Adaptive Estimation and Control of Models for Battery Electrochemistry

Scott Moura, Ph.D.

UC President's Postdoctoral Fellow
Cymer Center for Control Systems and Dynamics
Mechanical & Aerospace Engineering
UC San Diego

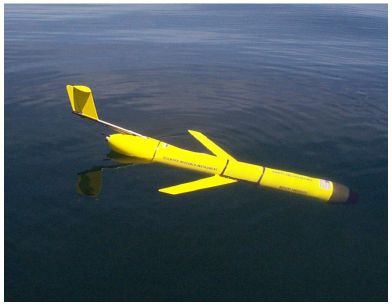
October 5, 2012



A Golden Era


ST. JUDE MEDICAL
Sylmar, CA USA
ACCENT SR RF
PM1210 SSR
ST. JUDE MEDICAL
Sylmar, CA USA
ANTHEM RF
PM3212 DDDRV





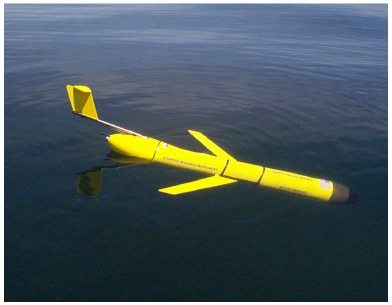



A123 SYSTEMS
2MWH-APU
HYBRID ANCILLARY POWER UNIT

A Golden Era



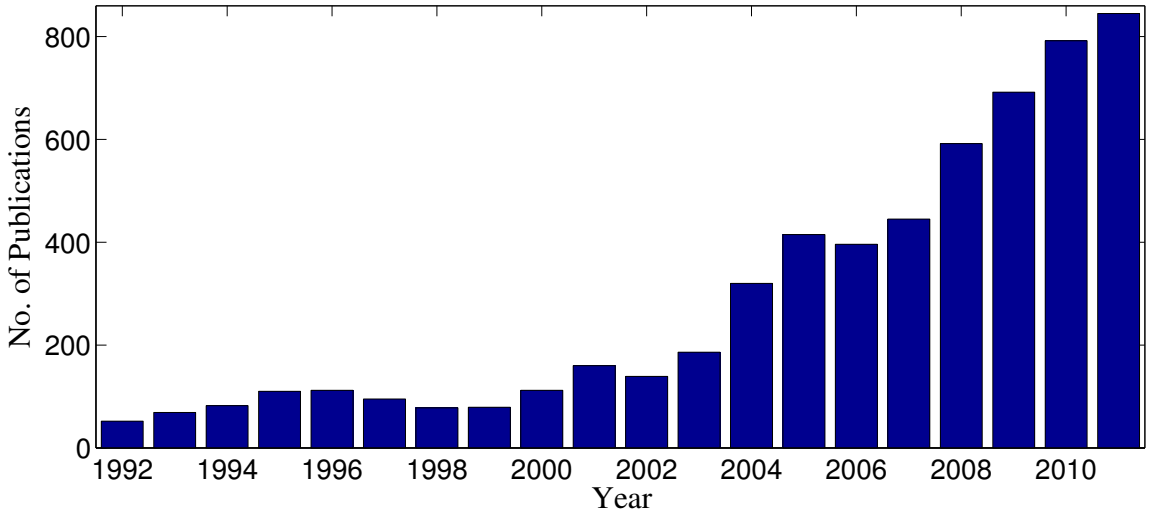








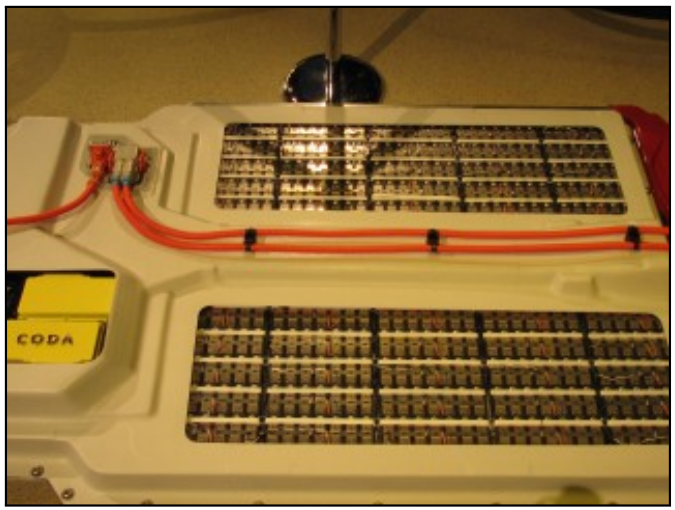
Keyword: “Battery Systems and Control”



Open Problems in Energy Storage and Control

Battery Management Systems

- Modeling & Identification
- SOC/SOH Estimation
- Constrained Control
- ...



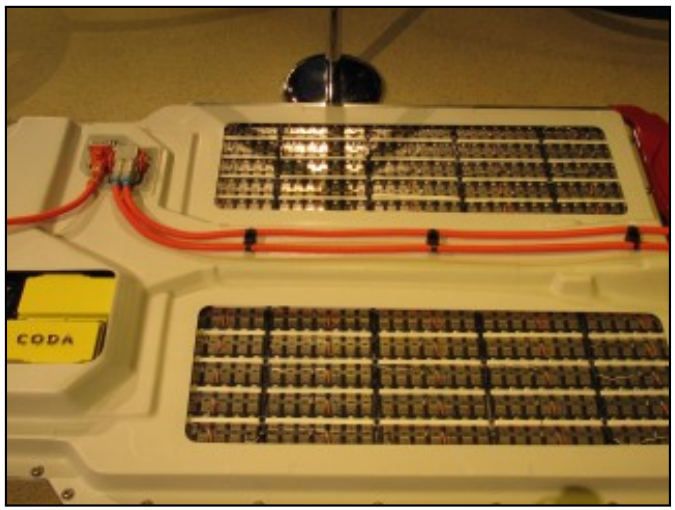
Open Problems in Energy Storage and Control

Battery Management Systems

- Modeling & Identification
- SOC/SOH Estimation
- Constrained Control
- ...

Energy Storage in Smart Grid

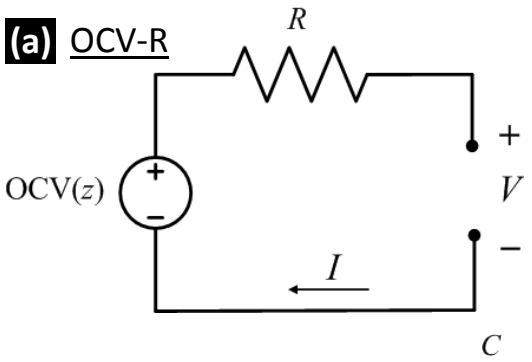
- Modeling & Design
- Hierarchical Control Framework
- Renewables
- ...





Battery Models

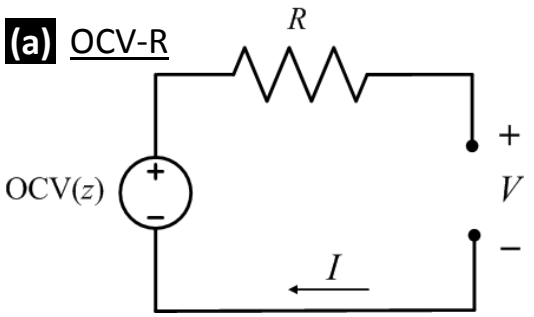
Equivalent Circuit Model



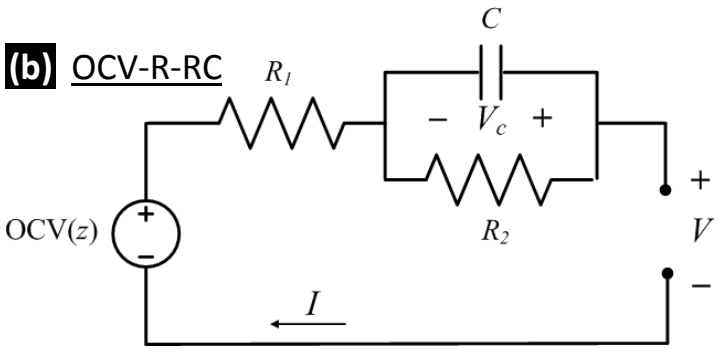
Battery Models

Equivalent Circuit Model

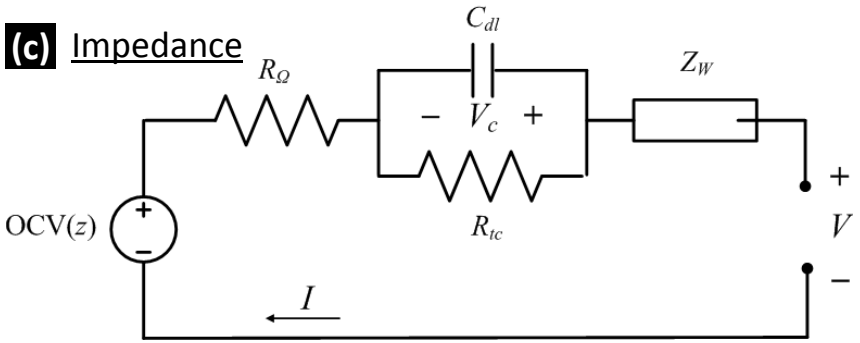
(a) OCV-R



(b) OCV-R-RC

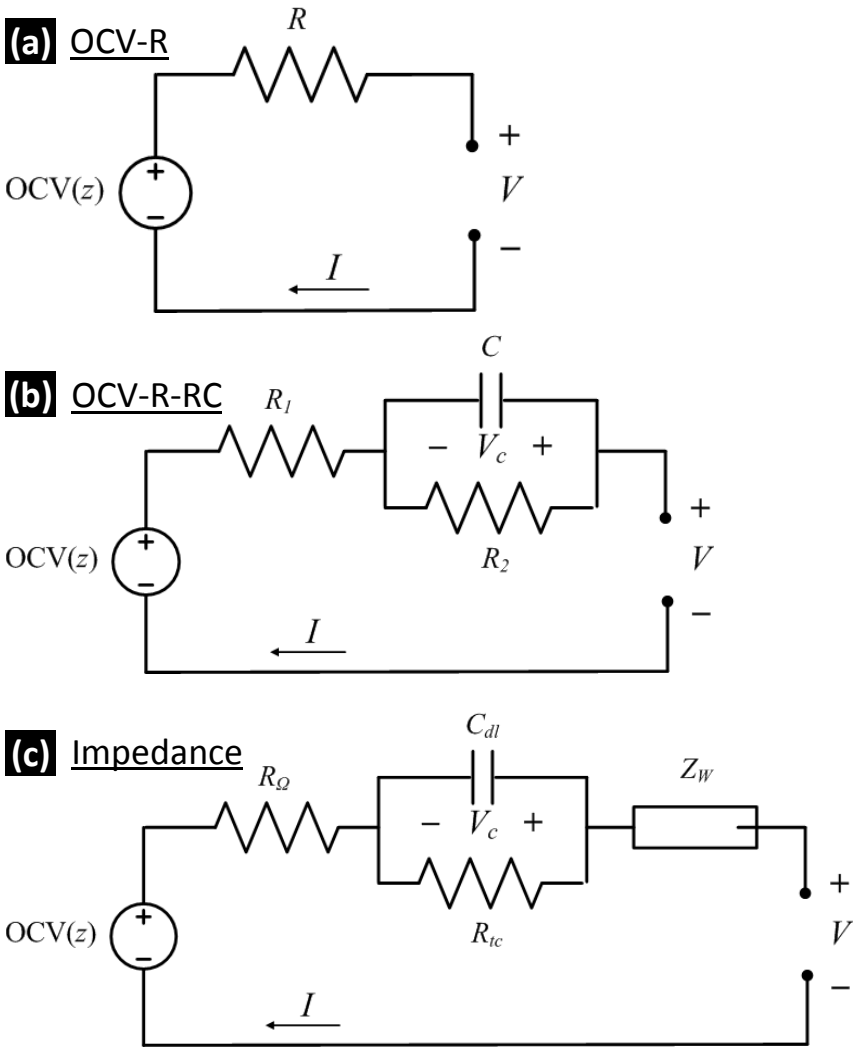


(c) Impedance

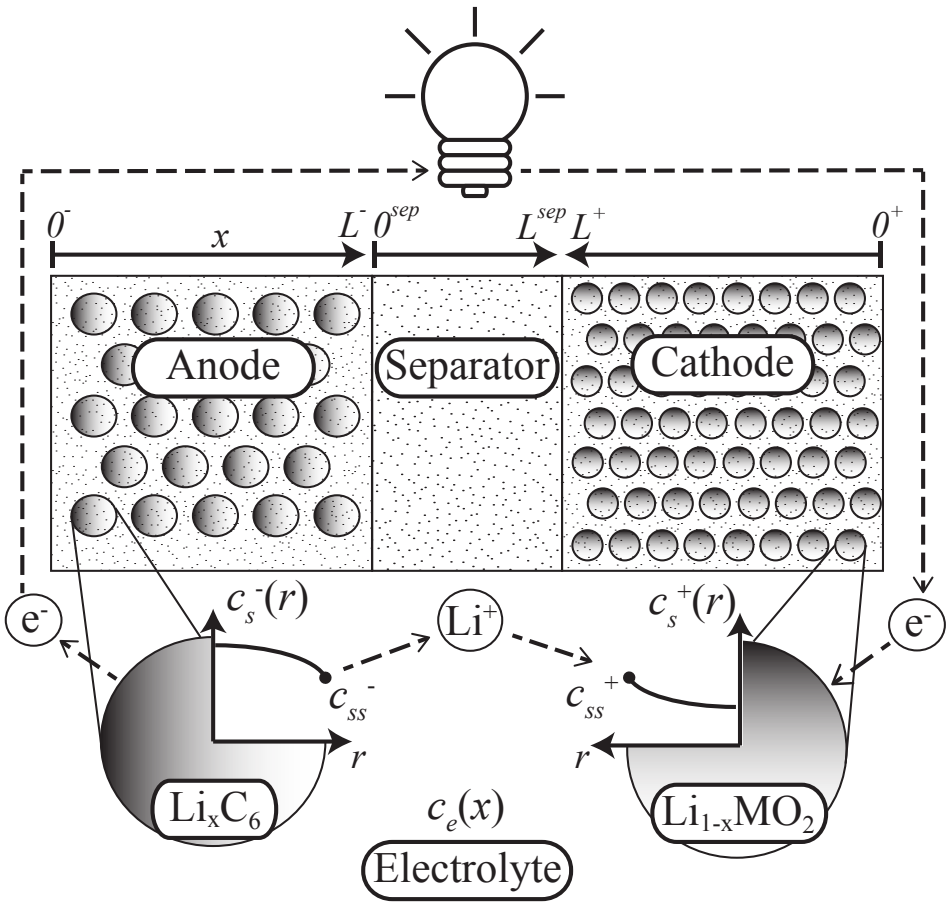


Battery Models

Equivalent Circuit Model

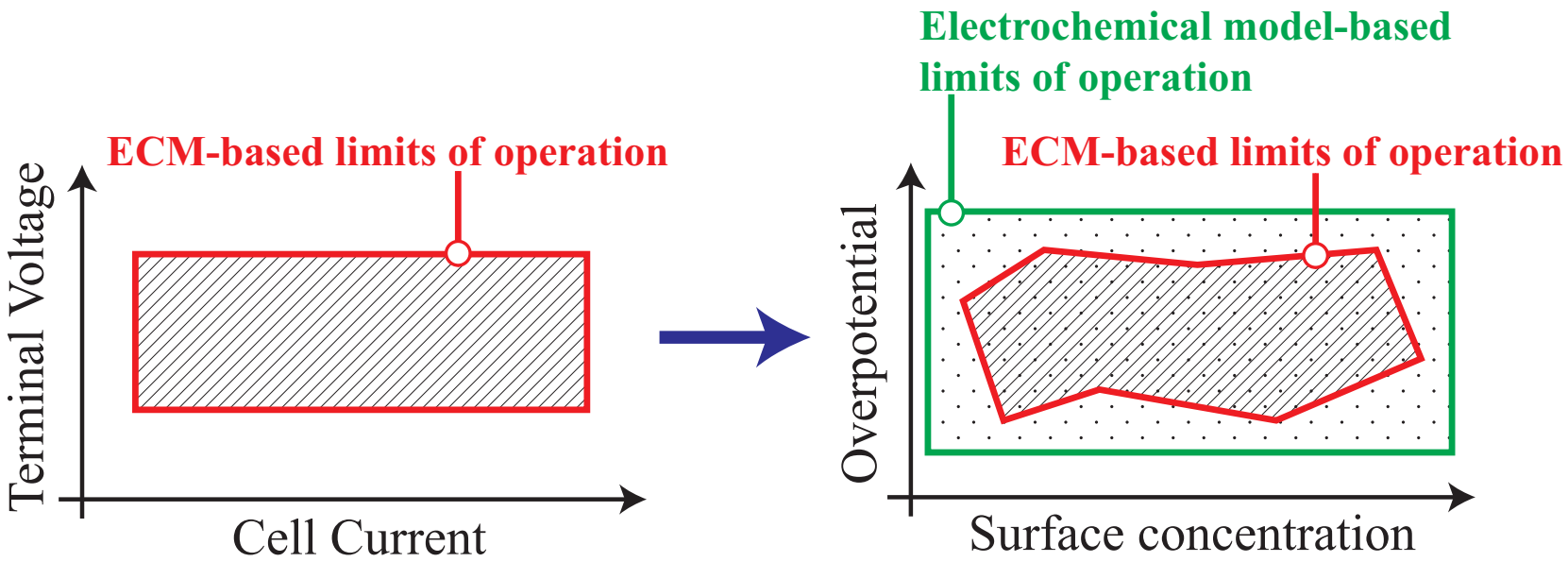


Electrochemical Model





Operate Batteries at their Physical Limits



Electrochemical Model Equations

well, some of them

Description	**Equation**
Solid phase Li concentration	$\frac{\partial c_s^{\pm}}{\partial t}(x,r,t) = \frac{1}{r^2}\frac{\partial}{\partial r}\left[D_s^{\pm} r^2 \frac{\partial c_s^{\pm}}{\partial r}(x,r,t)\right]$
Electrolyte Li concentration	$\varepsilon_e \frac{\partial c_e}{\partial t}(x,t) = \frac{\partial}{\partial x}\left[\varepsilon_e D_e \frac{\partial c_e}{\partial x}(x,t) + \frac{1-t_c^0}{F} i_e^{\pm}(x,t)\right]$
Solid potential	$\frac{\partial \phi_s^{\pm}}{\partial x}(x,t) = \frac{i_e^{\pm}(x,t) - I(t)}{\sigma^{\pm}}$
Electrolyte potential	$\frac{\partial \phi_e}{\partial x}(x,t) = -\frac{i_e^{\pm}(x,t)}{\kappa} + \frac{2RT}{F}(1-t_c^0)\left(1 + \frac{d\ln f_{c/a}}{d\ln c_e}(x,t)\right)\frac{\partial \ln c_e}{\partial x}(x,t)$
Electrolyte ionic current	$\frac{\partial i_e^{\pm}}{\partial x}(x,t) = a_s F j_n^{\pm}(x,t)$
Molar flux btw phases	$j_n^{\pm}(x,t) = \frac{1}{F} i_0^{\pm}(x,t)\left[e^{\frac{\alpha_a F}{RT}\eta^{\pm}(x,t)} - e^{-\frac{\alpha_c F}{RT}\eta^{\pm}(x,t)}\right]$
Temperature	$\rho c_P \frac{dT}{dt}(t) = h\left[T^0(t) - T(t)\right] + I(t)V(t) - \int_{0^-}^{0^+} a_s F j_n(x,t)\Delta T(x,t)dx$

Animation of Li Ion Evolution

Outline

Outline

A Short History

- Equivalent Circuit Model

- Electrochemical Model

A Short History

- Equivalent Circuit Model
  - G. Plett (2004) - Extended Kalman Filter (States & Params)
  - RLS, Bias-correcting RLS, EKF on Impedance-based ECMs, LPV, Neural nets, Sliding-mode, Particle filters, and many more...
- Electrochemical Model

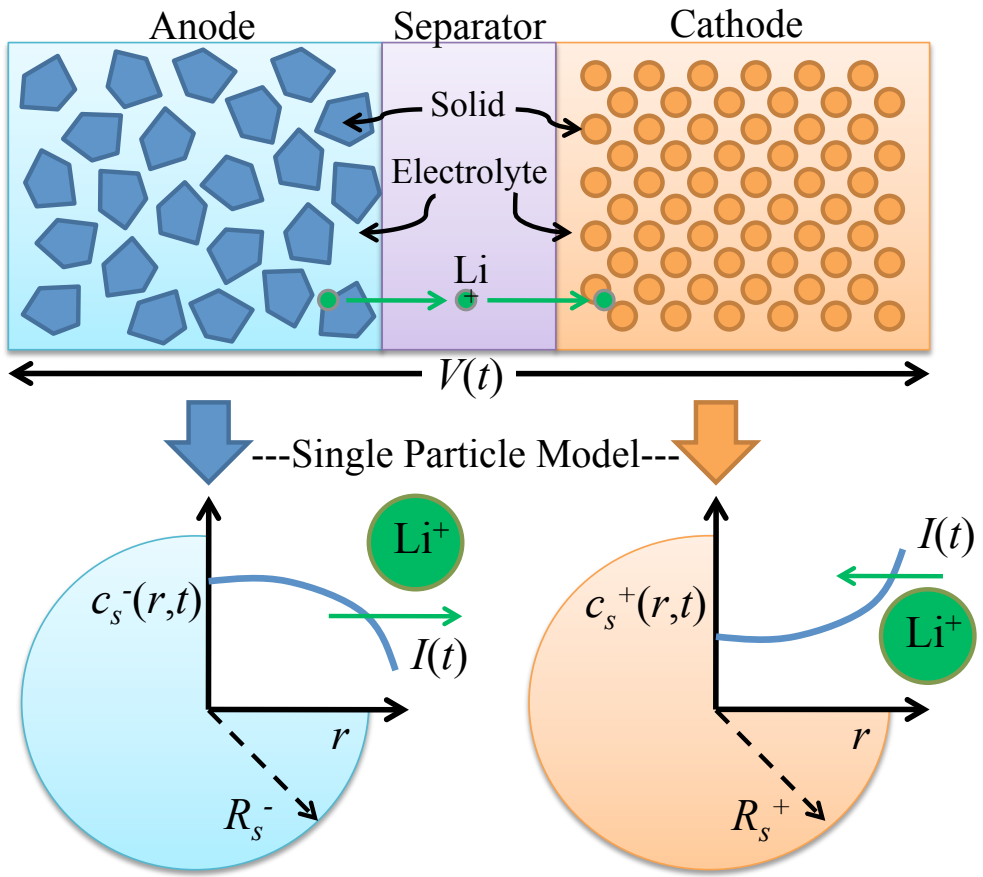
A Short History

- Equivalent Circuit Model
  - G. Plett (2004) - Extended Kalman Filter (States & Params)
  - RLS, Bias-correcting RLS, EKF on Impedance-based ECMs, LPV, Neural nets, Sliding-mode, Particle filters, and many more...
- Electrochemical Model
  - R. White (2006) - EKF on Single Particle Model (States)
  - K. Smith (2008) - KF on Reduced Freq. Domain Model (States)
  - A. Stefanopoulou (2010) - EKF on Electrode Avg Model (States)
  - R. Klein (2012) - Luenburger Observer on reduced PDE Model (States)

A Short History

- Equivalent Circuit Model
  - G. Plett (2004) - Extended Kalman Filter (States & Params)
  - RLS, Bias-correcting RLS, EKF on Impedance-based ECMs, LPV, Neural nets, Sliding-mode, Particle filters, and many more...
- Electrochemical Model
  - R. White (2006) - EKF on Single Particle Model (States)
  - K. Smith (2008) - KF on Reduced Freq. Domain Model (States)
  - A. Stefanopoulou (2010) - EKF on Electrode Avg Model (States)
  - R. Klein (2012) - Luenburger Observer on reduced PDE Model (States)
  - S. Moura (2012) - Adaptive PDE Observer on SPM (States & Params)

Single Particle Model (SPM)

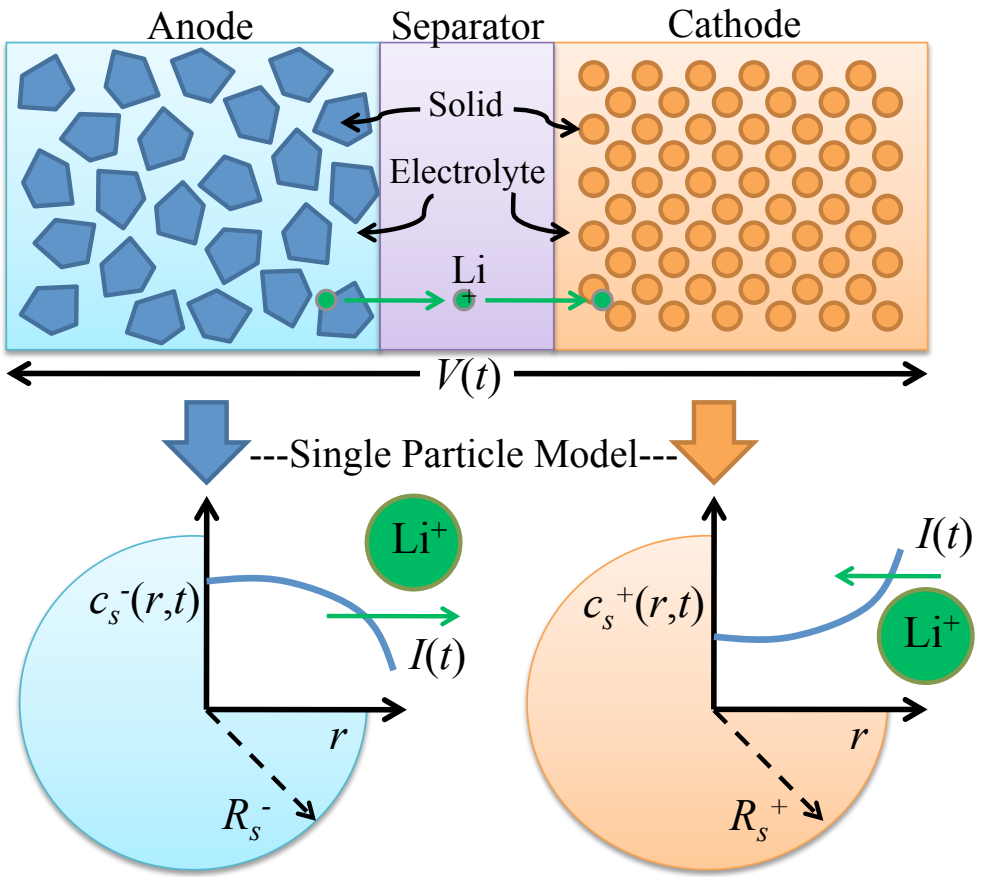


Single Particle Model (SPM)

Diffusion of Li in solid phase:

$$\frac{\partial c_s^-}{\partial t}(r,t) = \frac{D_s^-}{r^2}\frac{\partial}{\partial r}\left[r^2\frac{\partial^2 c_s^-}{\partial r^2}(r,t)\right]$$

$$\frac{\partial c_s^+}{\partial t}(r,t) = \frac{D_s^+}{r^2}\frac{\partial}{\partial r}\left[r^2\frac{\partial^2 c_s^+}{\partial r^2}(r,t)\right]$$



Single Particle Model (SPM)

Diffusion of Li in solid phase:

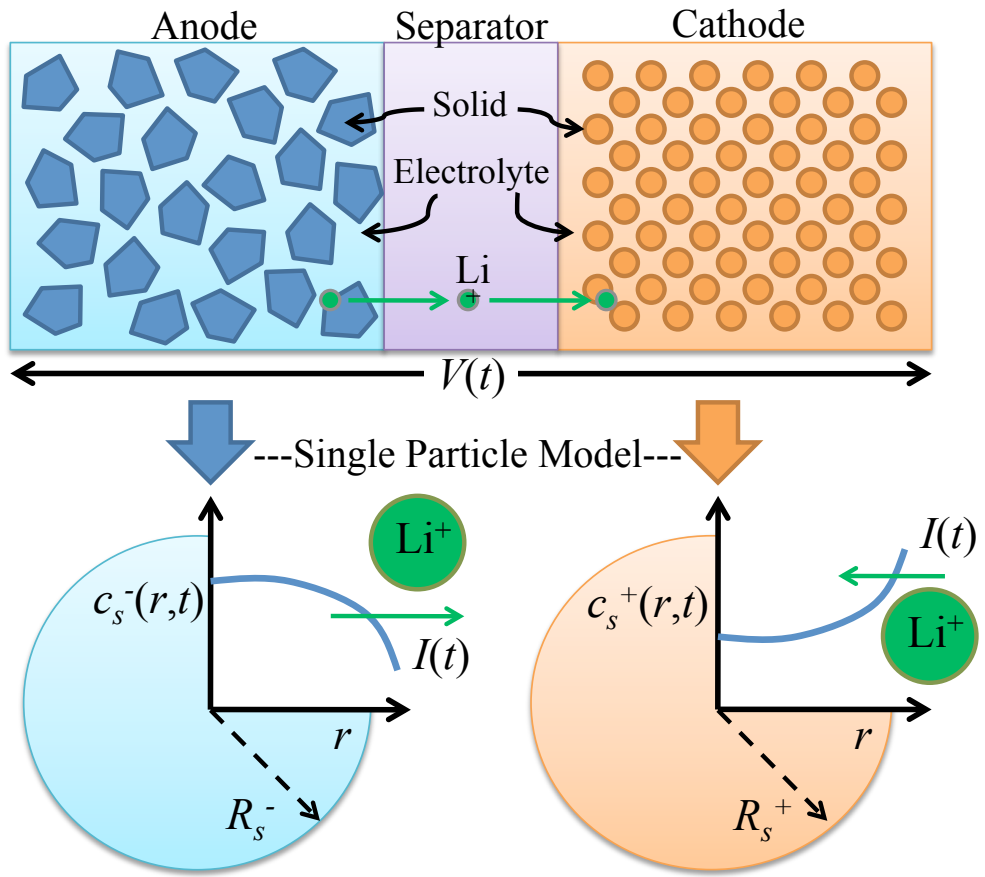
$$\frac{\partial c_s^-}{\partial t}(r,t) = \frac{D_s^-}{r^2}\frac{\partial}{\partial r}\left[r^2\frac{\partial^2 c_s^-}{\partial r^2}(r,t)\right]$$

$$\frac{\partial c_s^+}{\partial t}(r,t) = \frac{D_s^+}{r^2}\frac{\partial}{\partial r}\left[r^2\frac{\partial^2 c_s^+}{\partial r^2}(r,t)\right]$$

Boundary conditions:

$$\frac{\partial c_s^-}{\partial r}(R_s^-,t) = -\rho^+ I(t)$$

$$\frac{\partial c_s^+}{\partial r}(R_s^+,t) = \rho^- I(t)$$



Single Particle Model (SPM)

Diffusion of Li in solid phase:

$$\frac{\partial c_s^-}{\partial t}(r,t) = \frac{D_s^-}{r^2}\frac{\partial}{\partial r}\left[r^2\frac{\partial^2 c_s^-}{\partial r^2}(r,t)\right]$$

$$\frac{\partial c_s^+}{\partial t}(r,t) = \frac{D_s^+}{r^2}\frac{\partial}{\partial r}\left[r^2\frac{\partial^2 c_s^+}{\partial r^2}(r,t)\right]$$

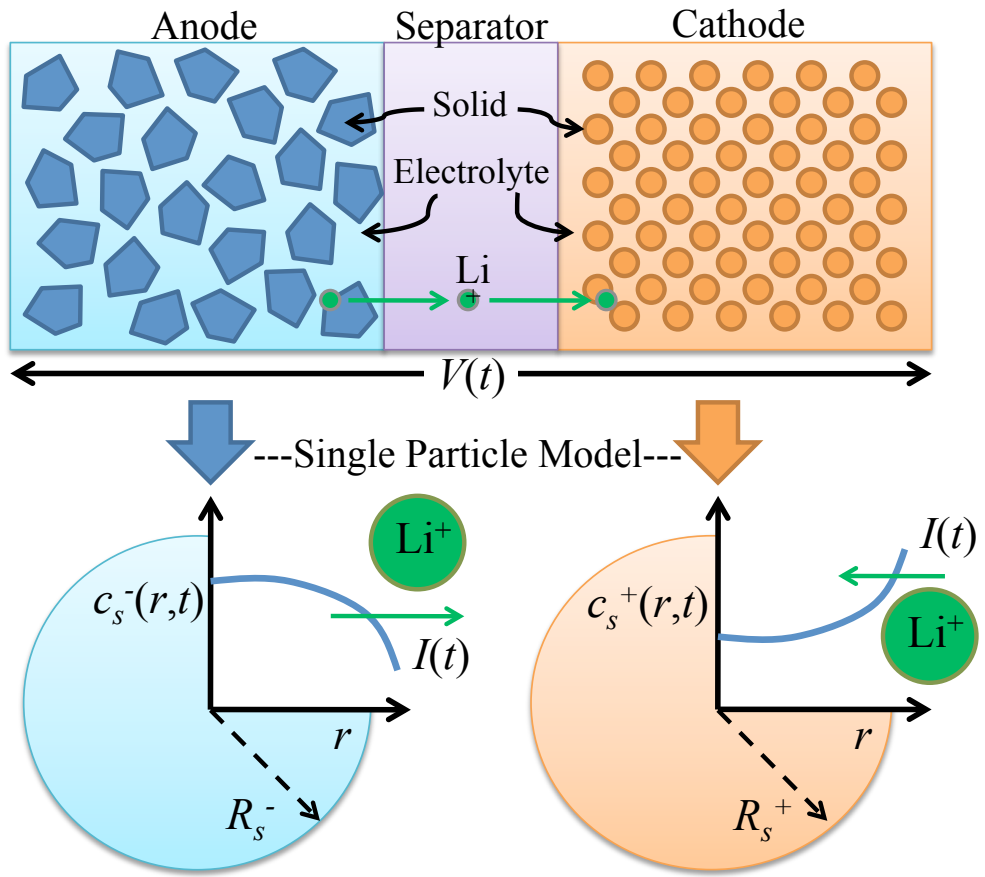
Boundary conditions:

$$\frac{\partial c_s^-}{\partial r}(R_s^-,t) = -\rho^+ I(t)$$

$$\frac{\partial c_s^+}{\partial r}(R_s^+,t) = \rho^- I(t)$$

Voltage Output Function:

$$V(t) = h(c_{ss}^-(t), c_{ss}^+(t), I(t); \theta)$$



Single Particle Model (SPM)

Diffusion of Li in solid phase:

$$\frac{\partial c_s^-}{\partial t}(r,t) = \frac{D_s^-}{r^2}\frac{\partial}{\partial r}\left[r^2\frac{\partial^2 c_s^-}{\partial r^2}(r,t)\right]$$

$$\frac{\partial c_s^+}{\partial t}(r,t) = \frac{D_s^+}{r^2}\frac{\partial}{\partial r}\left[r^2\frac{\partial^2 c_s^+}{\partial r^2}(r,t)\right]$$

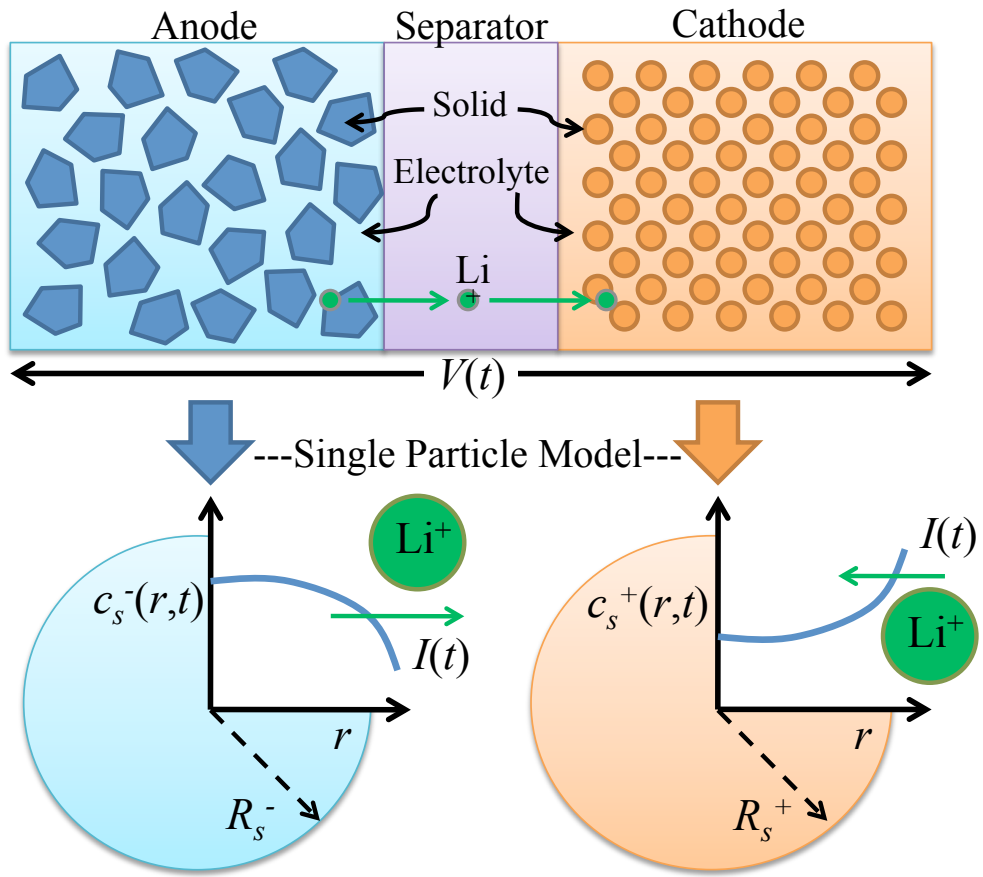
Boundary conditions:

$$\frac{\partial c_s^-}{\partial r}(R_s^-,t) = -\rho^+ I(t)$$

$$\frac{\partial c_s^+}{\partial r}(R_s^+,t) = \rho^- I(t)$$

Voltage Output Function:

$$V(t) = h(c_{ss}^-(t), c_{ss}^+(t), I(t); \theta)$$



Definitions

- SOC: Bulk concentration SOC_{bulk}, Surface concentration $c_{ss}^-(t)$
- SOH: Physical parameters, e.g. ε, q, n_{Li}, R_f

The SOC Estimation Problem

Problem Statement

Estimate states $c_s^-(r,t), c_s^+(r,t)$ from measurements $I(t), V(t)$ and SPM

The SOC Estimation Problem

Problem Statement

Estimate states $c_s^-(r,t), c_s^+(r,t)$ from measurements $I(t), V(t)$ and SPM

Simplify the Math

- Model reduction to achieve observability
- Normalize time and space
- State transformation

The SOC Estimation Problem

Problem Statement

Estimate states $c_s^-(r,t), c_s^+(r,t)$ from measurements $I(t), V(t)$ and SPM

Simplify the Math

- Model reduction to achieve observability
- Normalize time and space
- State transformation

Observer Model Equations

$$\frac{\partial c}{\partial t}(r,t) = \varepsilon \frac{\partial^2 c}{\partial r^2}(r,t) \qquad \text{Heat PDE}$$

$$c(0,t) = 0$$

$$\frac{\partial c}{\partial r}(1,t) - c(1,t) = -q\rho I(t)$$

$$\text{Measurement} = c(1,t) = \check{c}_{ss}^-(t)$$

Backstepping PDE Estimator

Estimator

$$
\begin{aligned}
\frac{\partial \hat{c}}{\partial t}(r,t) &= \varepsilon \frac{\partial^2 \hat{c}}{\partial r^2}(r,t) + p_1(r)\left[\check{c}_{ss}^{-}(t) - \hat{c}(1,t)\right] \\
\hat{c}(0,t) &= 0 \\
\frac{\partial \hat{c}}{\partial r}(1,t) - \hat{c}(1,t) &= -q\rho I(t) + p_{10}\left[\check{c}_{ss}^{-}(t) - \hat{c}(1,t)\right] \\
\tilde{c}(1,t) &= c(1,t) - \hat{c}(1,t)
\end{aligned}
$$

Backstepping PDE Estimator

Estimator

$$\begin{aligned}
\frac{\partial \hat{c}}{\partial t}(r,t) &= \varepsilon \frac{\partial^2 \hat{c}}{\partial r^2}(r,t) + p_1(r)\left[\check{c}_{ss}^{-}(t) - \hat{c}(1,t)\right] \\
\hat{c}(0,t) &= 0 \\
\frac{\partial \hat{c}}{\partial r}(1,t) - \hat{c}(1,t) &= -q\rho I(t) + p_{10}\left[\check{c}_{ss}^{-}(t) - \hat{c}(1,t)\right] \\
\tilde{c}(1,t) &= c(1,t) - \hat{c}(1,t)
\end{aligned}$$

Explicit Solution to Estimator Gains

$$p_1(r) = \frac{-\lambda r}{2\varepsilon z}\left[I_1(z) - \frac{2\lambda}{\varepsilon z} I_2(z)\right] \qquad \text{where} \quad z = \sqrt{\frac{\lambda}{\varepsilon}(r^2-1)}$$

$$p_{10} = \frac{1}{2}\left(3 - \frac{\lambda}{\varepsilon}\right)$$

The SOH Estimation Problem

Problem Statement

Estimate physical parameters from measurements $I(t), V(t)$ and SPM

The SOH Estimation Problem

Problem Statement

Estimate physical parameters from measurements $I(t), V(t)$ and SPM

Relate uncertain parameters to SOH-related concepts

- Capacity fade
- Power fade

The SOH Estimation Problem

Problem Statement

Estimate physical parameters from measurements $I(t), V(t)$ and SPM

Relate uncertain parameters to SOH-related concepts

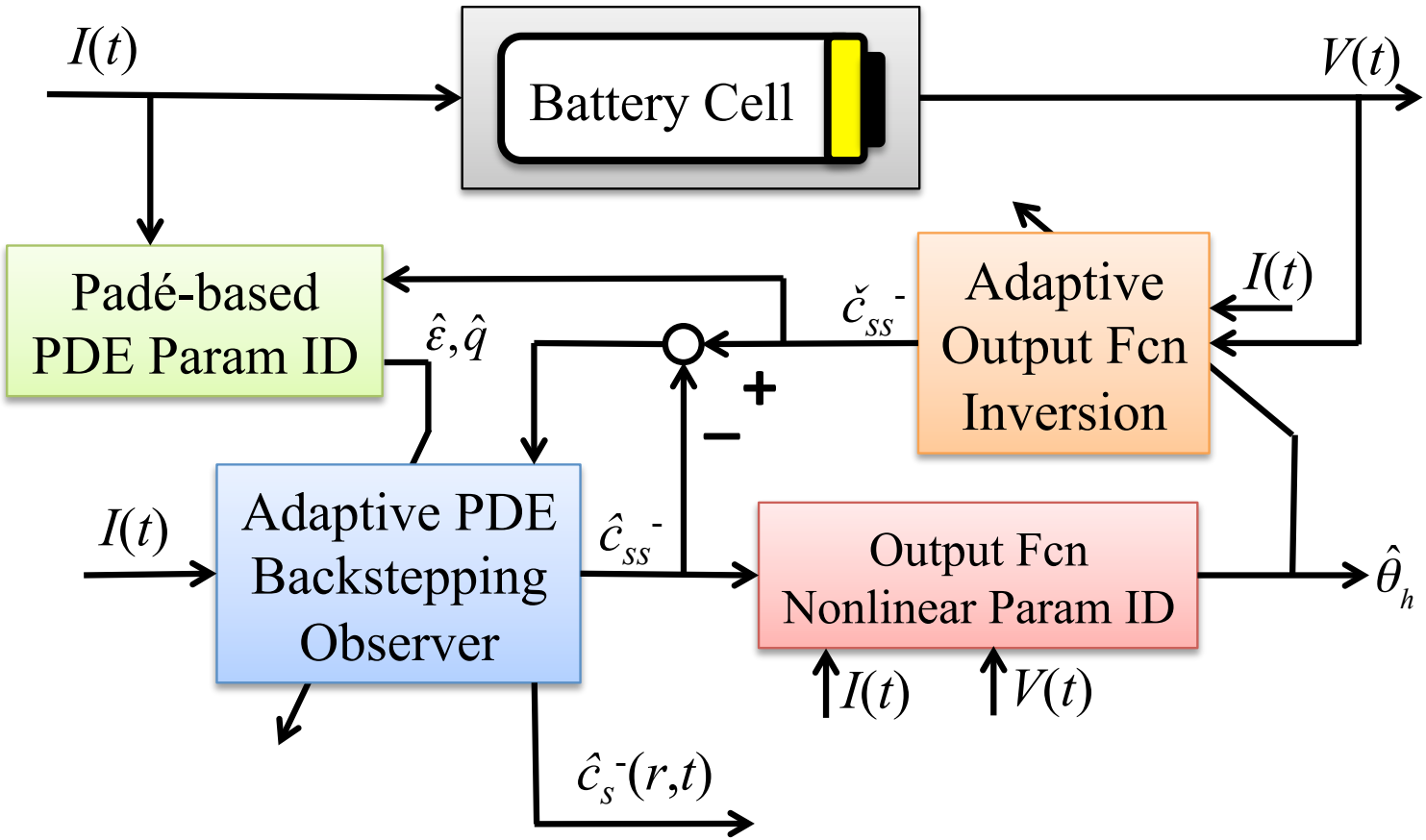
- Capacity fade
- Power fade

Technical Challenges

- PDE models
- Nonlinear in parameters

Adaptive Observer

Combined State & Parameter Estimation



Padé-based PDE Parameter Identification

PDE Model

$$\frac{\partial c}{\partial t}(r,t) = \varepsilon \frac{\partial^2 c}{\partial r^2}(r,t)$$

$$c(0,t) = 0$$

$$\frac{\partial c}{\partial r}(1,t) - c(1,t) = -q\rho I(t)$$

Padé-based PDE Parameter Identification

PDE Model

$$\frac{\partial c}{\partial t}(r,t) = \varepsilon \frac{\partial^2 c}{\partial r^2}(r,t)$$

$$c(0,t) = 0$$

$$\frac{\partial c}{\partial r}(1,t) - c(1,t) = -q\rho I(t)$$

Challenge for adaptive observers:

- Cannot re-express model such that ε multiplies measured signals

Padé-based PDE Parameter Identification

PDE Model

$$\frac{\partial c}{\partial t}(r,t) = \varepsilon \frac{\partial^2 c}{\partial r^2}(r,t)$$
$$c(0,t) = 0$$
$$\frac{\partial c}{\partial r}(1,t) - c(1,t) = -q\rho I(t)$$

Challenge for adaptive observers:

- Cannot re-express model such that ε multiplies measured signals

Main Idea:

- Approximate PDE transfer function via Padé representation

$$\frac{c_{ss}(s)}{I(s)} = \frac{-q\rho \sinh\left(\sqrt{\frac{s}{\varepsilon}}\right)}{\left(\sqrt{\frac{s}{\varepsilon}}\right)\cosh\left(\sqrt{\frac{s}{\varepsilon}}\right) - \sinh\left(\sqrt{\frac{s}{\varepsilon}}\right)} \approx \frac{-3\rho q\varepsilon^2 - \frac{2}{7}\rho q\varepsilon s}{\varepsilon s + \frac{1}{35}s^2}$$

Padé-based PDE Parameter Identification

PDE Model

$$\frac{\partial c}{\partial t}(r,t) = \varepsilon \frac{\partial^2 c}{\partial r^2}(r,t)$$
$$c(0,t) = 0$$
$$\frac{\partial c}{\partial r}(1,t) - c(1,t) = -q\rho I(t)$$

Challenge for adaptive observers:

- Cannot re-express model such that ε multiplies measured signals

Main Idea:

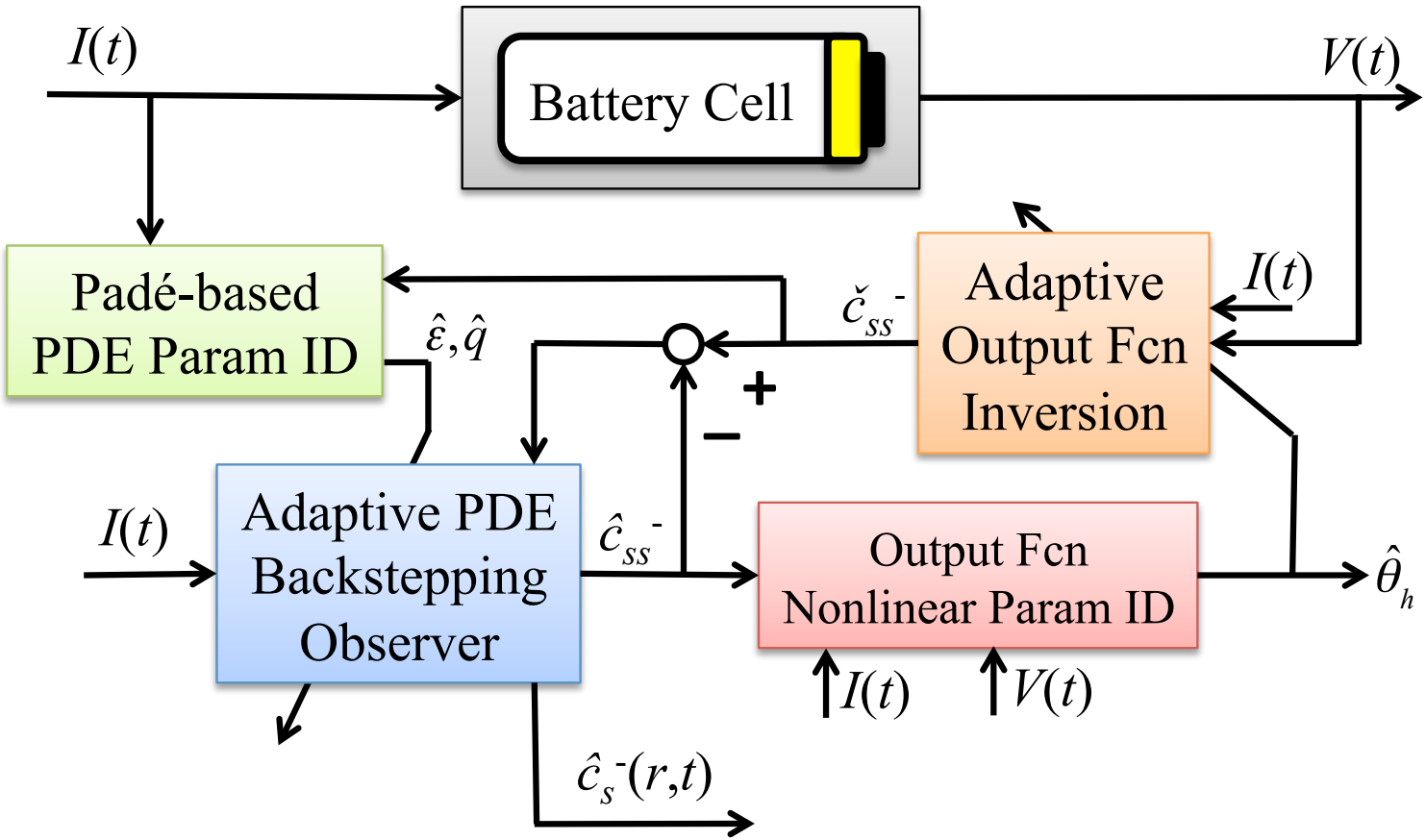
- Approximate PDE transfer function via Padé representation

$$\frac{c_{ss}(s)}{I(s)} = \frac{-q\rho \sinh\left(\sqrt{\frac{s}{\varepsilon}}\right)}{\left(\sqrt{\frac{s}{\varepsilon}}\right)\cosh\left(\sqrt{\frac{s}{\varepsilon}}\right) - \sinh\left(\sqrt{\frac{s}{\varepsilon}}\right)} \approx \frac{-3\rho q\varepsilon^2 - \frac{2}{7}\rho q\varepsilon s}{\varepsilon s + \frac{1}{35}s^2}$$

Enables the application of standard (e.g. least squares) parameter identification tools applied to vector $\theta_{pde} = [\varepsilon, q\varepsilon, q\varepsilon^2]^T$

Adaptive Observer

Combined State & Parameter Estimation



Output Function Nonlinear Parameter ID

Nonlinearly Parameterized Output

$$V(t) = h(c_{ss}^{-}(t), I(t); \theta)$$

- θ contains many parameters
- Linear dependence between parameters?

Output Function Nonlinear Parameter ID

Nonlinearly Parameterized Output

$$V(t) = h(c_{ss}^{-}(t), I(t); \theta)$$

- θ contains many parameters
- Linear dependence between parameters?

Identifiability Analysis Result

- Linearly independent parameter subset : $\theta_h = [n_{Li}, R_f]^T$
  - n_{Li} : Total amount of cyclable Li (Capacity Fade)
  - R_f : Resistance of current collectors, electrolyte, etc. (Power Fade)

Output Function Nonlinear Parameter ID

Nonlinearly Parameterized Output

$$V(t) = h(c_{ss}^{-}(t), I(t); \theta)$$

- θ contains many parameters
- Linear dependence between parameters?

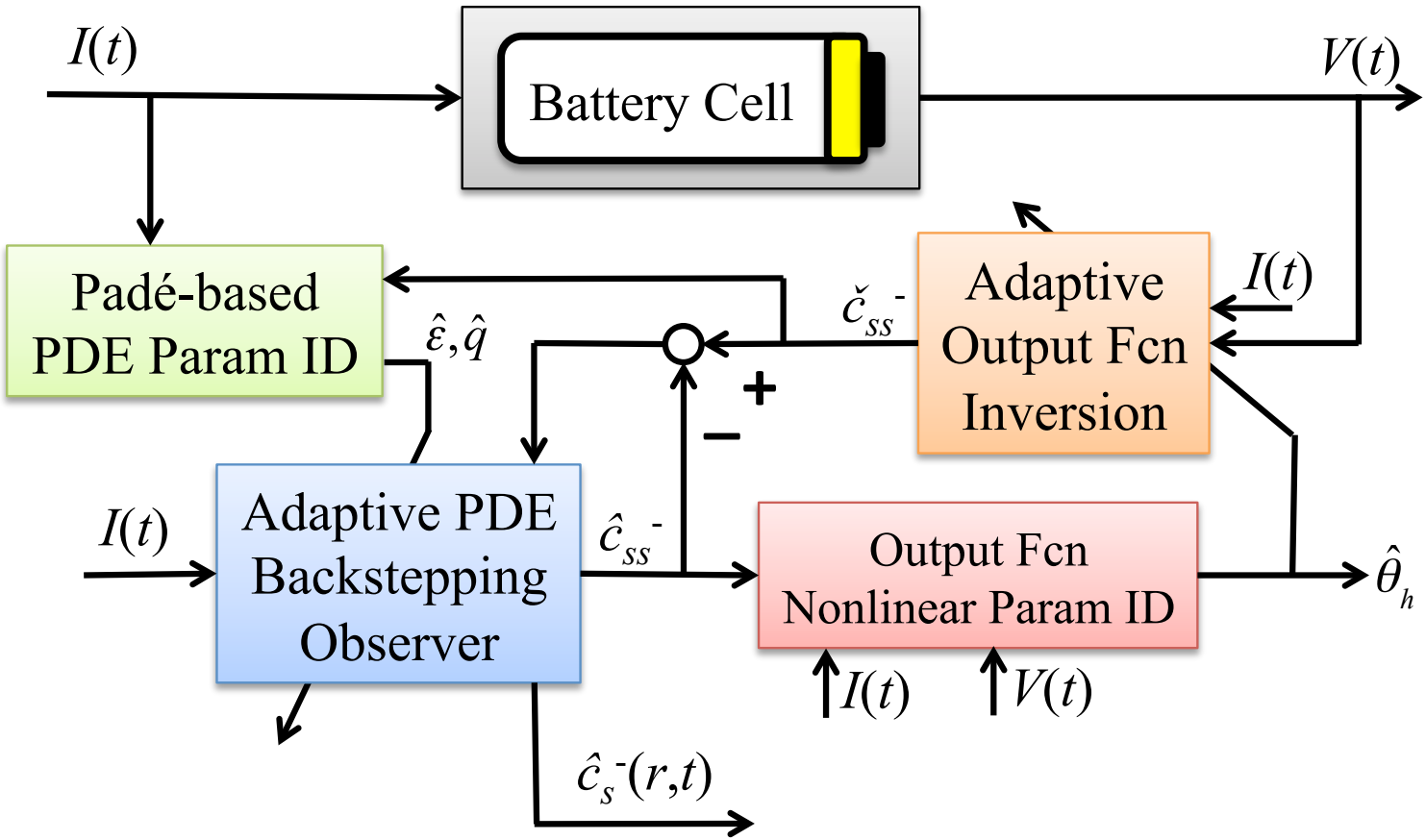
Identifiability Analysis Result

- Linearly independent parameter subset : $\theta_h = [n_{Li}, R_f]^T$
  - n_{Li} : Total amount of cyclable Li (Capacity Fade)
  - R_f : Resistance of current collectors, electrolyte, etc. (Power Fade)

Enables the application of nonlinear least squares parameter identification tools applied to vector θ_h

Adaptive Observer

Combined State & Parameter Estimation



Adaptive Output Function Inversion

Recall state observer requires boundary value $c_{ss}^{-}(t)$ for output error injection

Adaptive Output Function Inversion

Recall state observer requires boundary value $c_{ss}^{-}(t)$ for output error injection

Nonlinear Function Inversion

Solve $g(c_{ss}^{-}, t) = 0$ for c_{ss}^{-}, where

$$g(c_{ss}^{-}, t) = h(c_{ss}^{-}(t), I(t); \hat{\theta}_h) - V(t)$$

Adaptive Output Function Inversion

Recall state observer requires boundary value $c_{ss}^{-}(t)$ for output error injection

Nonlinear Function Inversion

Solve $g(c_{ss}^{-},t)=0$ for c_{ss}^{-}, where

$$g(c_{ss}^{-},t)=h(c_{ss}^{-}(t),I(t);\hat{\theta}_h)-V(t)$$

Newton's Method

Main Idea: Construct ODE with exp. stable equilibrium $g(c_{ss}^{-},t)=0$

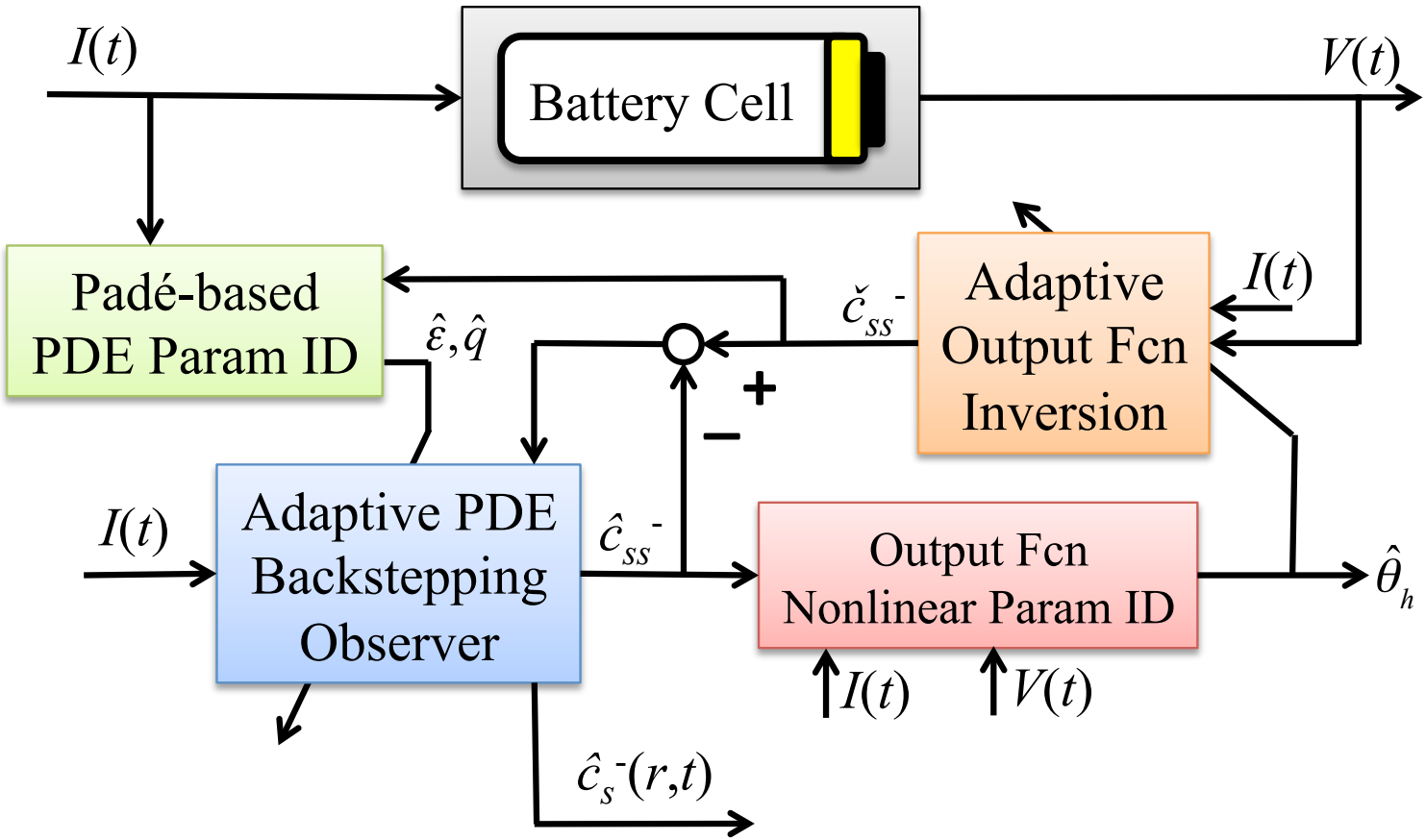
$$\frac{d}{dt}\left[g(\check{c}_{ss}^{-},t)\right]=-\gamma g(\check{c}_{ss}^{-},t)$$

which expands to a Newton's method update law:

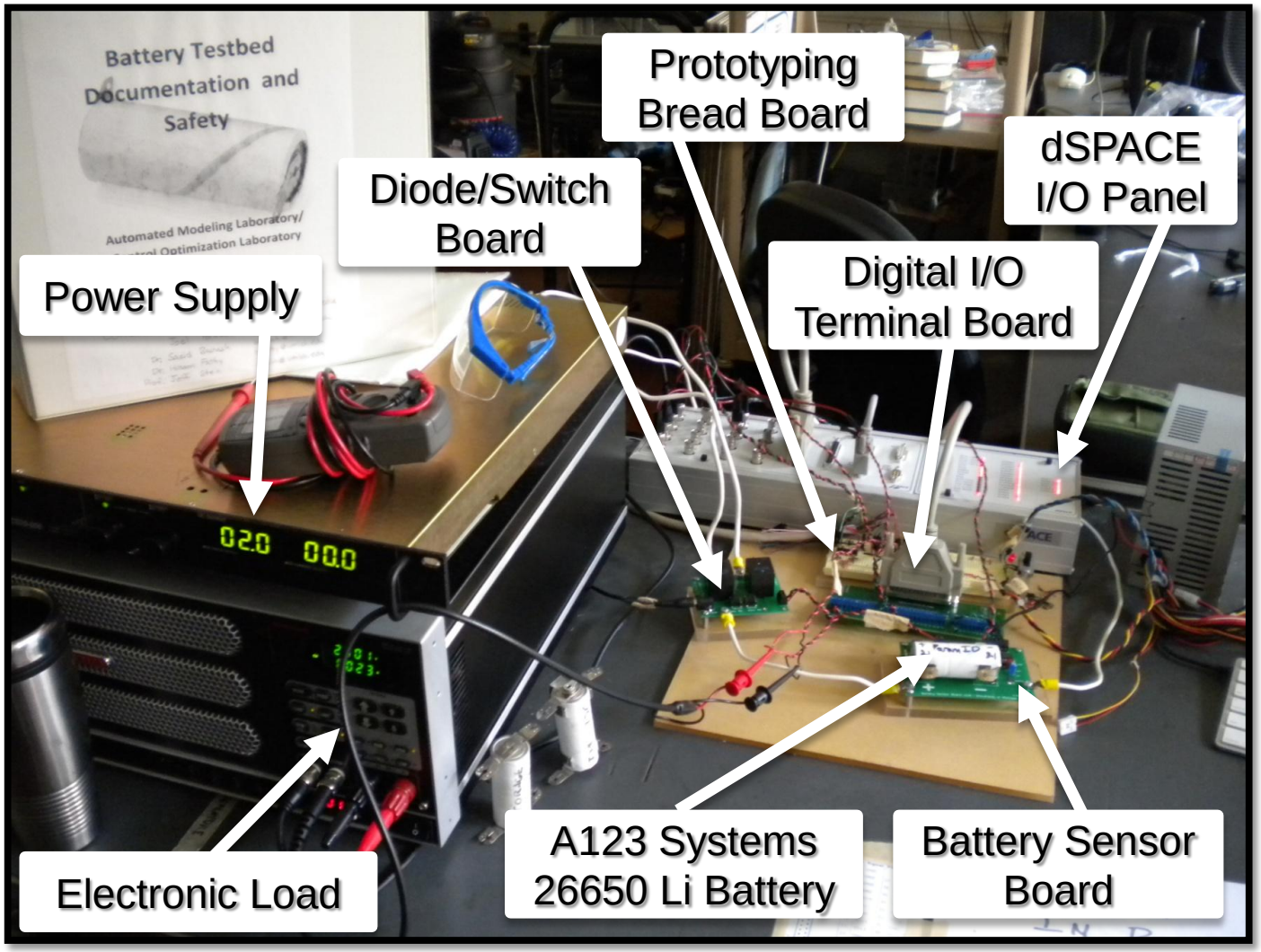
$$\frac{d}{dt}\check{c}_{ss}^{-}=-\frac{\gamma g(\check{c}_{ss}^{-},t)+\frac{\partial g}{\partial t}(\check{c}_{ss}^{-},t)}{\frac{\partial g}{\partial c_{ss}^{-}}(\check{c}_{ss}^{-},t)}$$

Adaptive Observer

Combined State & Parameter Estimation

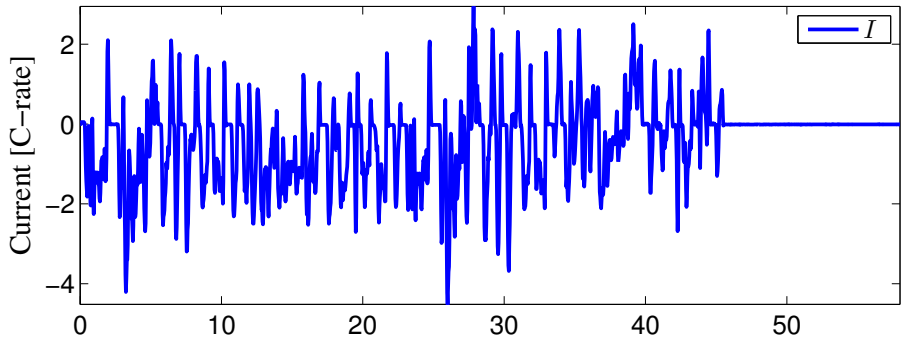


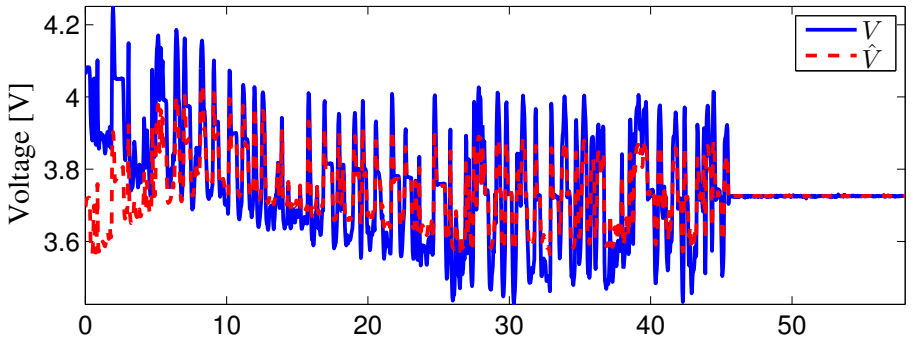
Custom-Built Battery-in-the-Loop Testbed

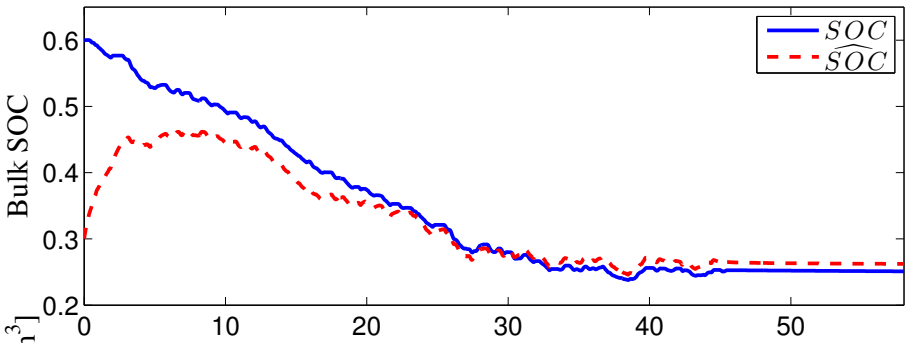


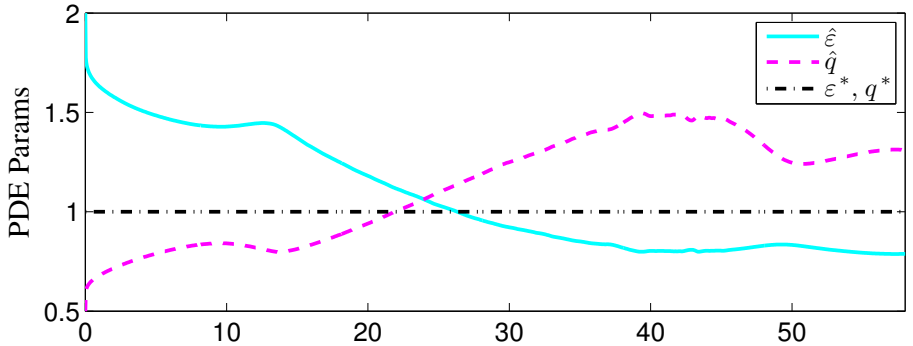
Results

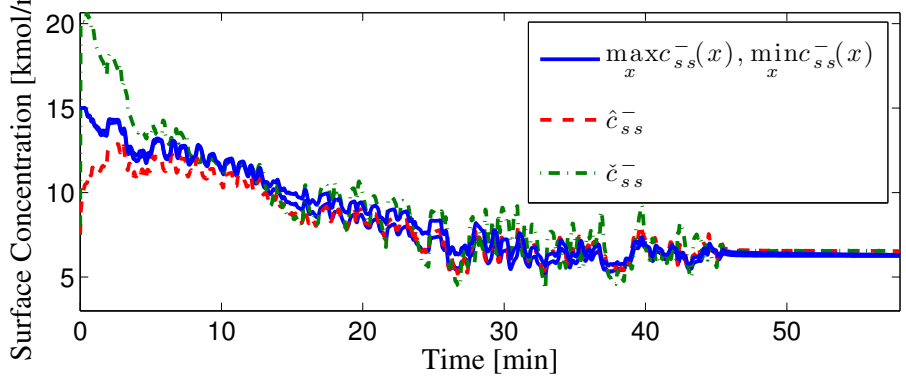
UDDS Drive Cycle Input

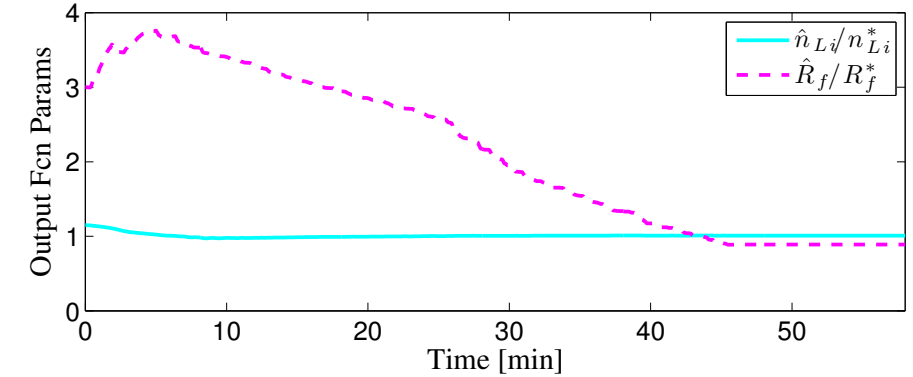






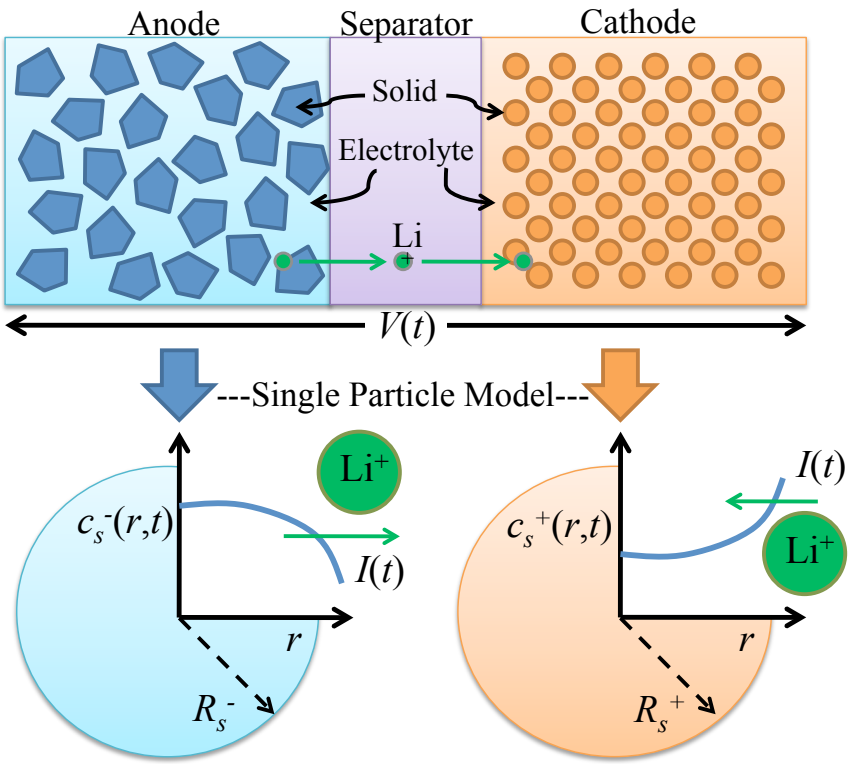




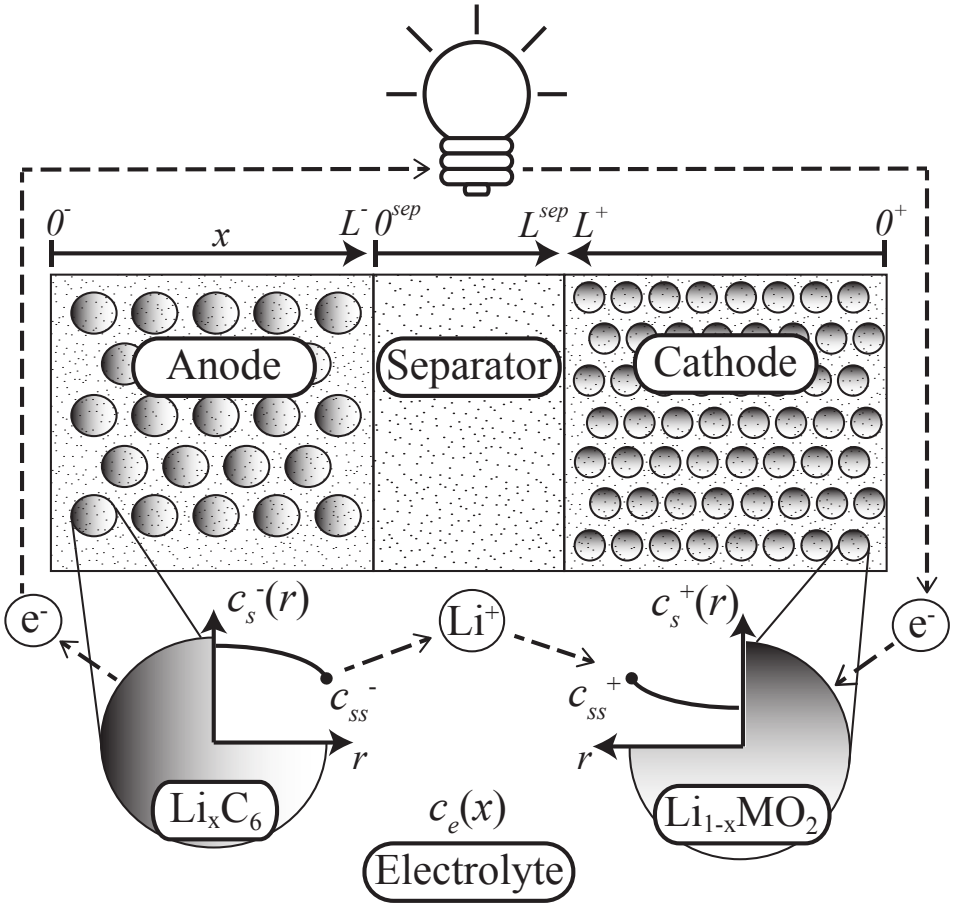


Estimator with Electrolyte Dynamics

Single Particle Model



Full Model w/ electrolyte



Outline

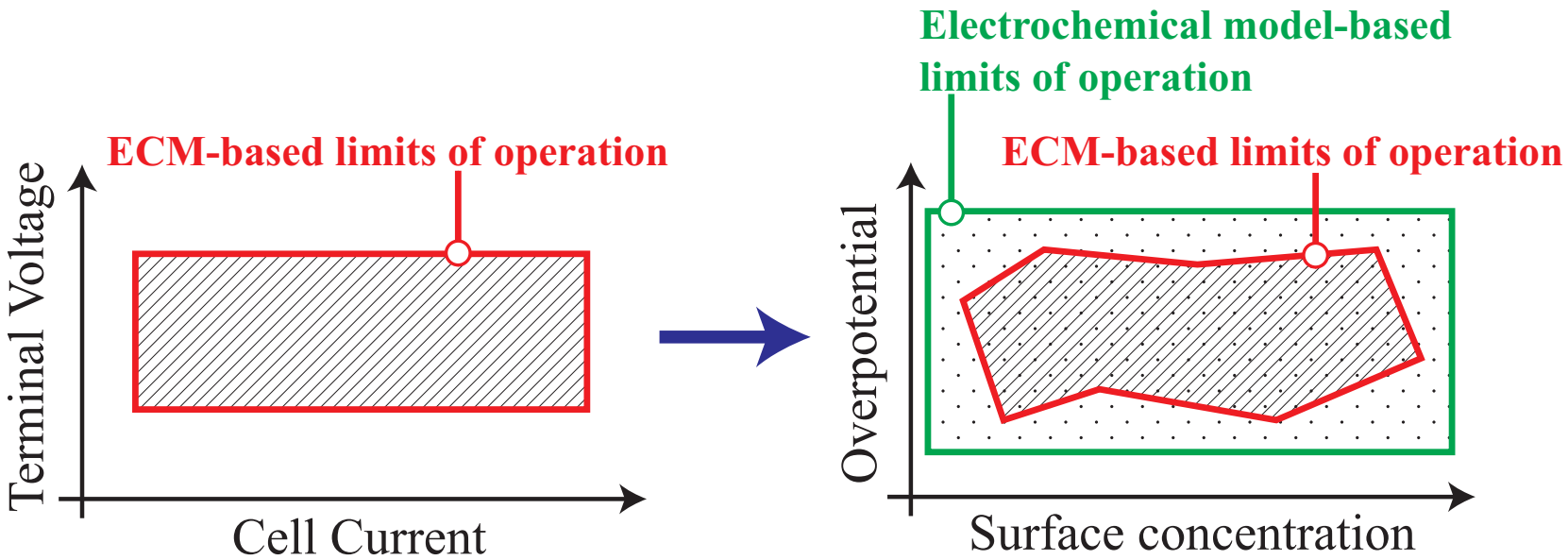
Operate Batteries at their Physical Limits



Operate Batteries at their Physical Limits

Problem Statement

Given accurate state estimates, govern the electric current such that safe operating constraints are satisfied.

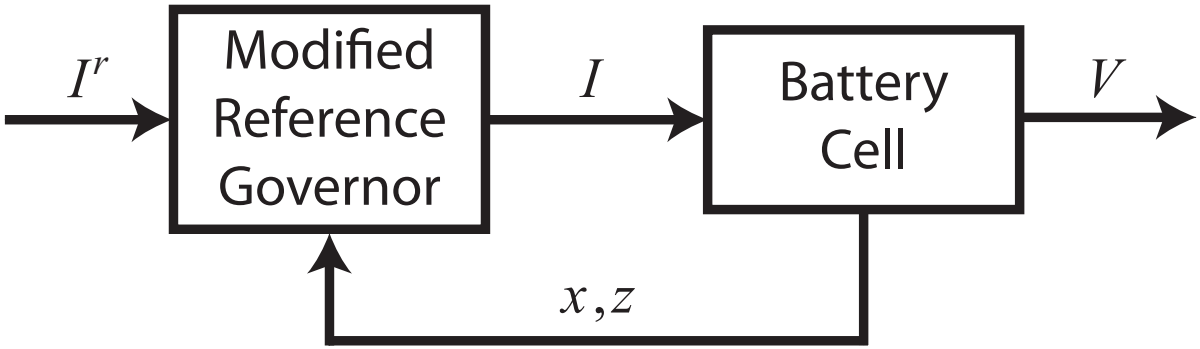


Constraints

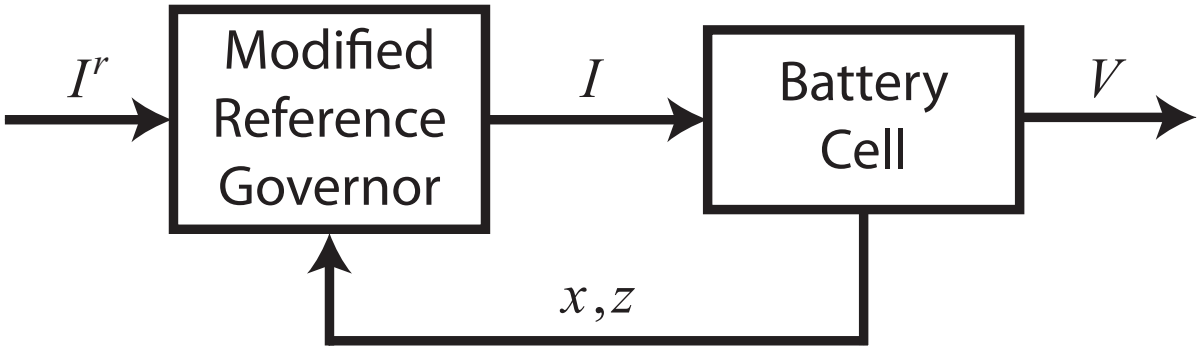
Variable	Definition	Constraint
$I(t)$	Current	Power electronics limits
$c_s^{\pm}(x,r,t)$	Li concentration in solid	Saturation/depletion
$\frac{\partial c_s^{\pm}}{\partial r}(x,r,t)$	Li concentration gradient	Diffusion-induced stress
$c_e(x,t)$	Li concentration in electrolyte	Saturation/depletion
$T(t)$	Temperature	High/low temps accel. aging
$\eta_s(x,t)$	Side-rxn overpotential	Li plating, dendrite formation

Each variable, y, must satisfy $y_{\min} \leq y \leq y_{\max}$.

The Algorithm: Modified Reference Governor (MRG)



The Algorithm: Modified Reference Governor (MRG)

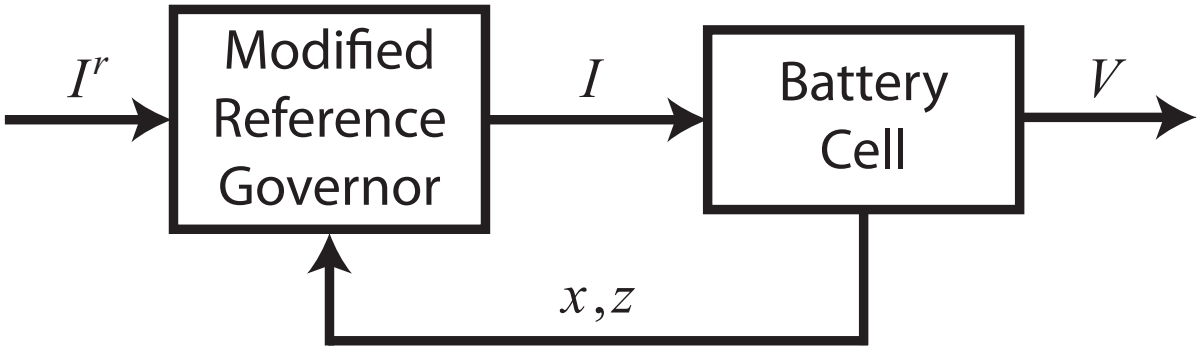


MRG Equations

$$I[k+1] = \beta^*[k] I^r[k], \qquad \beta^* \in [0,1],$$

$$\beta^*[k] = \max\{\beta \in [0,1] : (x(t), z(t)) \in \mathcal{O}\}$$

The Algorithm: Modified Reference Governor (MRG)



MRG Equations

$$I[k+1] = \beta^*[k] I^r[k], \qquad \beta^* \in [0,1],$$

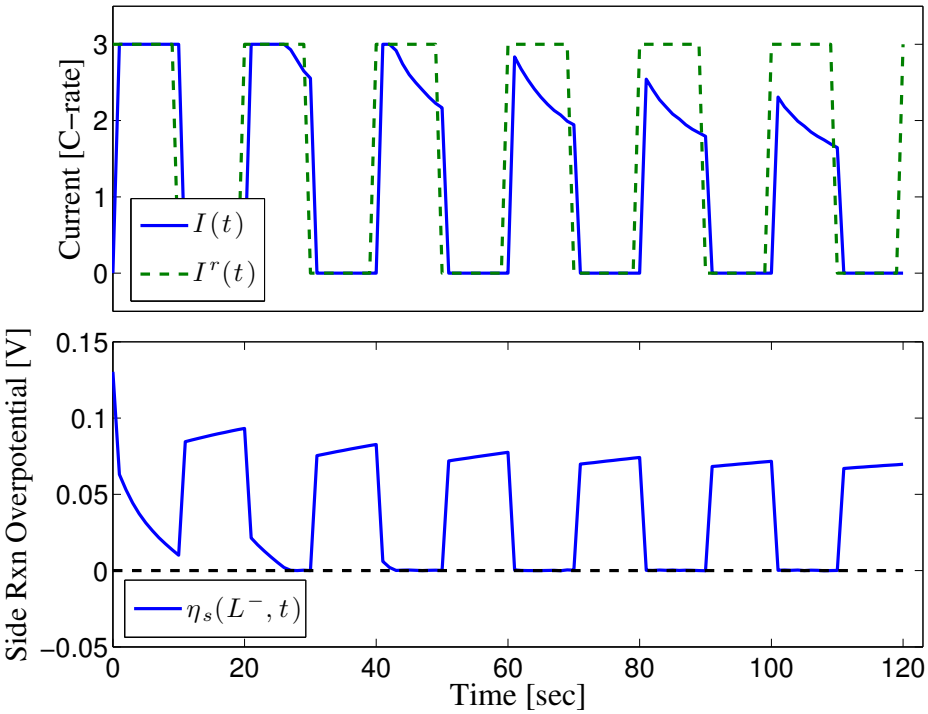
$$\beta^*[k] = \max\{\beta \in [0,1] : (x(t), z(t)) \in \mathcal{O}\}$$

Def'n: Admissible Set $\mathcal{O}$

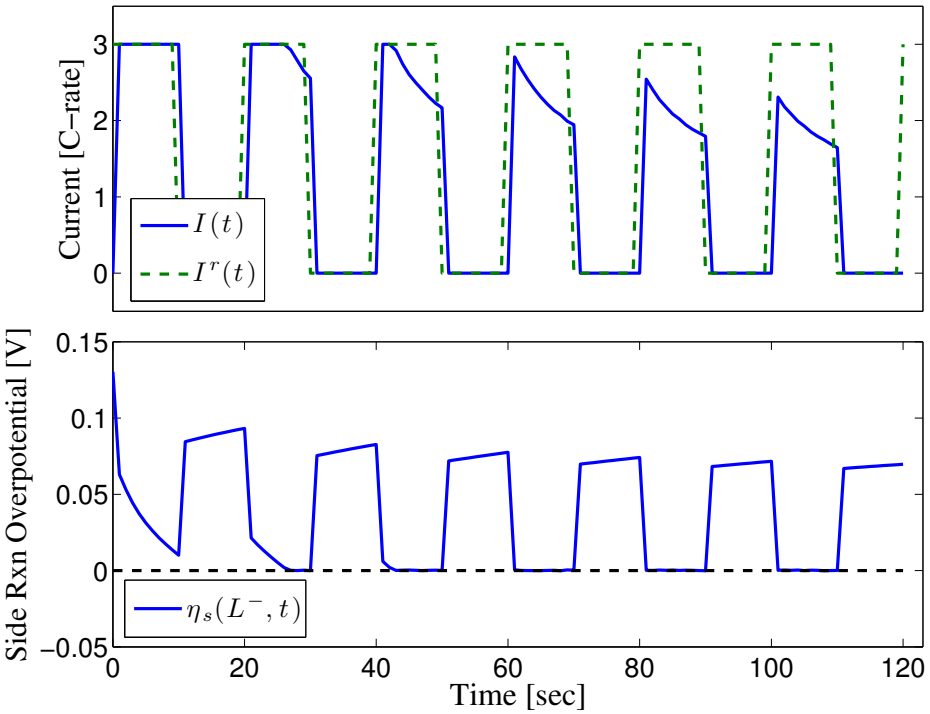
$$\mathcal{O} = \{(x(t), z(t)) : y(\tau) \in \mathcal{Y}, \forall \tau \in [t, t+T_s]\}$$

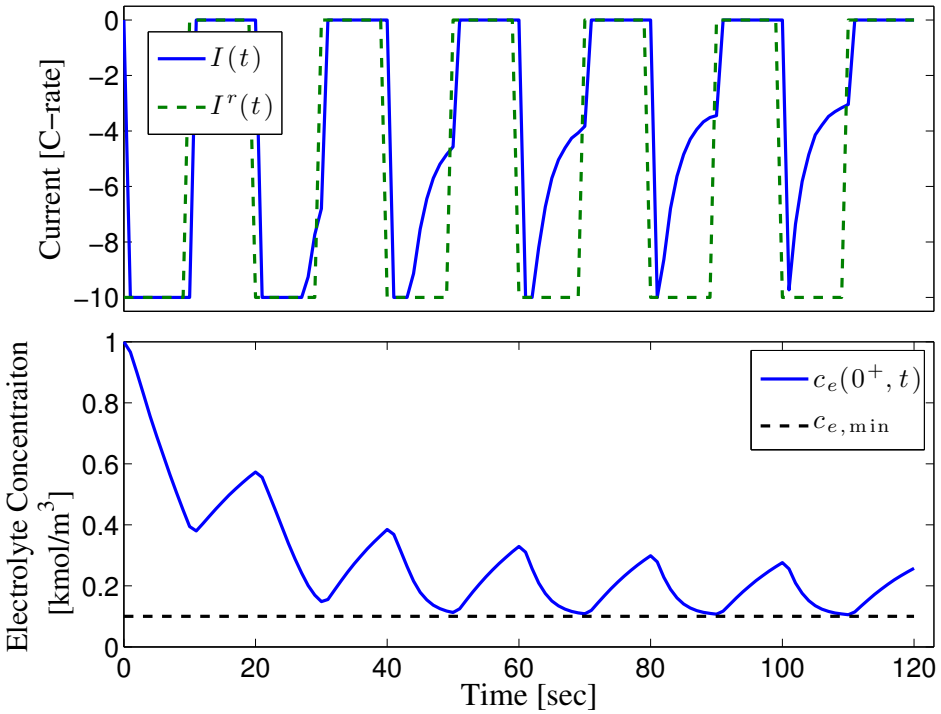
$$\begin{aligned} \dot{x}(t) &= f(x(t), z(t), \beta I^r) \\ 0 &= g(x(t), z(t), \beta I^r) \\ y(t) &= C_1 x(t) + C_2 z(t) + D \cdot \beta I^r + E \end{aligned}$$

Simulations: Operate at the Limits

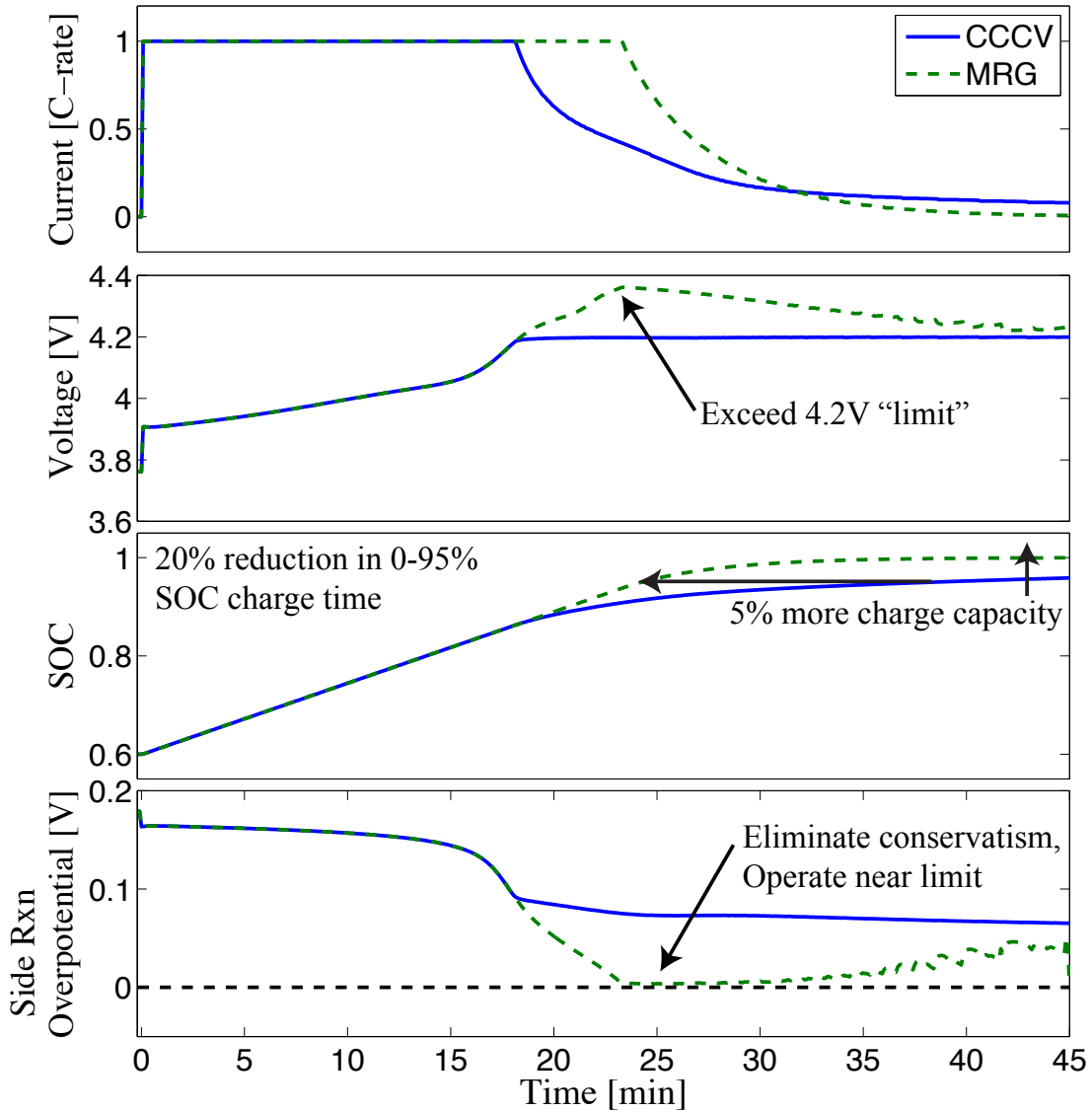


Simulations: Operate at the Limits





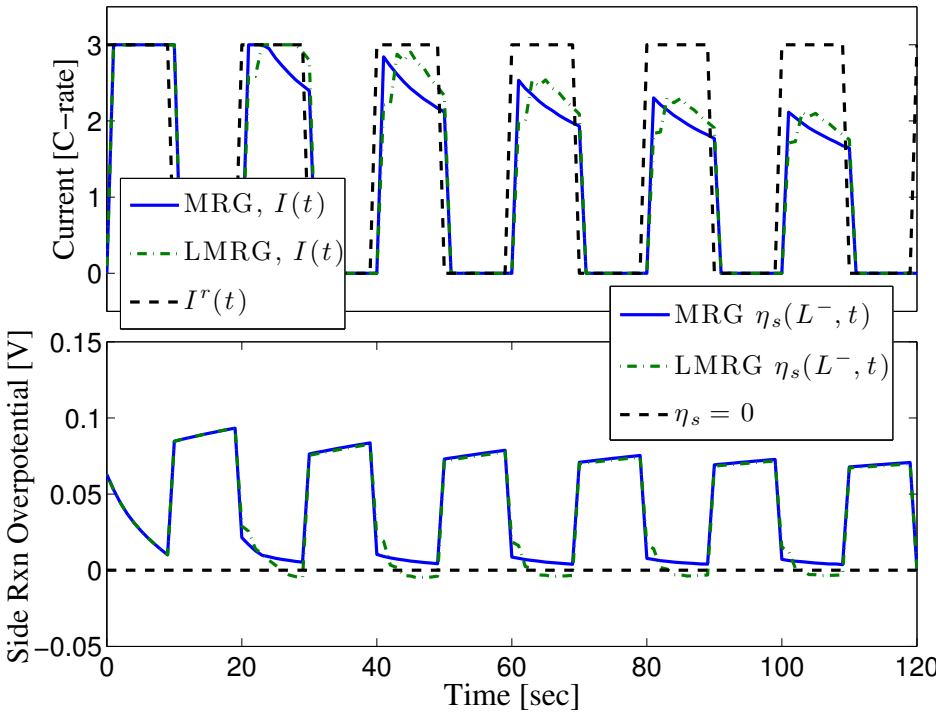
Application to Charging

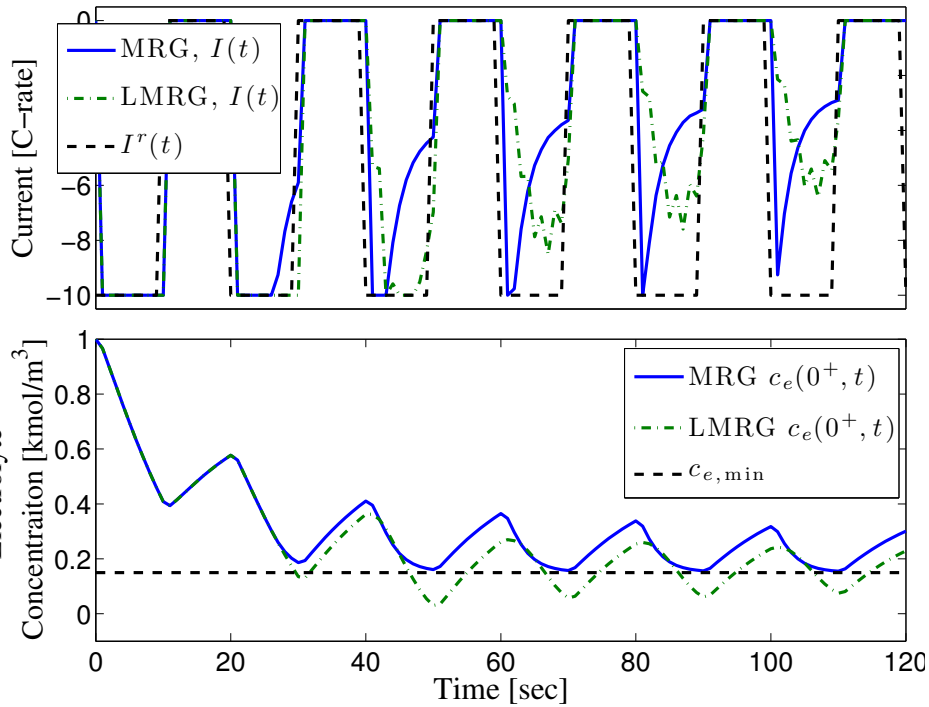


Linear Reference Governor

Modified Reference Governor (MRG) : Simulations

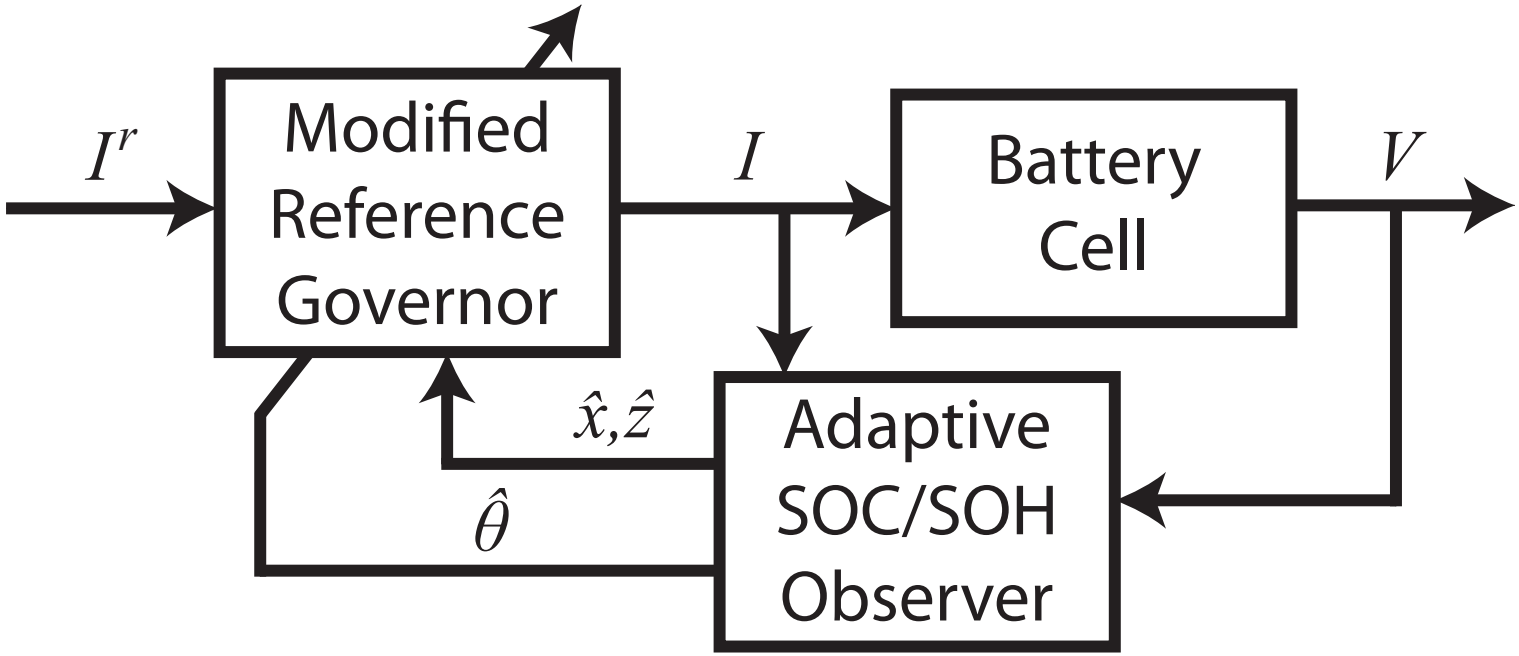
Linearized MRG (LMRG) : Explicit function evaluation





Reference Governor + Adaptive Observer

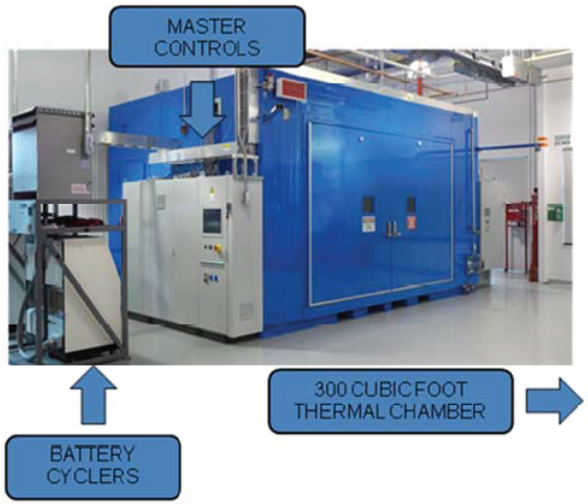
Simultaneous Estimation and Control!

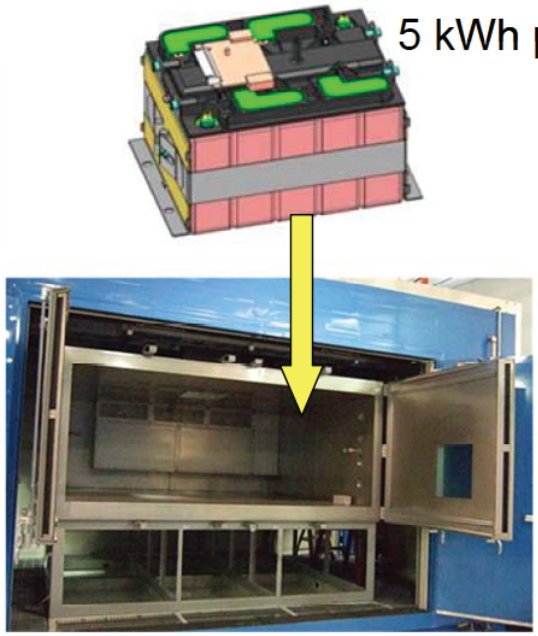


Upcoming Experimental Research

In Collaboration with Bosch, Cobasys, and ARPA-E





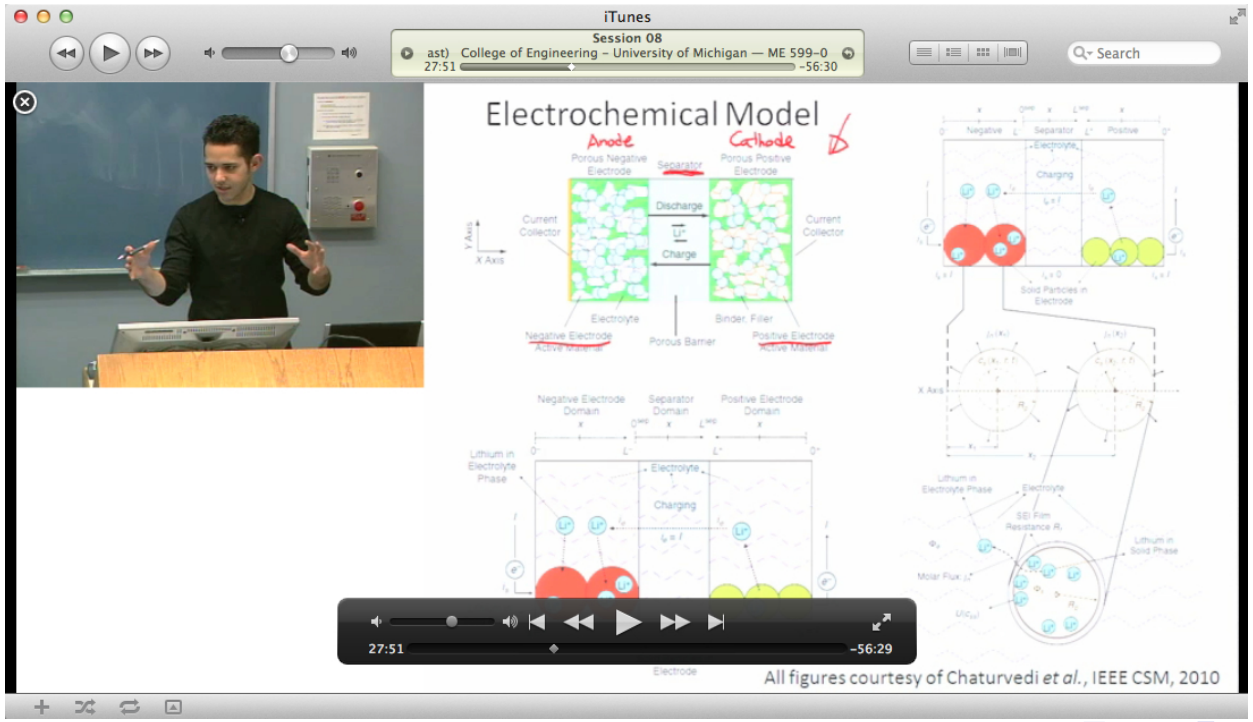


Battery Systems and Control Course

Funded by DOE-ARRA, University of Michigan

Enrollment

- Winter 2010: 59 + 5 distance
- Winter 2011: 50 + 26 distance
- ME, EE, ChemE, CS, Energy Systems, MatSci, Physics, Math
- Undergraduates
- Graduate students
- Professionals
  - Tesla Motors, General Motors, Roush, US Army



Outline

PHEV Power Management

Problem Statement

Design a supervisory control algorithm for plug-in hybrid electric vehicles (PHEVs) that splits engine and battery power in some optimal sense.



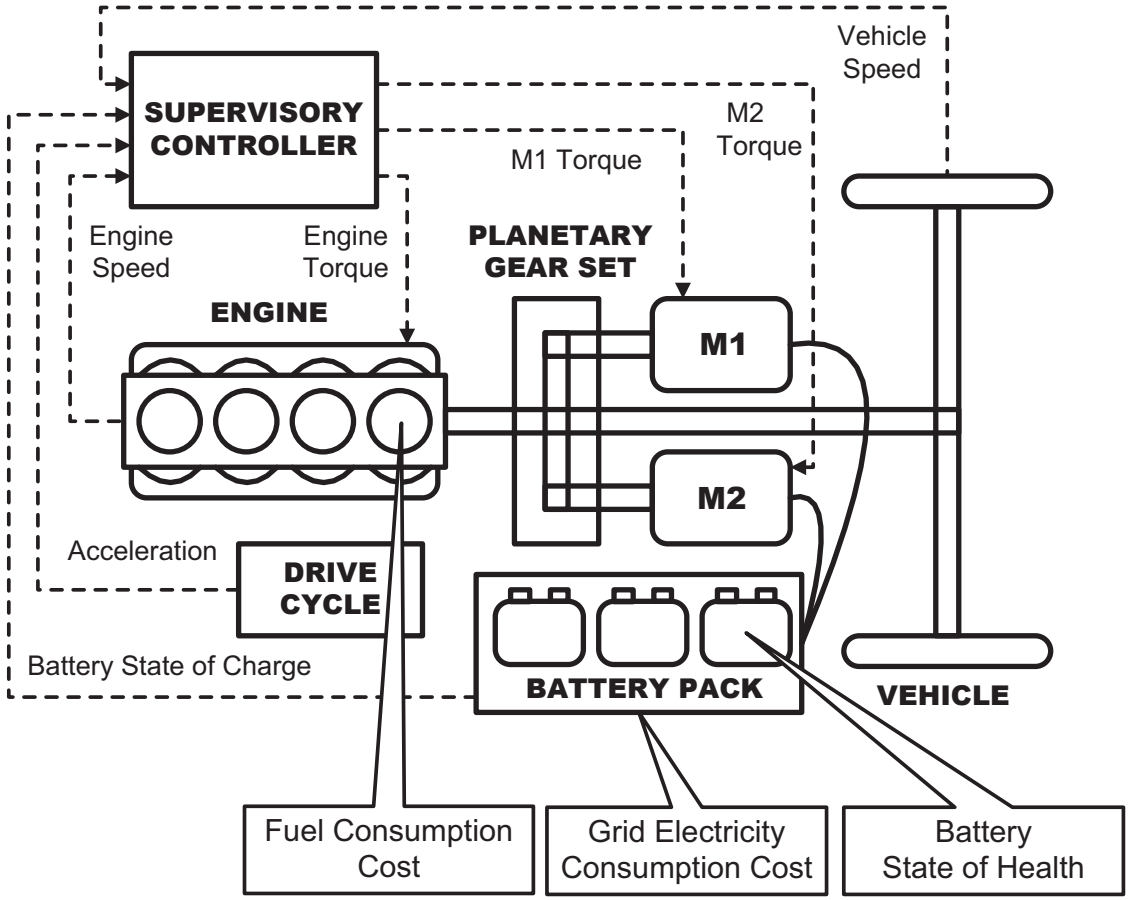
J. Voelcker, "Plugging Away in a Prius," *IEEE Spectrum*, vol. 45, pp. 30-48, 2008.



Power-Split PHEV Model

Ex: Toyota Prius, Ford Escape Hybrid

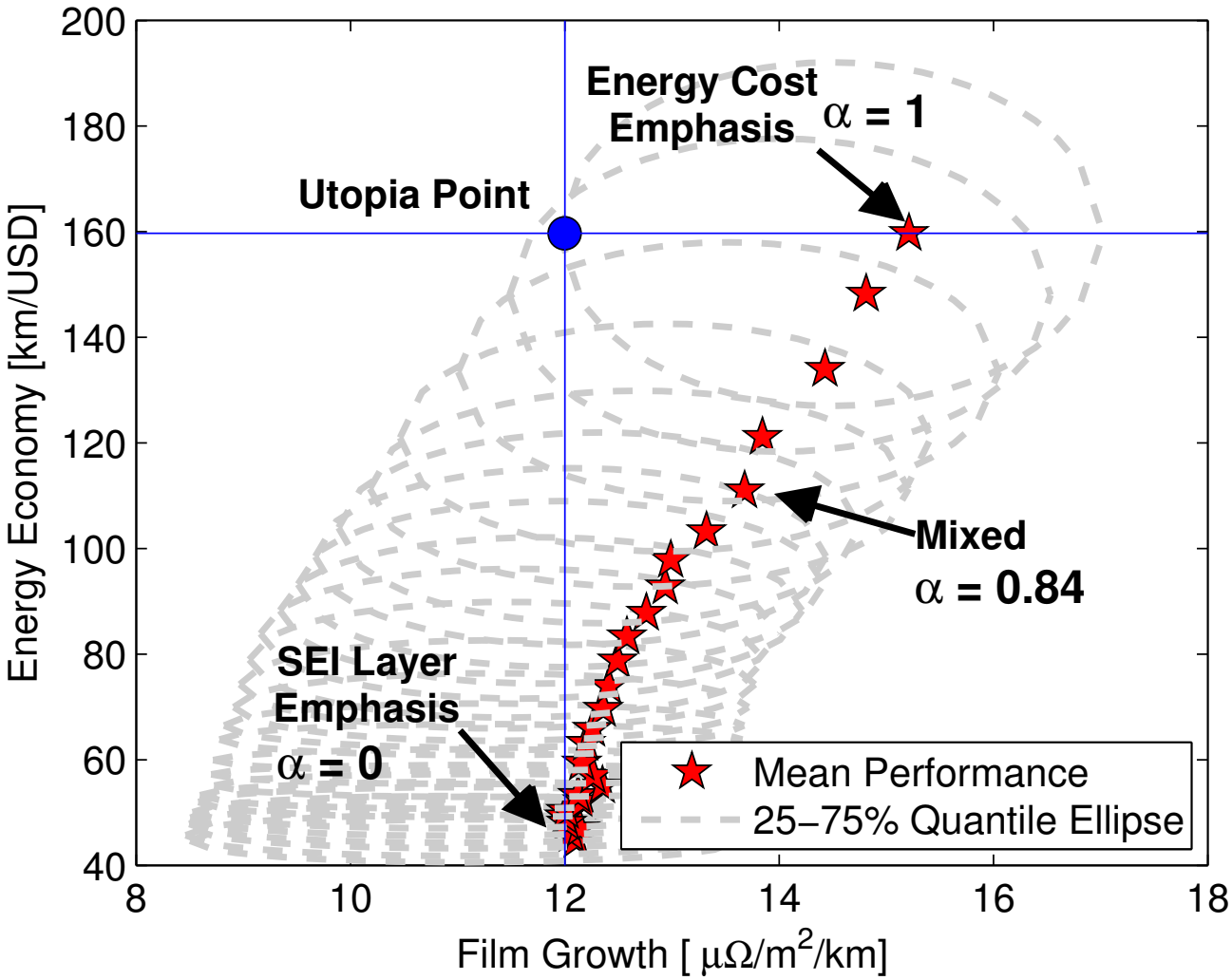
- Control Inputs
  - Engine Torque
  - M1 Torque
- State Variables
  - Engine speed
  - Vehicle speed
  - Battery SOC
  - Vehicle acceleration (Markov Chain)



Control Optimization: Minimize energy consumption cost AND battery aging

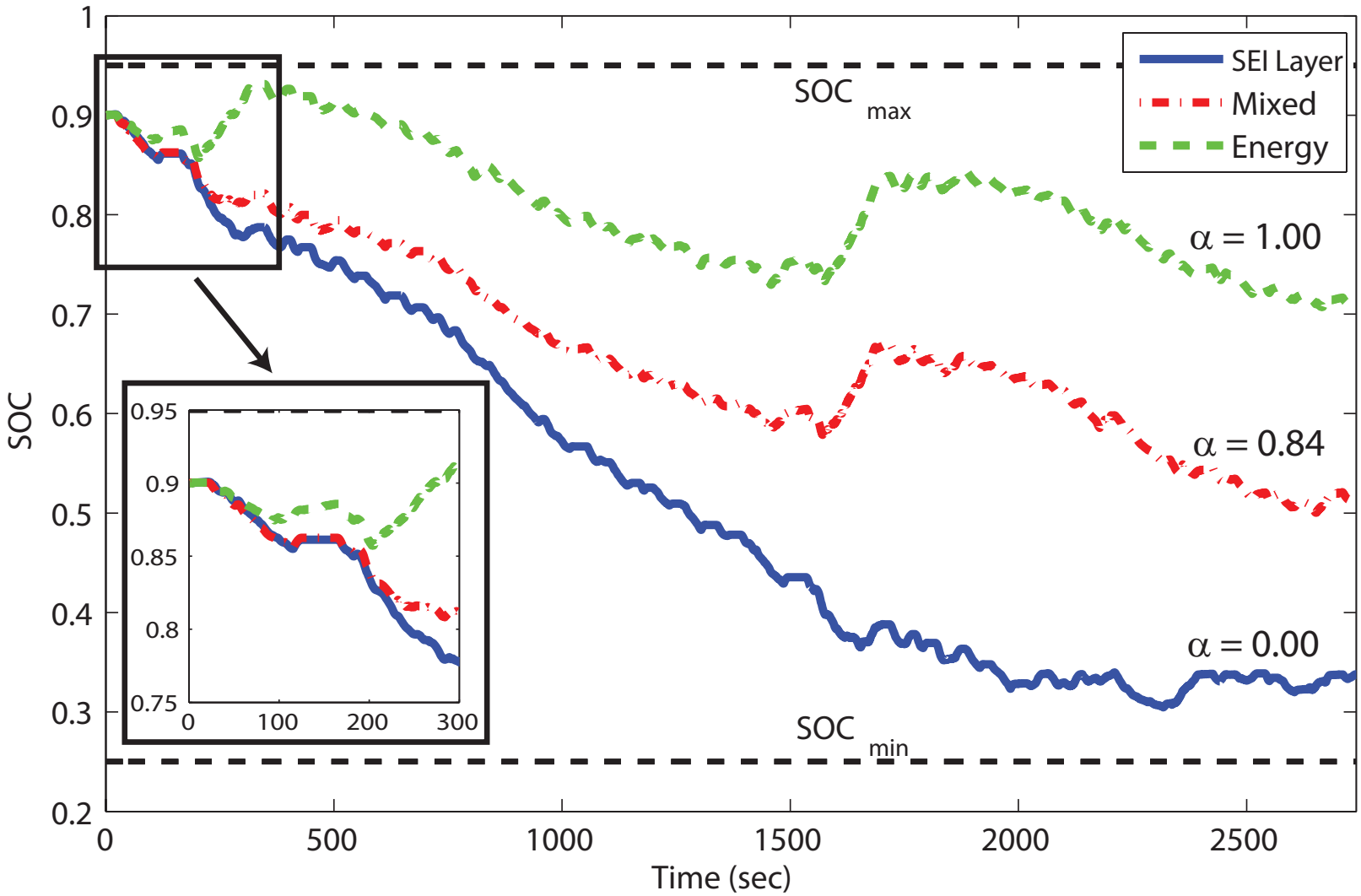
Pareto Set of Optimal Solutions

Anode-side SEI Layer Growth

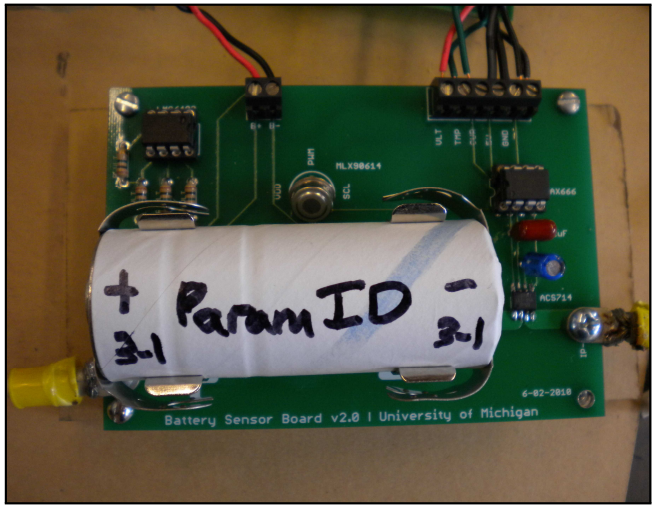


SOC Trajectories

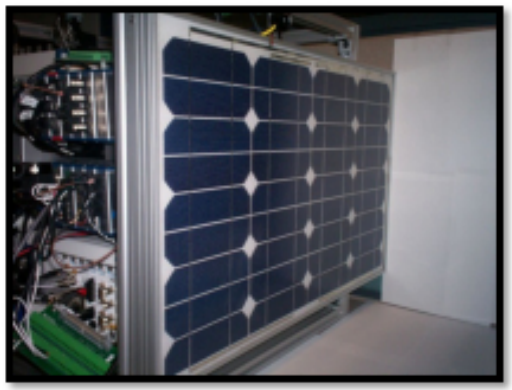
Anode-side SEI Layer Growth | UDDSx2



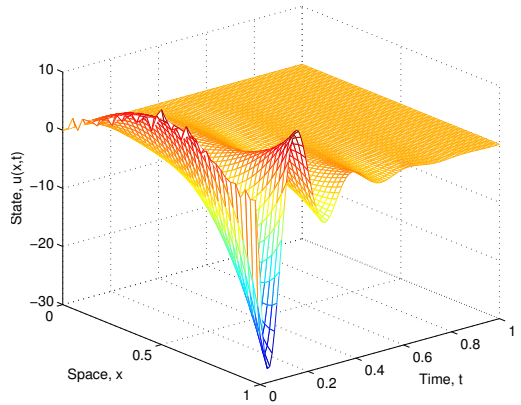
Energy & Controls Research: More than batteries



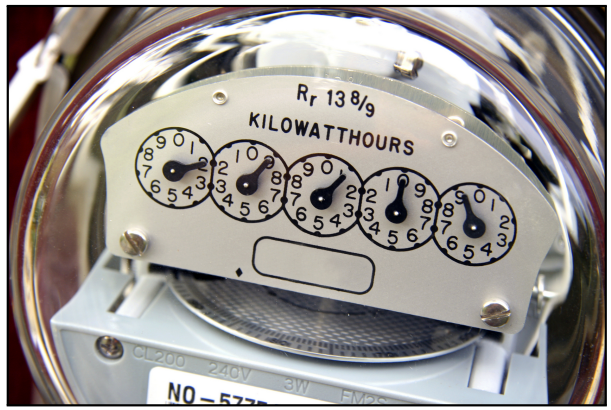
- SOC/SOH Estimation
- Constrained Control
- Model ID from Experimental Data
- Battery Pack Unbalancing
- PHEV Power Management



Control of Photovoltaic Systems



Optimal Control Theory for Distributed Parameter Systems



Demand Response in Smart Grids

Outline

Summary

Simultaneous SOC/SOH estimation
of physically meaningful variables via electrochemical models,
PDE estimation theory, and adaptive control.

Constrained control of batteries
via an electrochemical model
and reference governors.

Control Theory + Electrochemical Battery Models:
A critically important and fundamentally rich research area

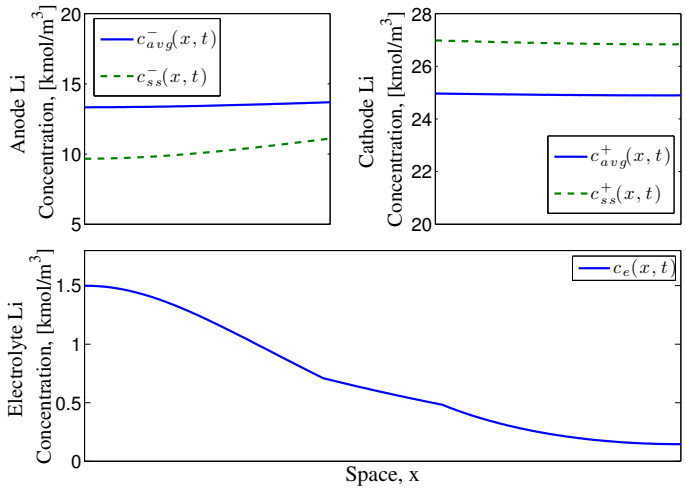
Thanks for your attention!
Questions?

Scott Moura, Ph.D.
http://flyingv.ucsd.edu/smoura/

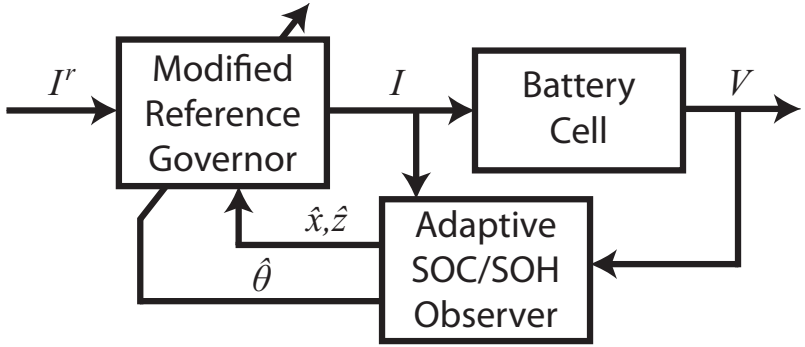
Advanced Battery Management Systems

ARPA-E

State Estimation w/ Electrolyte



Estimator + Reference Governor



Optimal charge/discharge

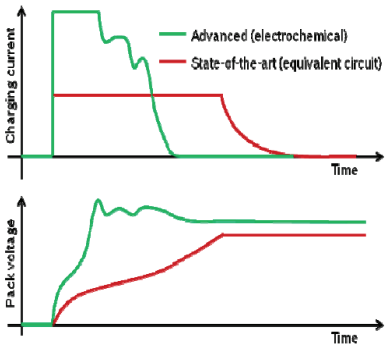


Figure 2: Charging phase of each duty cycle for BMS validation

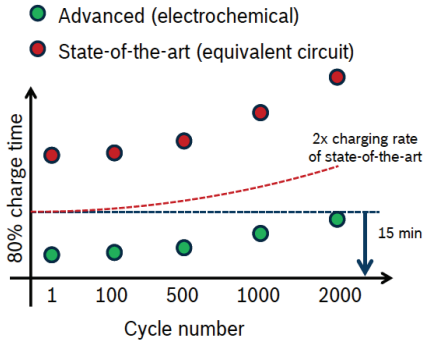
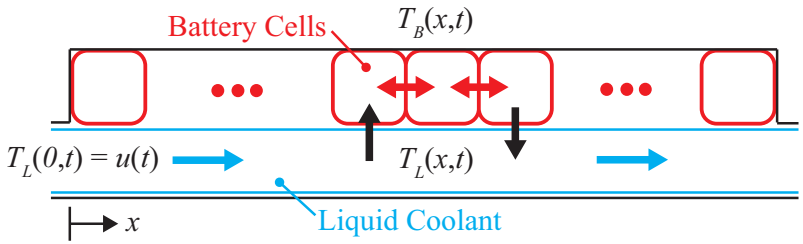


Figure 3: Comparison of charging time on a cycle to cycle basis for conventional BMS and advanced BMS

Thermal Management



Optimal Control of Distributed Parameter Systems

Models

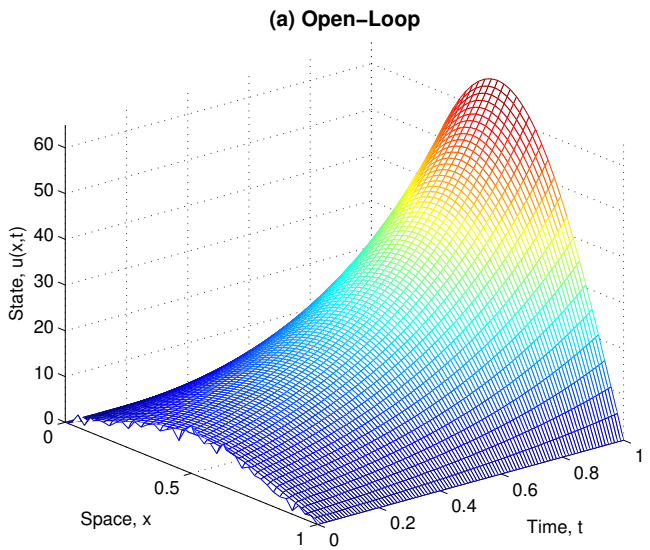
- Diffusion-Reaction-Advection
- Transport, Delays
- Waves, Beams, Nonlinear
- ...

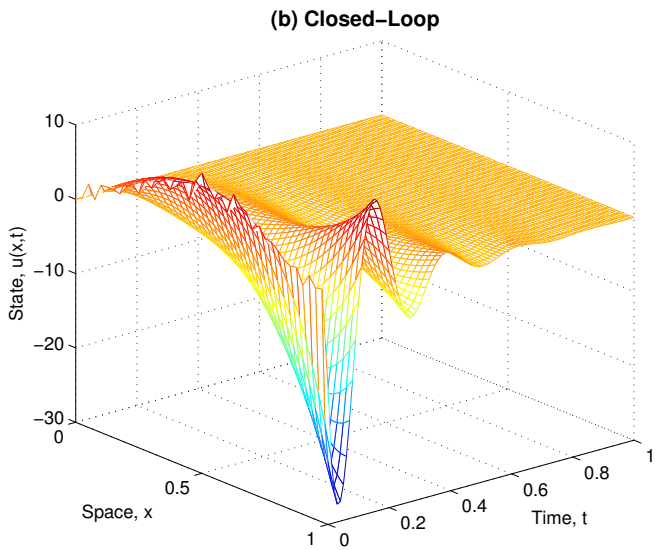
Apps

- Fluid Dynamics
- Contaminant transport
- Solar Forecasting
- Heat Transfer
- ...

Control Results

- LQR
- Reference tracking
- Estimation
- Acutator/Sensor placement
- ...





Demand Response of Aggregated Storage

Joint Work with Jan Bendsten, Aalborg University, Denmark

