Adaptive Estimation and Control of Models for Battery Electrochemistry

Scott Moura, Ph.D.

UC President's Postdoctoral Fellow
Cymer Center for Control Systems and Dynamics
UC San Diego

Mechanical Engineering Seminar
January 28, 2013



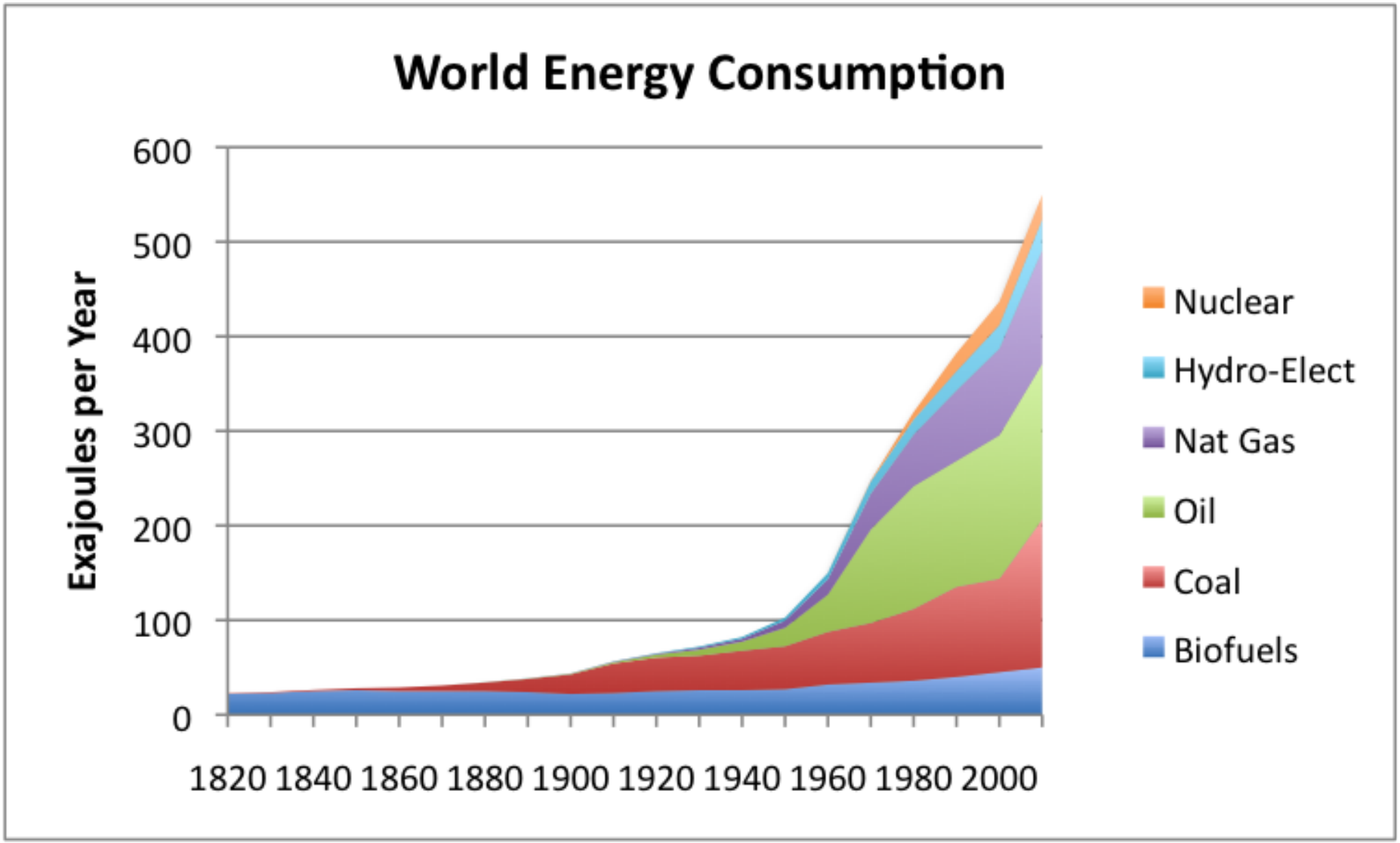
UNIVERSITY OF CALIFORNIA
SANTA BARBARA

Core Philosophy:

(Dynamical models of physical phenomena)

$+$ (novel control paradigms)

$=$ (transformative advancements)



Vaclav Smil Estimates from Energy Transitions

Energy Initiatives



Denmark 50% wind penetration by 2025

China leads manufacturing of renewable tech

Brazil uses 86% renewables

THE WHITE HOUSE
WASHINGTON

EV Everywhere

SunShot

Green Button



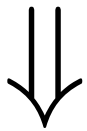
33% renewables by 2020

Go Solar California

20% reduction of bldg. energy by 2015

Energy Crisis Solutions

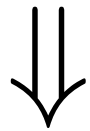
Integrate variable renewables



Energy storage

(e.g., batteries)

Decrease energy waste



Intelligent energy management

(e.g., smart grids)

Energy Crisis Solutions

Integrate variable renewables



Energy storage

(e.g., batteries)

Decrease energy waste



Intelligent energy management

(e.g., smart grids)

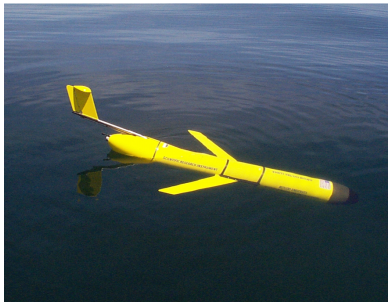
Outline

1. Batteries
   - [Electrochemical Modeling] Incorporating Physics
   - [SOC/SOH Estimation] Looking Inside w/ Models, Meas., and Math
   - [Constrained Control] Operate at the Limits, Safely
2. Demand Response in Smart Grids
3. Future

A Golden Era


IS-1
ST. JUDE MEDICAL
Sylmar, CA USA
ACCENT SR RF
PM1210 SSR
IS-1
ST. JUDE MEDICAL
Sylmar, CA USA
ANTHEM RF
PM3212 DDDRV





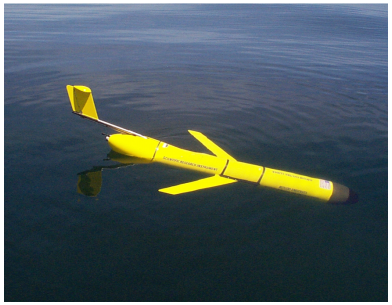




A Golden Era



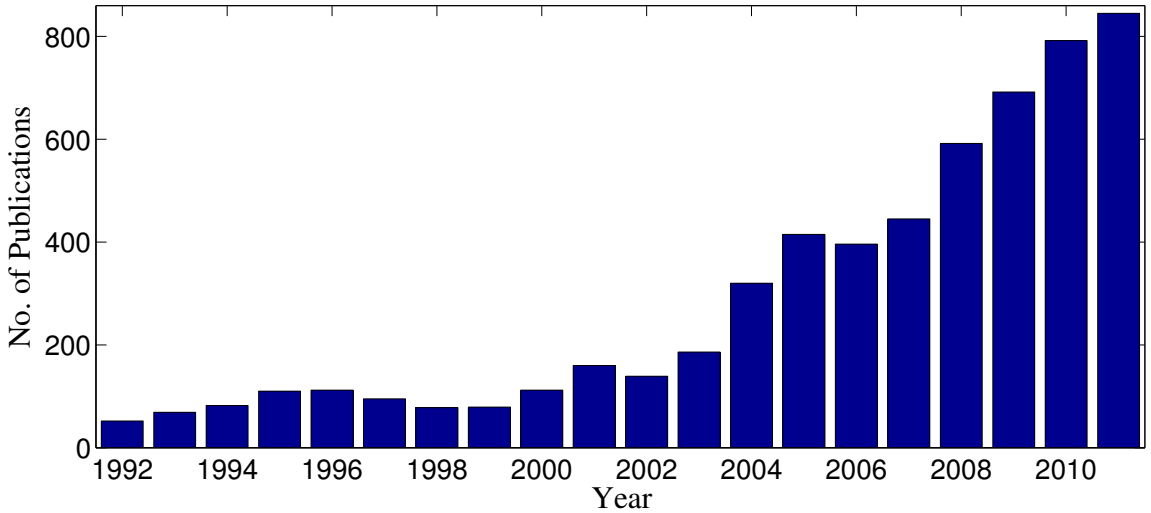








Keyword: “Battery Systems and Control”



The Battery Problem

Needs: Cheap, high energy, high power, long life

Today's reality: Expensive, conservatively design/operated, die too quickly

Some Motivating Facts

EV Batts	$800 / kWh now (2010) $125 / kWh for parity to IC engine Only 75% of available capacity is used Range anxiety inhibits adoption Lifetime risks caused by fast charging

Two Solutions

Design better batteries (materials science & chemistry)	Make current batteries better (estimation and control)

The Battery Problem

Needs: Cheap, high energy, high power, long life

Today's reality: Expensive, conservatively design/operated, die too quickly

Some Motivating Facts

EV Batts	$800 / kWh now (2010) $125 / kWh for parity to IC engine Only 75% of available capacity is used Range anxiety inhibits adoption Lifetime risks caused by fast charging

Two Solutions

Design better batteries (materials science & chemistry)	Make current batteries better (estimation and control)

The Battery Problem

Needs: Cheap, high energy, high power, long life

Today's reality: Expensive, conservatively design/operated, die too quickly

Some Motivating Facts

EV Batts	\$800 / kWh now (2010) \$125 / kWh for parity to IC engine Only 75% of available capacity is used Range anxiety inhibits adoption Lifetime risks caused by fast charging

Two Solutions

Design better batteries (materials science & chemistry)	Make current batteries better (estimation and control)

The Battery Problem

Needs: Cheap, high energy, high power, long life

Today's reality: Expensive, conservatively design/operated, die too quickly

Some Motivating Facts

EV Batts	\$800 / kWh now (2010) \$125 / kWh for parity to IC engine Only 75% of available capacity is used Range anxiety inhibits adoption Lifetime risks caused by fast charging

Two Solutions

Design better batteries (materials science & chemistry)	Make current batteries better (estimation and control)

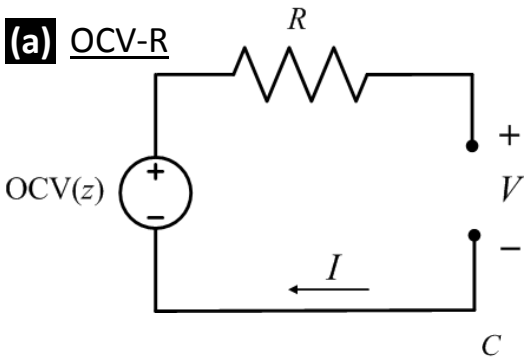
Outline

1. Batteries
   - [Electrochemical Modeling] Incorporating Physics
   - [SOC/SOH Estimation] Looking Inside w/ Models, Meas., and Math
   - [Constrained Control] Operate at the Limits, Safely
2. Demand Response in Smart Grids
3. Future

Battery Models

Equivalent Circuit Model

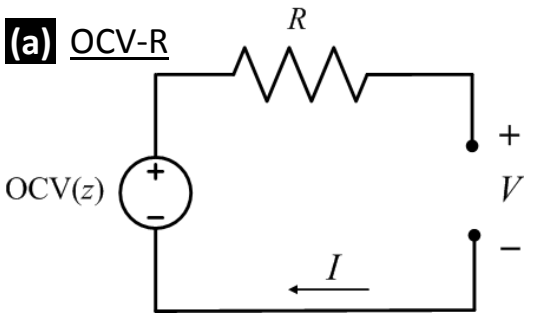
(a) OCV-R



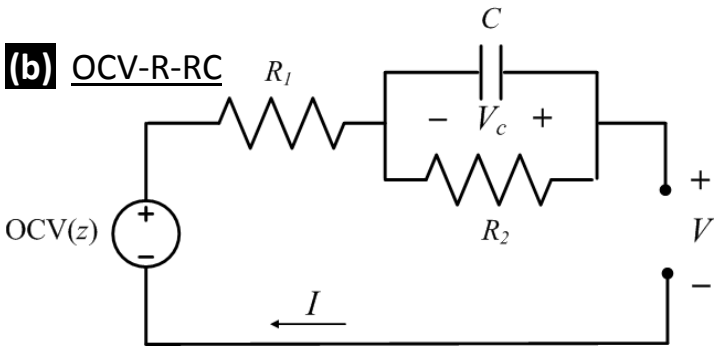
Battery Models

Equivalent Circuit Model

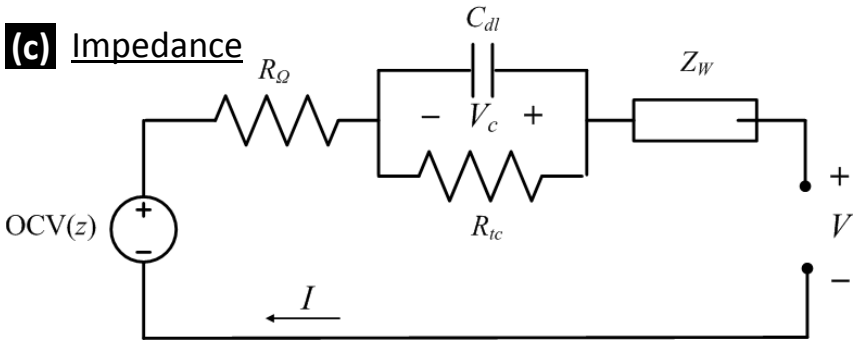
(a) OCV-R



(b) OCV-R-RC

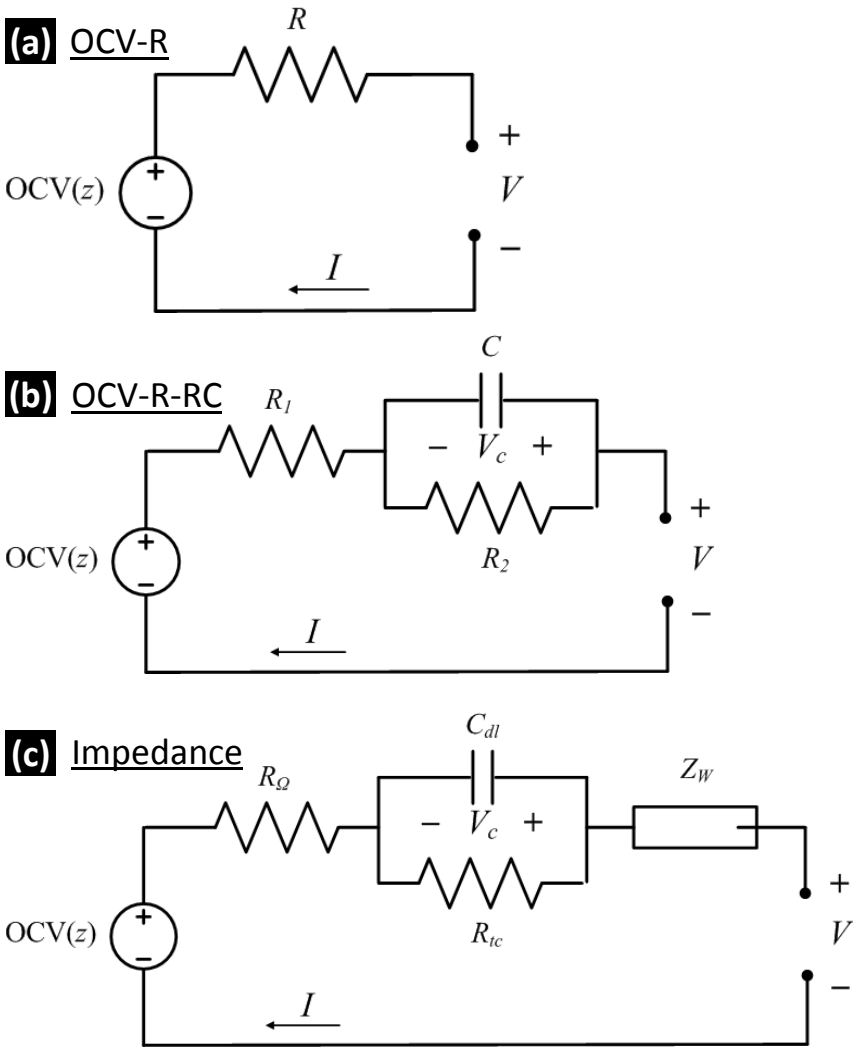


(c) Impedance

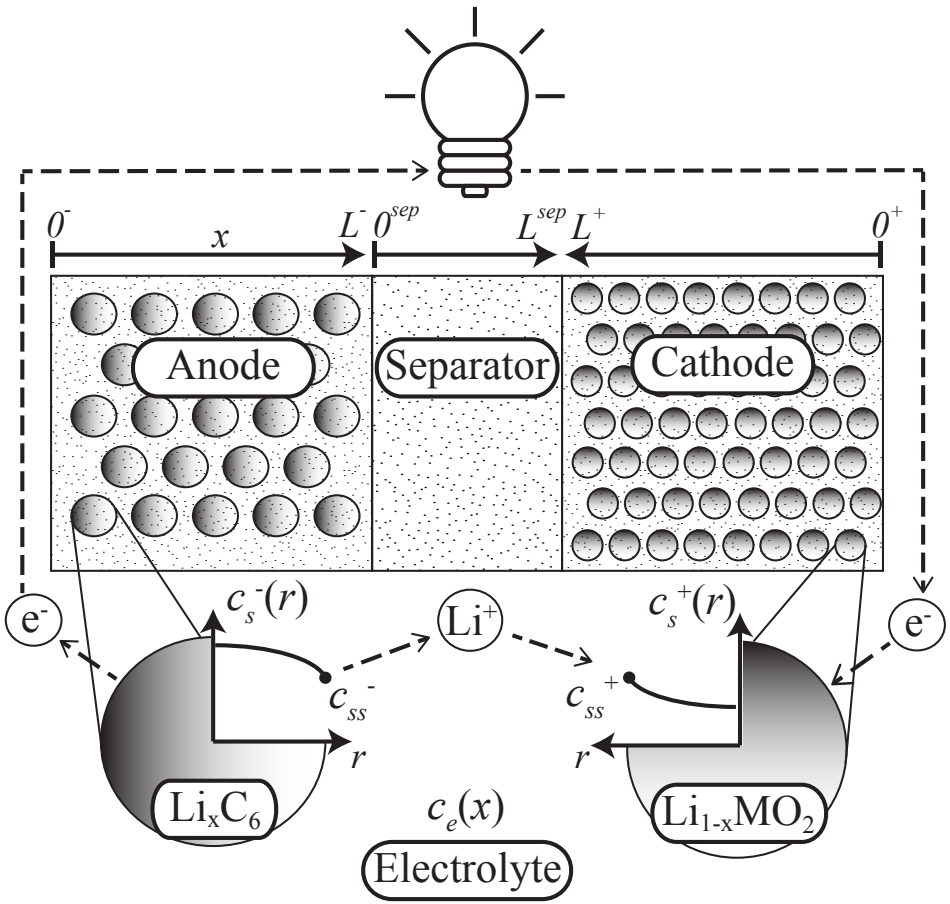


Battery Models

Equivalent Circuit Model

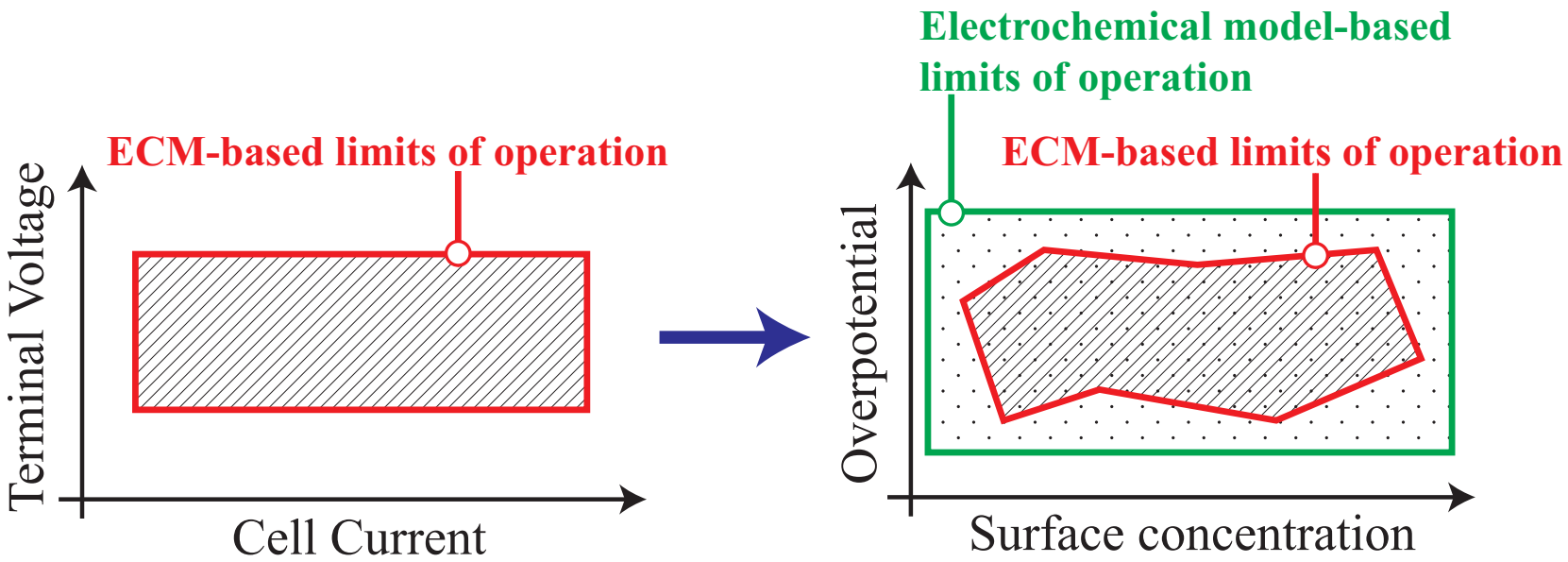


Electrochemical Model





Operate Batteries at their Physical Limits



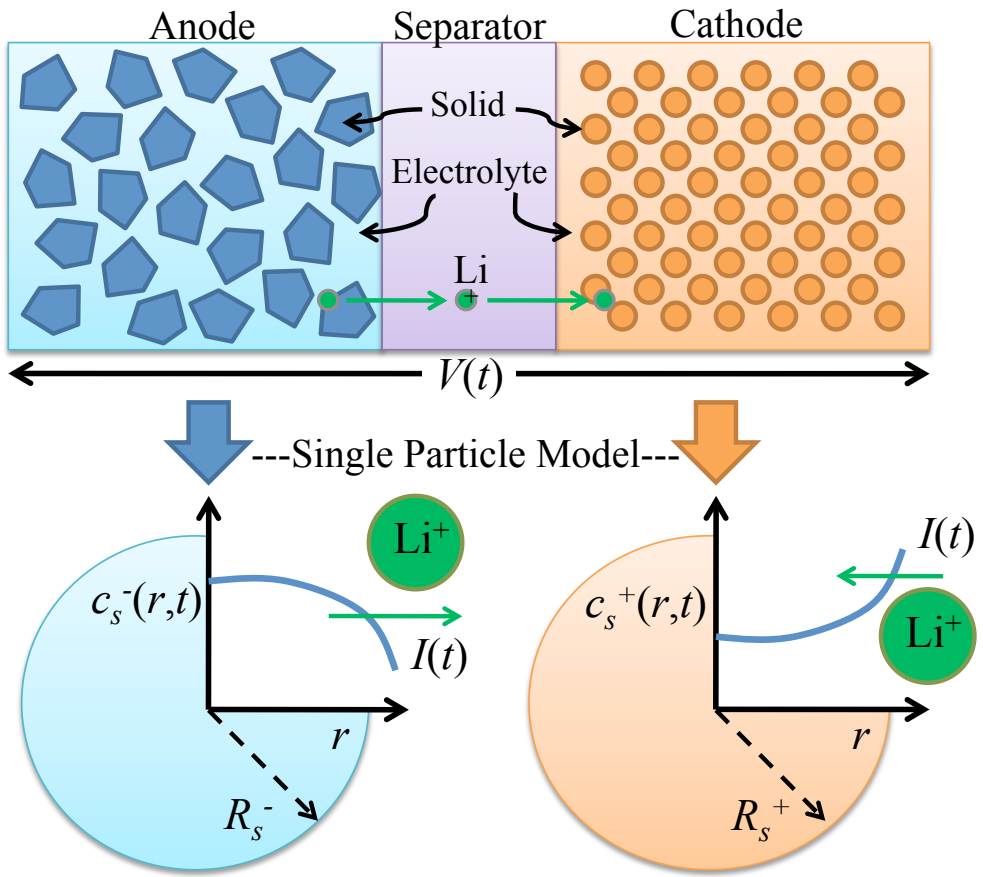
Electrochemical Model Equations

well, some of them

Description	Equation
Solid phase Li concentration	$\frac{\partial c_s^{\pm}}{\partial t}(x,r,t) = \frac{1}{r^2}\frac{\partial}{\partial r}\left[D_s^{\pm} r^2 \frac{\partial c_s^{\pm}}{\partial r}(x,r,t)\right]$
Electrolyte Li concentration	$\varepsilon_e \frac{\partial c_e}{\partial t}(x,t) = \frac{\partial}{\partial x}\left[\varepsilon_e D_e \frac{\partial c_e}{\partial x}(x,t) + \frac{1-t_c^0}{F} i_e^{\pm}(x,t)\right]$
Solid potential	$\frac{\partial \phi_s^{\pm}}{\partial x}(x,t) = \frac{i_e^{\pm}(x,t) - I(t)}{\sigma^{\pm}}$
Electrolyte potential	$\frac{\partial \phi_e}{\partial x}(x,t) = -\frac{i_e^{\pm}(x,t)}{\kappa} + \frac{2RT}{F}(1-t_c^0)\left(1 + \frac{d\ln f_{c/a}}{d\ln c_e}(x,t)\right)\frac{\partial \ln c_e}{\partial x}(x,t)$
Electrolyte ionic current	$\frac{\partial i_e^{\pm}}{\partial x}(x,t) = a_s F j_n^{\pm}(x,t)$
Molar flux btw phases	$j_n^{\pm}(x,t) = \frac{1}{F} i_0^{\pm}(x,t)\left[e^{\frac{\alpha_a F}{RT}\eta^{\pm}(x,t)} - e^{-\frac{\alpha_c F}{RT}\eta^{\pm}(x,t)}\right]$
Temperature	$\rho c_P \frac{dT}{dt}(t) = h\left[T^0(t) - T(t)\right] + I(t)V(t) - \int_{0^-}^{0^+} a_s F j_n(x,t)\Delta T(x,t)dx$

Animation of Li Ion Evolution

Single Particle Model (SPM)

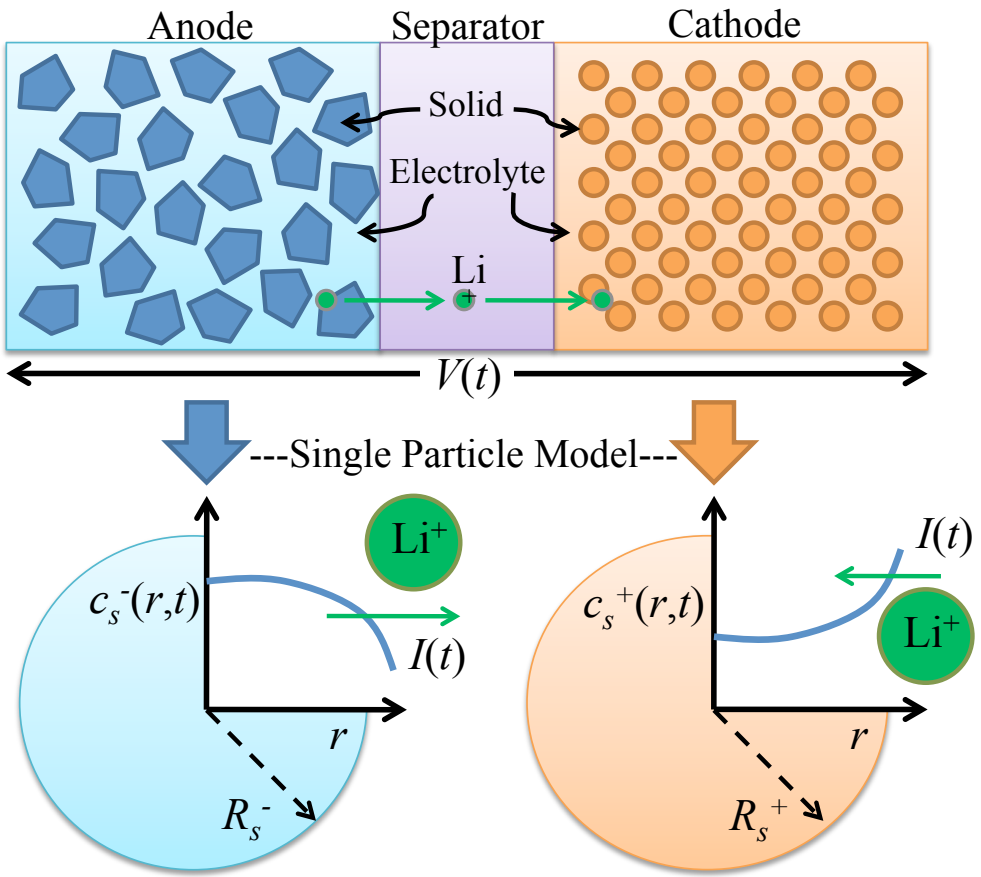


Single Particle Model (SPM)

Diffusion of Li in solid phase:

$$\frac{\partial c_s^-}{\partial t}(r,t) = \frac{D_s^-}{r^2}\frac{\partial}{\partial r}\left[r^2\frac{\partial^2 c_s^-}{\partial r^2}(r,t)\right]$$

$$\frac{\partial c_s^+}{\partial t}(r,t) = \frac{D_s^+}{r^2}\frac{\partial}{\partial r}\left[r^2\frac{\partial^2 c_s^+}{\partial r^2}(r,t)\right]$$



Single Particle Model (SPM)

Diffusion of Li in solid phase:

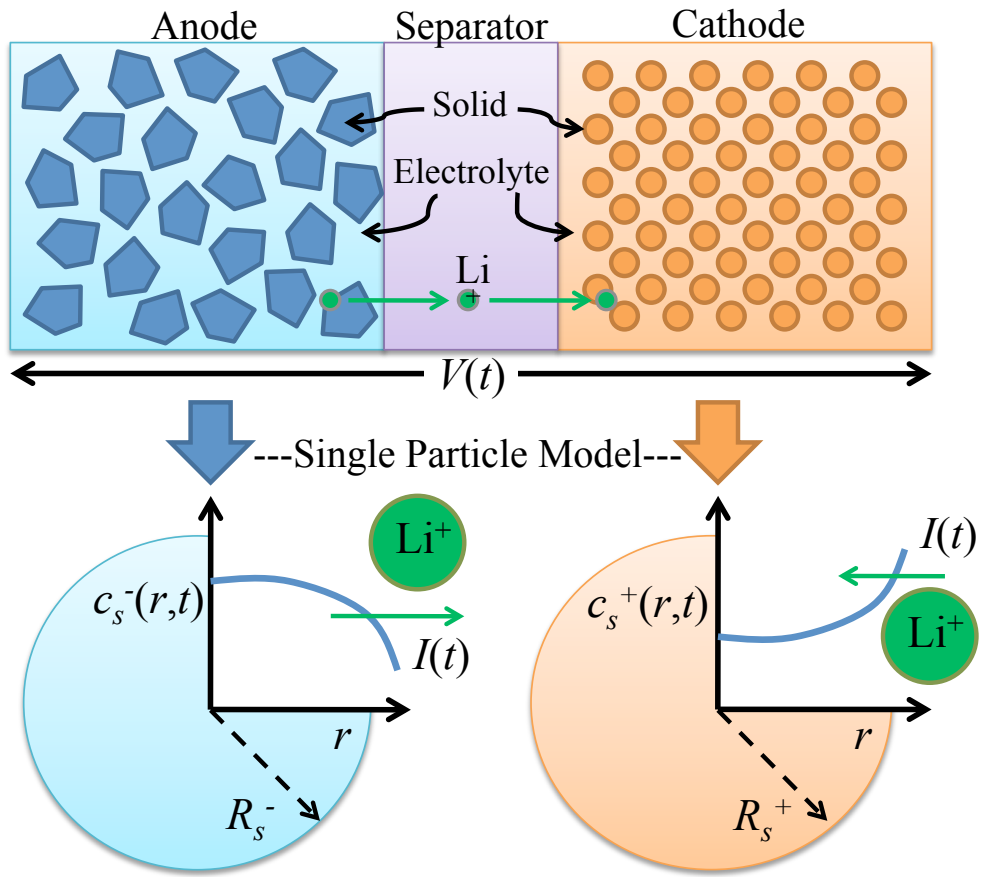
$$\frac{\partial c_s^-}{\partial t}(r,t) = \frac{D_s^-}{r^2}\frac{\partial}{\partial r}\left[r^2\frac{\partial^2 c_s^-}{\partial r^2}(r,t)\right]$$

$$\frac{\partial c_s^+}{\partial t}(r,t) = \frac{D_s^+}{r^2}\frac{\partial}{\partial r}\left[r^2\frac{\partial^2 c_s^+}{\partial r^2}(r,t)\right]$$

Boundary conditions:

$$\frac{\partial c_s^-}{\partial r}(R_s^-,t) = -\rho^+ I(t)$$

$$\frac{\partial c_s^+}{\partial r}(R_s^+,t) = \rho^- I(t)$$



Single Particle Model (SPM)

Diffusion of Li in solid phase:

$$\frac{\partial c_s^-}{\partial t}(r,t) = \frac{D_s^-}{r^2}\frac{\partial}{\partial r}\left[r^2\frac{\partial^2 c_s^-}{\partial r^2}(r,t)\right]$$

$$\frac{\partial c_s^+}{\partial t}(r,t) = \frac{D_s^+}{r^2}\frac{\partial}{\partial r}\left[r^2\frac{\partial^2 c_s^+}{\partial r^2}(r,t)\right]$$

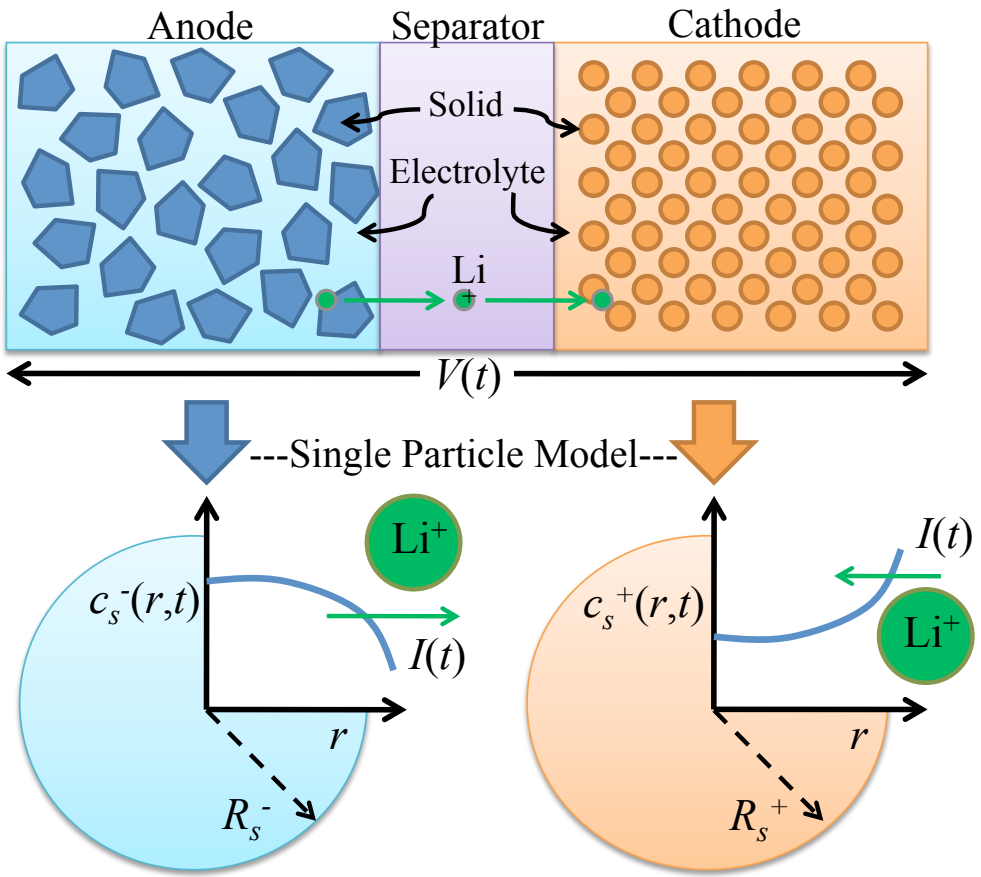
Boundary conditions:

$$\frac{\partial c_s^-}{\partial r}(R_s^-,t) = -\rho^+ I(t)$$

$$\frac{\partial c_s^+}{\partial r}(R_s^+,t) = \rho^- I(t)$$

Voltage Output Function:

$$V(t) = h(c_{ss}^-(t), c_{ss}^+(t), I(t); \theta)$$



Single Particle Model (SPM)

Diffusion of Li in solid phase:

$$\frac{\partial c_s^-}{\partial t}(r,t) = \frac{D_s^-}{r^2}\frac{\partial}{\partial r}\left[r^2\frac{\partial^2 c_s^-}{\partial r^2}(r,t)\right]$$

$$\frac{\partial c_s^+}{\partial t}(r,t) = \frac{D_s^+}{r^2}\frac{\partial}{\partial r}\left[r^2\frac{\partial^2 c_s^+}{\partial r^2}(r,t)\right]$$

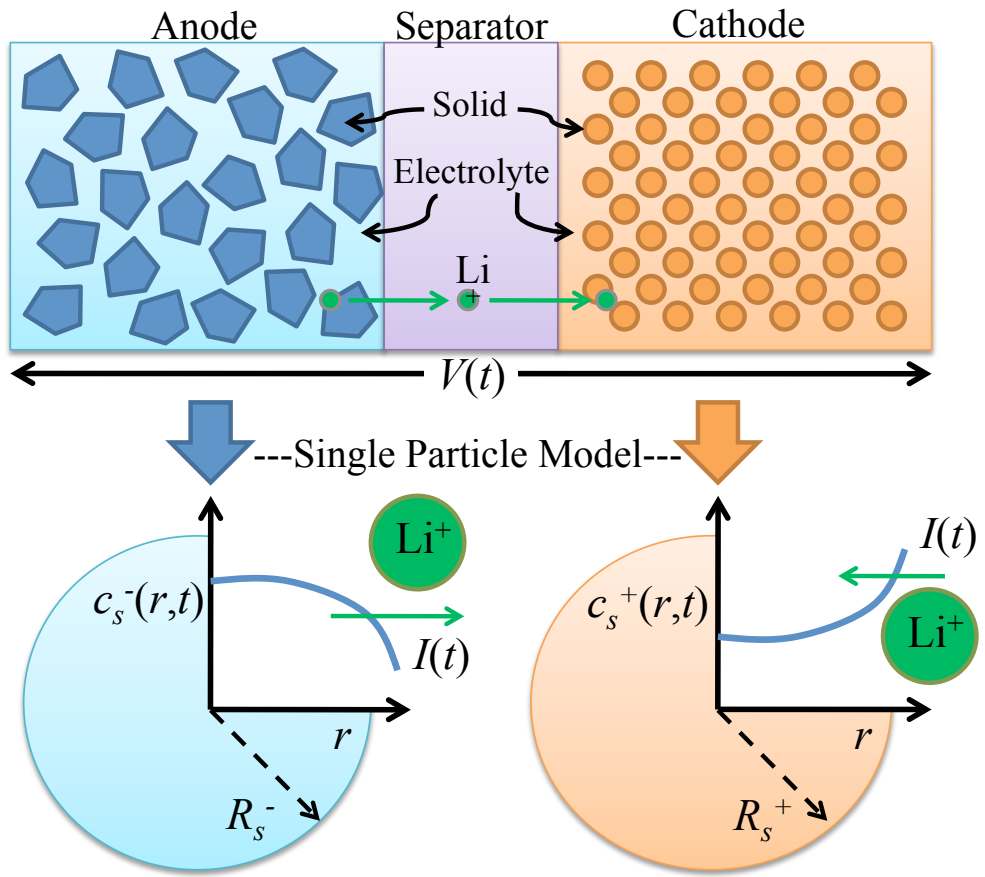
Boundary conditions:

$$\frac{\partial c_s^-}{\partial r}(R_s^-,t) = -\rho^+ I(t)$$

$$\frac{\partial c_s^+}{\partial r}(R_s^+,t) = \rho^- I(t)$$

Voltage Output Function:

$$V(t) = h(c_{ss}^-(t), c_{ss}^+(t), I(t); \theta)$$

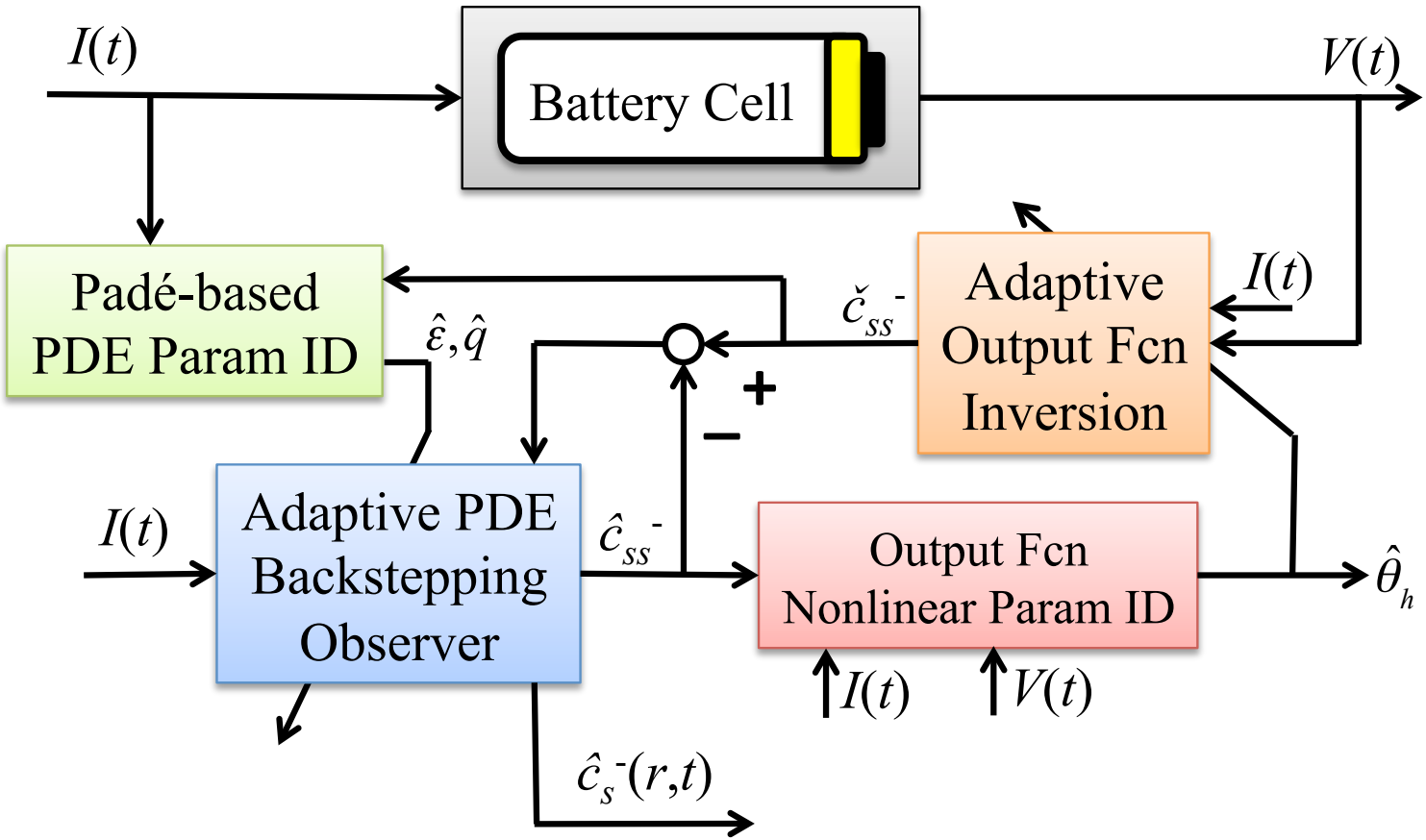


Definitions

- SOC: Bulk concentration SOC_{bulk}, Surface concentration $c_{ss}^-(t)$
- SOH: Physical parameters, e.g. ε, q, n_{Li}, R_f

Adaptive Observer

Combined State & Parameter Estimation



Outline

1. Batteries
   - [Electrochemical Modeling] Incorporating Physics
   - [SOC/SOH Estimation] Looking Inside w/ Models, Meas., and Math
   - [Constrained Control] Operate at the Limits, Safely
2. Demand Response in Smart Grids
3. Future

The SOC Estimation Problem

Problem Statement

Estimate states $c_s^-(r,t), c_s^+(r,t)$ from measurements $I(t), V(t)$ and SPM

The SOC Estimation Problem

Problem Statement

Estimate states $c_s^-(r,t), c_s^+(r,t)$ from measurements $I(t), V(t)$ and SPM

Simplify the Math

- Model reduction to achieve observability
- Normalize time and space
- Scale spatial dimension

The SOC Estimation Problem

Problem Statement

Estimate states $c_s^-(r,t), c_s^+(r,t)$ from measurements $I(t), V(t)$ and SPM

Simplify the Math

- Model reduction to achieve observability
- Normalize time and space
- Scale spatial dimension

Model Eqns. for Observer Design

$$\frac{\partial c}{\partial t}(r,t) = \varepsilon \frac{\partial^2 c}{\partial r^2}(r,t) \qquad \text{Heat PDE}$$

$$c(0,t) = 0$$

$$\frac{\partial c}{\partial r}(1,t) - c(1,t) = -q\rho I(t)$$

$$\text{Measurement} = c(1,t) = \check{c}_{ss}^-(t)$$

Backstepping PDE Estimator

Estimator

$$
\begin{aligned}
\frac{\partial \hat{c}}{\partial t}(r,t) &= \varepsilon \frac{\partial^2 \hat{c}}{\partial r^2}(r,t) + p_1(r)\left[c(1,t) - \hat{c}(1,t)\right] \\
\hat{c}(0,t) &= 0 \\
\frac{\partial \hat{c}}{\partial r}(1,t) - \hat{c}(1,t) &= -q\rho I(t) + p_{10}\left[c(1,t) - \hat{c}(1,t)\right] \\
\tilde{c}(1,t) &= c(1,t) - \hat{c}(1,t)
\end{aligned}
$$

Backstepping PDE Estimator

Estimator

$$\begin{aligned}
\frac{\partial \hat{c}}{\partial t}(r,t) &= \varepsilon \frac{\partial^2 \hat{c}}{\partial r^2}(r,t) + p_1(r)\left[c(1,t) - \hat{c}(1,t)\right] \\
\hat{c}(0,t) &= 0 \\
\frac{\partial \hat{c}}{\partial r}(1,t) - \hat{c}(1,t) &= -q\rho I(t) + p_{10}\left[c(1,t) - \hat{c}(1,t)\right] \\
\tilde{c}(1,t) &= c(1,t) - \hat{c}(1,t)
\end{aligned}$$

Estimation Error Dynamics: $\tilde{c}(r,t) = c(r,t) - \hat{c}(r,t)$

$$\begin{aligned}
\frac{\partial \tilde{c}}{\partial t}(r,t) &= \varepsilon \frac{\partial^2 \tilde{c}}{\partial r^2}(r,t) - p_1(r)\tilde{c}(1,t) \\
\tilde{c}(0,t) &= 0 \\
\frac{\partial \tilde{c}}{\partial r}(1,t) - \tilde{c}(1,t) &= -p_{10}\tilde{c}(1,t)
\end{aligned}$$

Backstepping PDE Estimator

Estimator

$$\begin{aligned}
\frac{\partial \hat{c}}{\partial t}(r,t) &= \varepsilon \frac{\partial^2 \hat{c}}{\partial r^2}(r,t) + p_1(r)\left[c(1,t) - \hat{c}(1,t)\right] \\
\hat{c}(0,t) &= 0 \\
\frac{\partial \hat{c}}{\partial r}(1,t) - \hat{c}(1,t) &= -q\rho I(t) + p_{10}\left[c(1,t) - \hat{c}(1,t)\right] \\
\tilde{c}(1,t) &= c(1,t) - \hat{c}(1,t)
\end{aligned}$$

The Concept

$$\tilde{c}(r,t) = \tilde{w}(r,t) - \int_r^1 p(r,s)\tilde{w}(s)ds$$ Backstepping Transformation

$$\frac{\partial \tilde{w}}{\partial t}(r,t) = \varepsilon \frac{\partial^2 \tilde{w}}{\partial r^2}(r,t) + \lambda \tilde{w}(r,t)$$ Exp. Stable Target System

$$\tilde{w}(0,t) = 0$$

$$W(t) = \frac{1}{2}\int_0^1 \tilde{w}^2(x,t)dx$$

$$\frac{\partial \tilde{w}}{\partial r}(1,t) = \frac{1}{2}\tilde{w}(1,t)$$

$$\dot{W}(t) \leq -\gamma W(t)$$

Backstepping PDE Estimator

Estimator

$$\begin{aligned}
\frac{\partial \hat{c}}{\partial t}(r,t) &= \varepsilon \frac{\partial^2 \hat{c}}{\partial r^2}(r,t) + p_1(r)\left[c(1,t) - \hat{c}(1,t)\right] \\
\hat{c}(0,t) &= 0 \\
\frac{\partial \hat{c}}{\partial r}(1,t) - \hat{c}(1,t) &= -q\rho I(t) + p_{10}\left[c(1,t) - \hat{c}(1,t)\right] \\
\tilde{c}(1,t) &= c(1,t) - \hat{c}(1,t)
\end{aligned}$$

Kernel PDE

$$p(r,s) : \mathcal{D} \to \mathbb{R}, \qquad \mathcal{D} = \{(r,s) | 0 \le r \le s \le 1\}$$

$$p_{rr}(r,s) - p_{ss}(r,s) = \frac{\lambda}{\varepsilon} p(r,s) \qquad p_1(r) = -p_s(r,1) - \frac{1}{2} p(r,1)$$

$$p(0,s) = 0 \qquad p_{10} = \frac{3 - \lambda/\varepsilon}{2}$$

$$p(r,r) = \frac{\lambda}{2\varepsilon} r$$

Backstepping PDE Estimator

Estimator

$$\begin{aligned}
\frac{\partial \hat{c}}{\partial t}(r,t) &= \varepsilon \frac{\partial^2 \hat{c}}{\partial r^2}(r,t) + p_1(r)\left[c(1,t) - \hat{c}(1,t)\right] \\
\hat{c}(0,t) &= 0 \\
\frac{\partial \hat{c}}{\partial r}(1,t) - \hat{c}(1,t) &= -q\rho I(t) + p_{10}\left[c(1,t) - \hat{c}(1,t)\right] \\
\tilde{c}(1,t) &= c(1,t) - \hat{c}(1,t)
\end{aligned}$$

Explicit Solution to Estimator Gains

$$p_1(r) = \frac{-\lambda r}{2\varepsilon z}\left[I_1(z) - \frac{2\lambda}{\varepsilon z} I_2(z)\right] \qquad \text{where} \quad z = \sqrt{\frac{\lambda}{\varepsilon}(r^2 - 1)}$$

$$p_{10} = \frac{1}{2}\left(3 - \frac{\lambda}{\varepsilon}\right)$$

The SOH Estimation Problem

Problem Statement

Estimate physical parameters from measurements $I(t), V(t)$ and SPM

The SOH Estimation Problem

Problem Statement

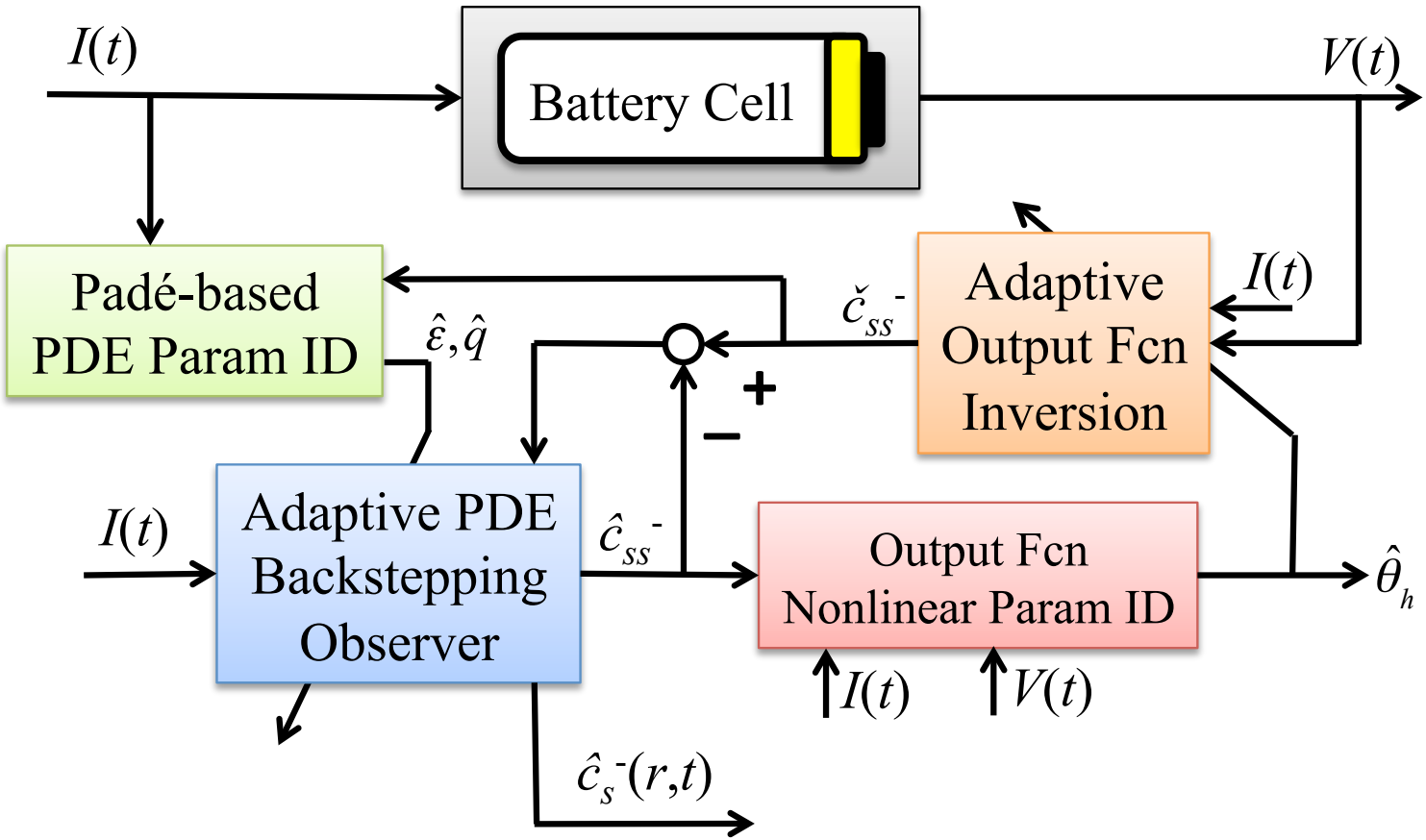
Estimate physical parameters from measurements $I(t), V(t)$ and SPM

Relate uncertain parameters to SOH-related concepts

- Capacity fade
- Power fade

Adaptive Observer

Combined State & Parameter Estimation



Output Function Nonlinear Parameter ID

Nonlinearly Parameterized Output

$$V(t) = h(c_{ss}^{-}(t), I(t); \theta)$$

- θ contains many parameters
- Linear dependence b/w parameters?

Output Function Nonlinear Parameter ID

Nonlinearly Parameterized Output

$$V(t) = h(c_{ss}^{-}(t), I(t); \theta)$$

- θ contains many parameters
- Linear dependence b/w parameters?

Identifiability Analysis

- Linearly independent parameter subset : $\theta_h = [n_{Li}, R_f]^T$
  - n_{Li} : Moles of cyclable Li (Capacity Fade)
  - R_f : Resistance of current collectors, electrolyte, etc. (Power Fade)

Output Function Nonlinear Parameter ID

Nonlinearly Parameterized Output

$$V(t) = h(c_{ss}^{-}(t), I(t); \theta)$$

- θ contains many parameters
- Linear dependence b/w parameters?

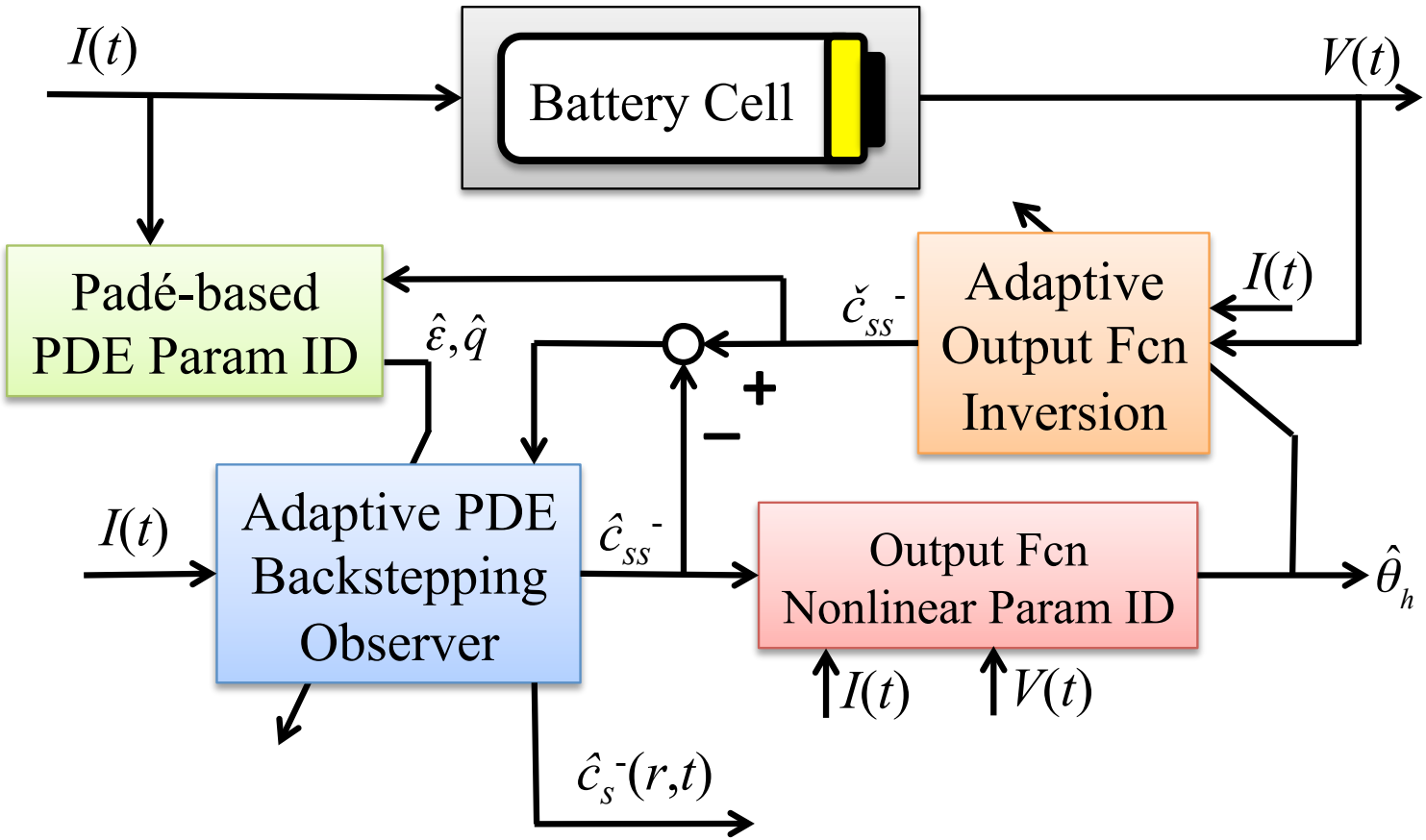
Identifiability Analysis

- Linearly independent parameter subset : $\theta_h = [n_{Li}, R_f]^T$
  - n_{Li} : Moles of cyclable Li (Capacity Fade)
  - R_f : Resistance of current collectors, electrolyte, etc. (Power Fade)

Apply nonlinear recursive least squares to θ_h

Adaptive Observer

Combined State & Parameter Estimation



Adaptive Output Function Inversion

Require $c_{ss}^{-}(t)$ for output error injection

Adaptive Output Function Inversion

Require $c_{ss}^{-}(t)$ for output error injection

Nonlinear Function Inversion

Solve $g(c_{ss}^{-}, t) = 0$ for c_{ss}^{-}, where

$$g(c_{ss}^{-}, t) = h(c_{ss}^{-}(t), I(t); \hat{\theta}_h) - V(t)$$

Adaptive Output Function Inversion

Require $c_{ss}^{-}(t)$ for output error injection

Nonlinear Function Inversion

Solve $g(c_{ss}^{-}, t) = 0$ for c_{ss}^{-}, where

$$g(c_{ss}^{-}, t) = h(c_{ss}^{-}(t), I(t); \hat{\theta}_h) - V(t)$$

Newton's Method

Main Idea: Construct ODE with exp. stable equilibrium $g(c_{ss}^{-}, t) = 0$

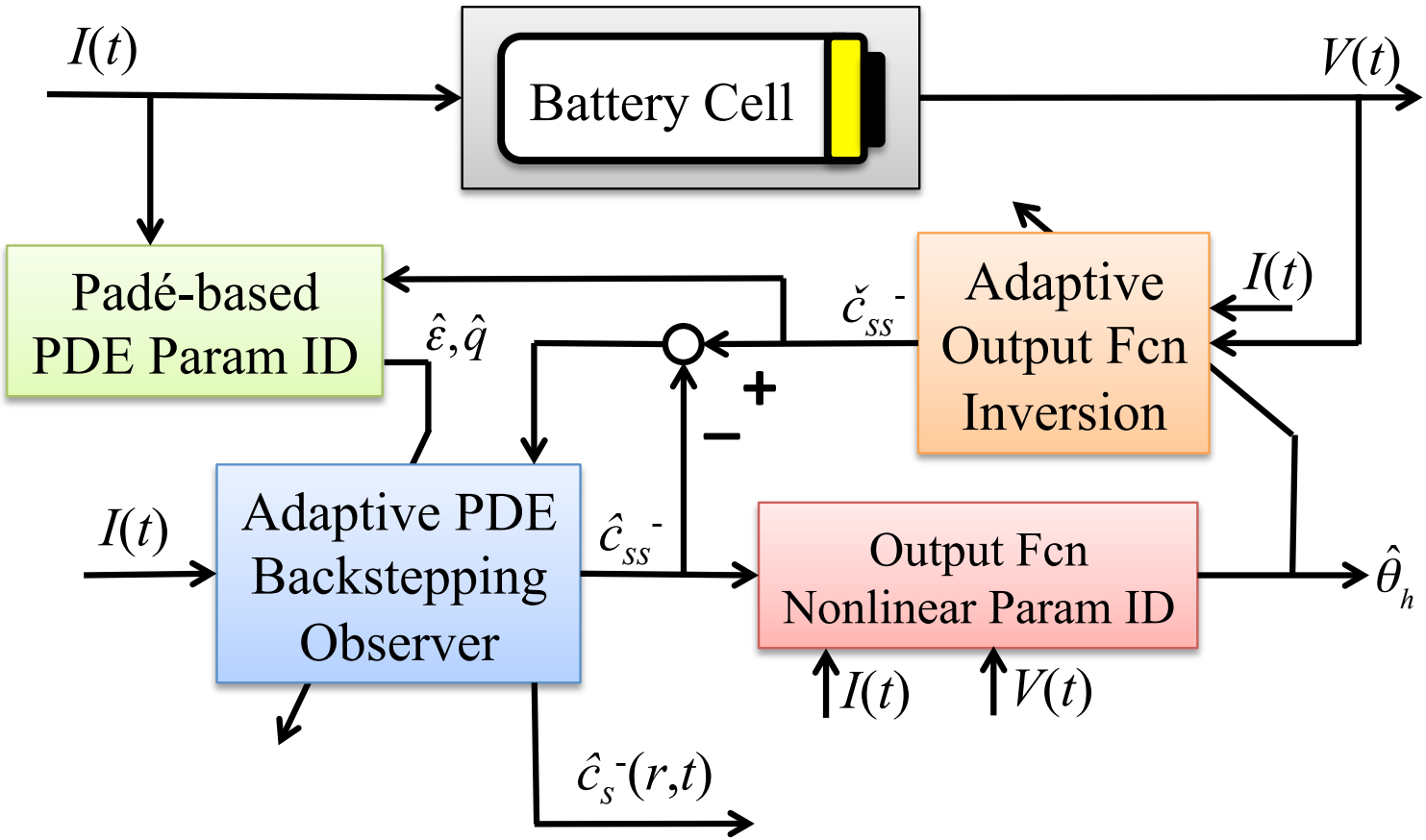
$$\frac{d}{dt}\left[g(\check{c}_{ss}^{-}, t)\right] = -\gamma g(\check{c}_{ss}^{-}, t)$$

expands to a Newton's method update law:

$$\frac{d}{dt}\check{c}_{ss}^{-} = -\frac{\gamma g(\check{c}_{ss}^{-}, t) + \frac{\partial g}{\partial t}(\check{c}_{ss}^{-}, t)}{\frac{\partial g}{\partial c_{ss}^{-}}(\check{c}_{ss}^{-}, t)}$$

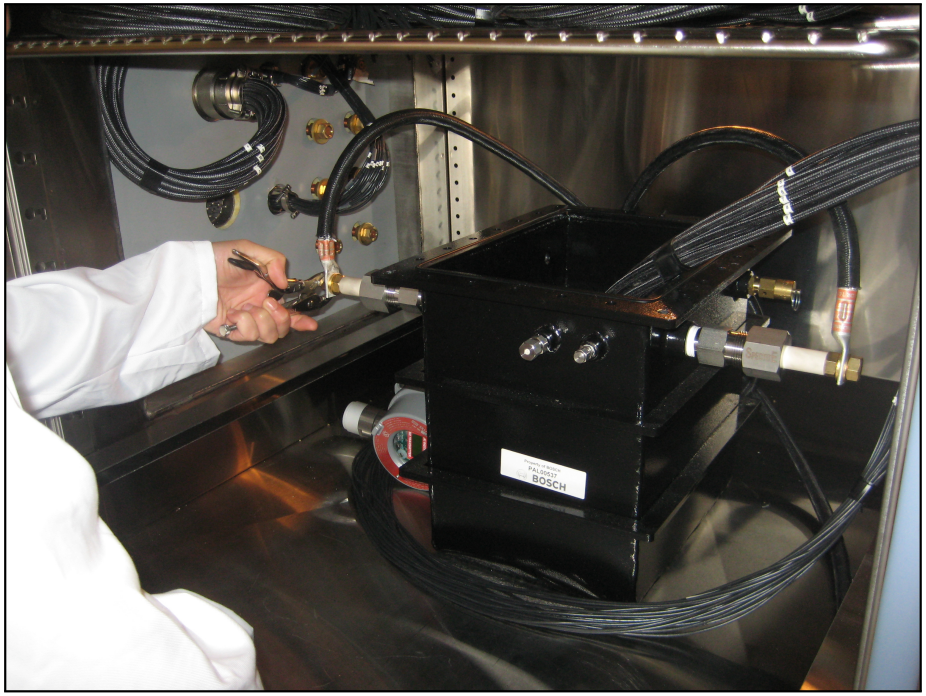
Adaptive Observer

Combined State & Parameter Estimation



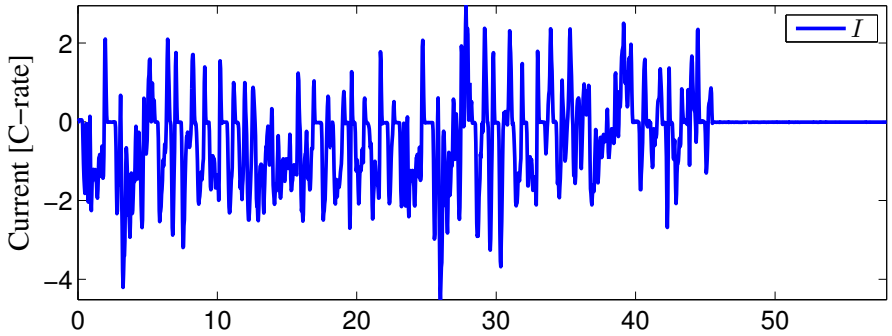
Experimental Testing | ARPA-E AMPED Program





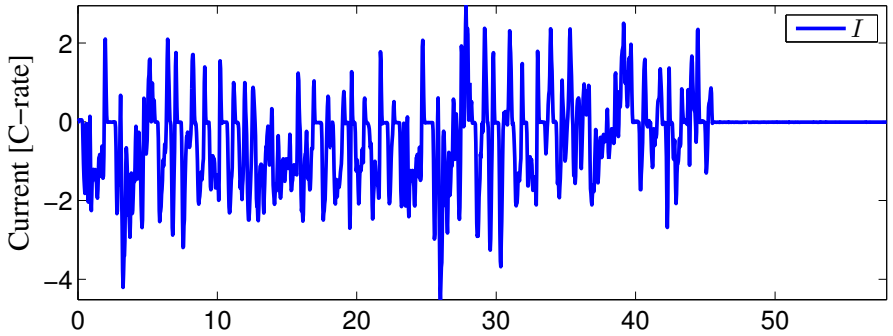
Results

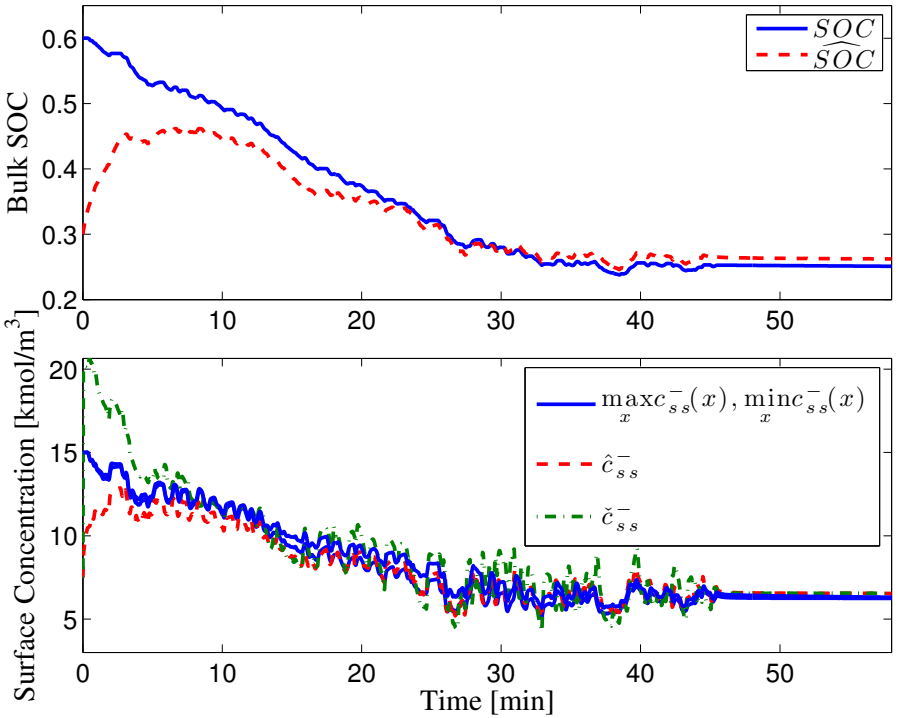
UDDS Drive Cycle Input



Results

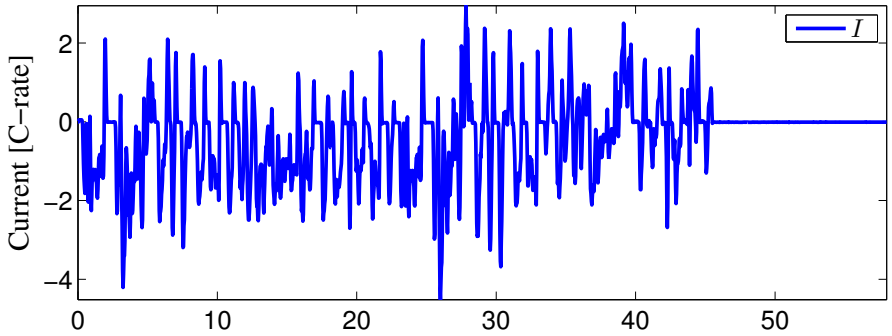
UDDS Drive Cycle Input

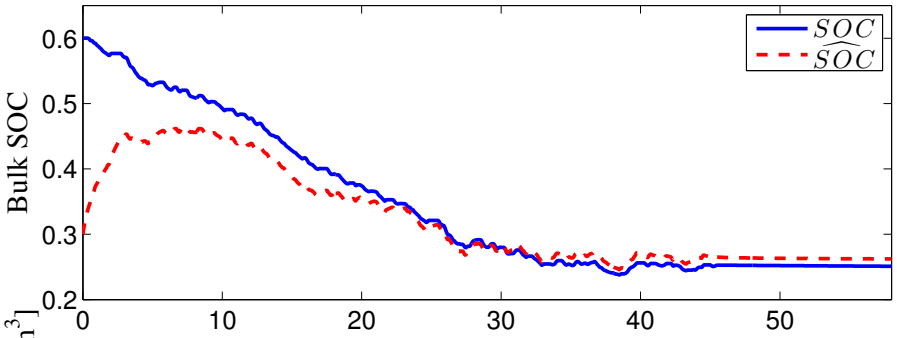


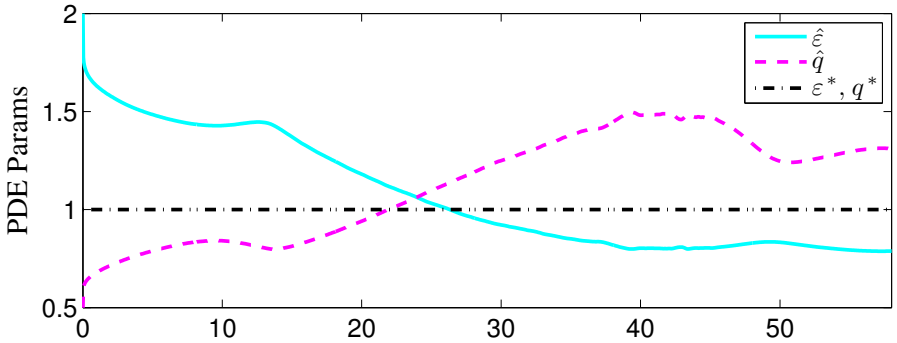


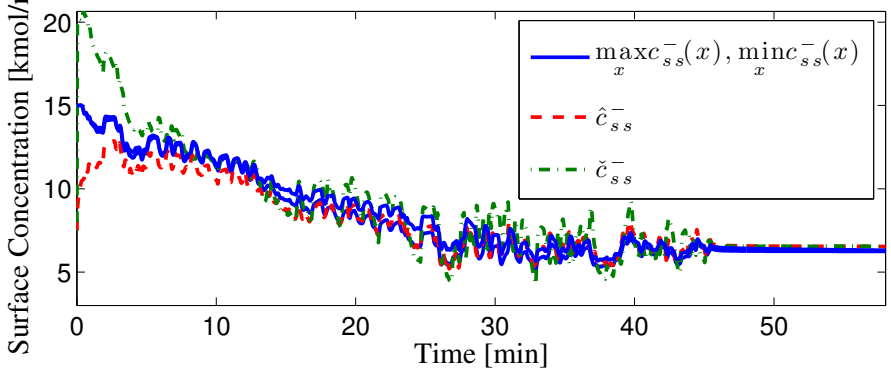
Results

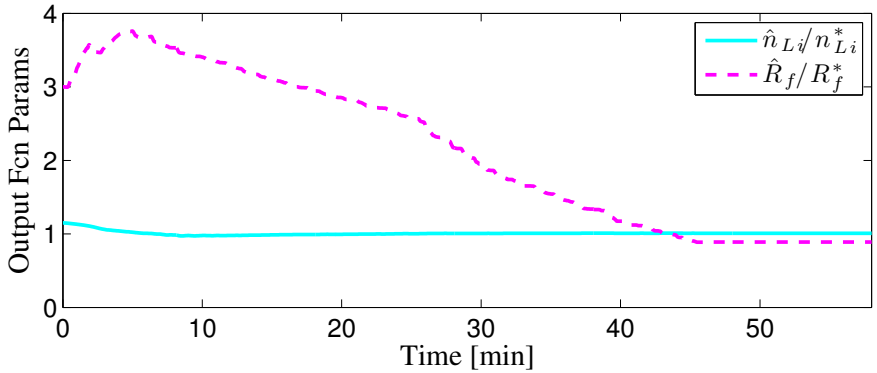
UDDS Drive Cycle Input





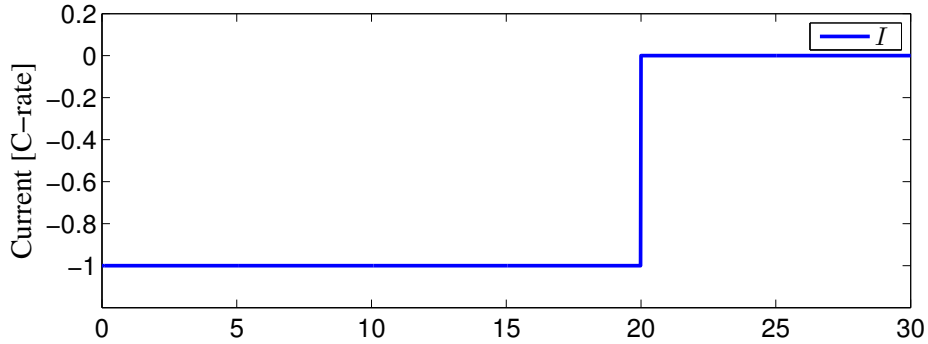


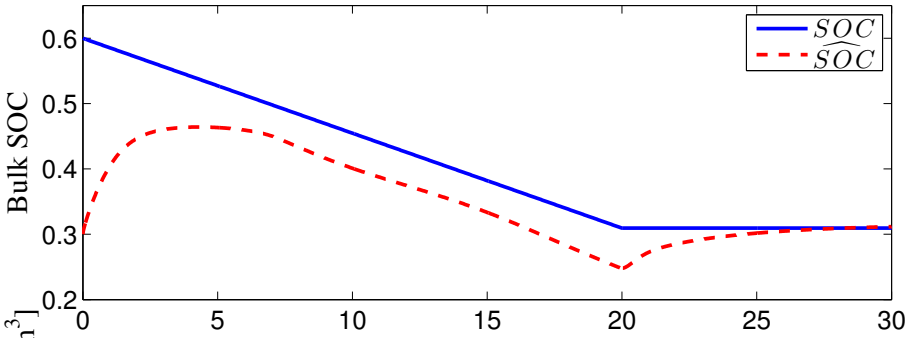


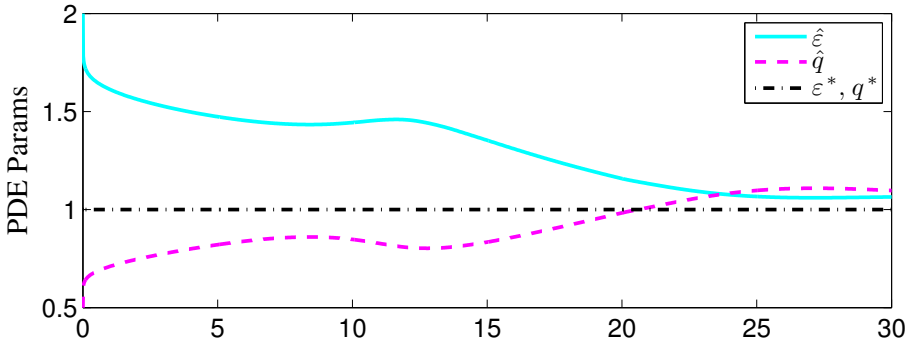


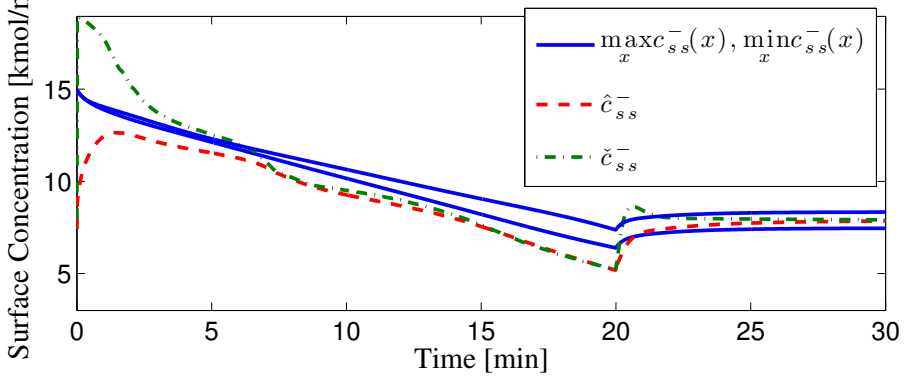
Results

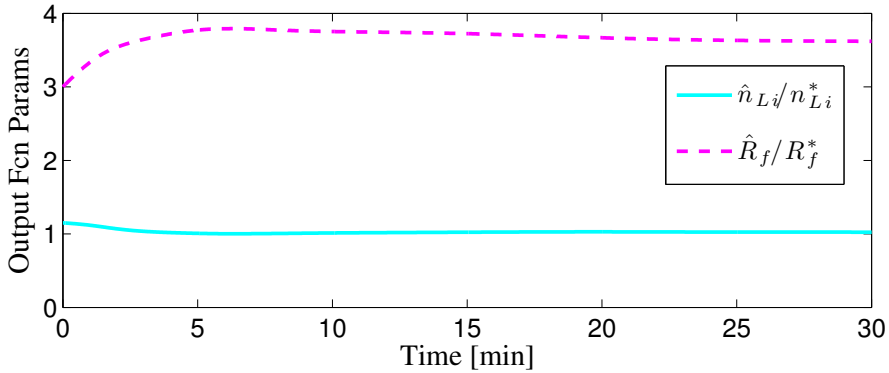
Constant 1C Discharge





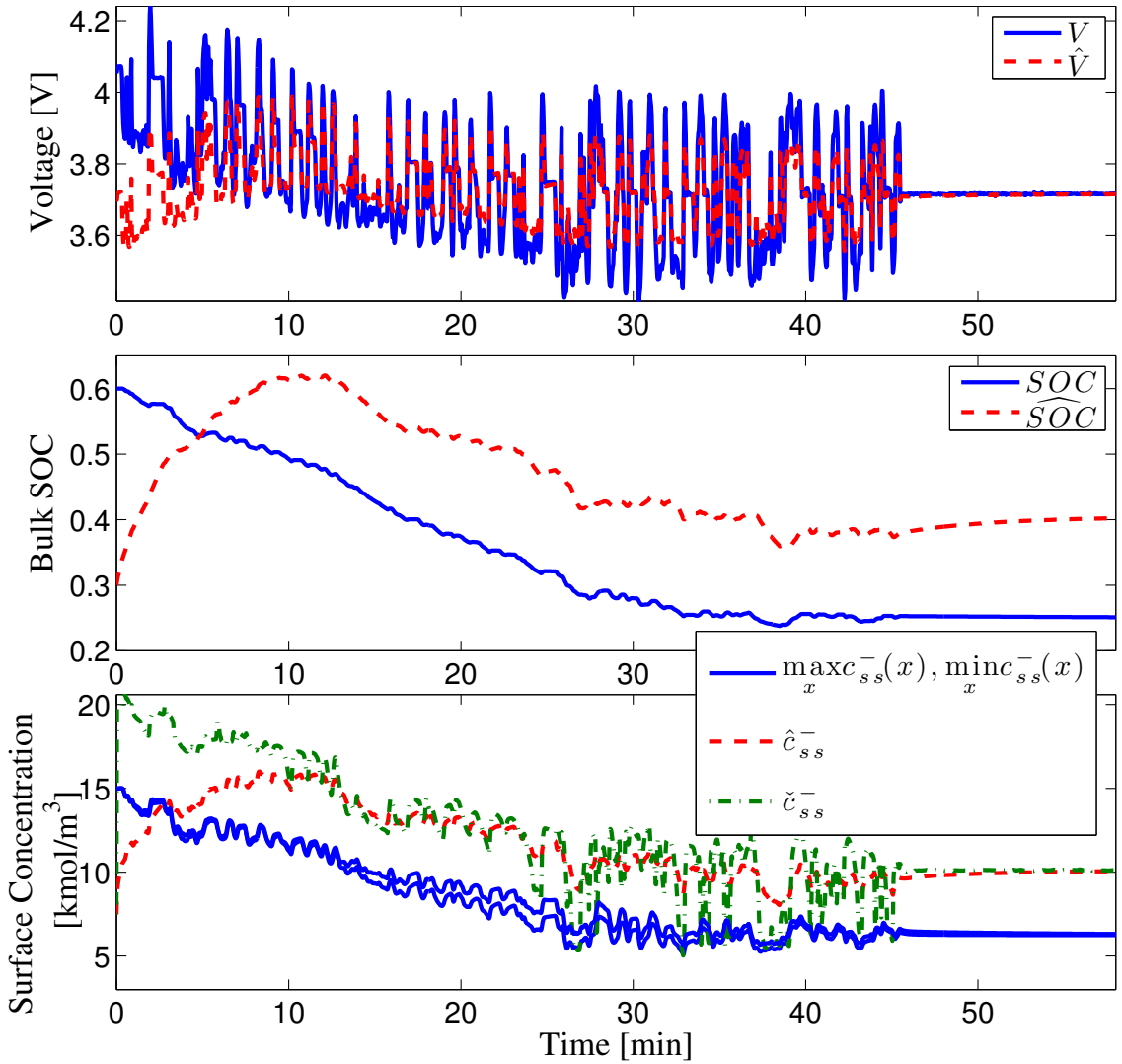






Results

No Parameter Adaption - Bias in State Estimates



Outline

1. Batteries
   - [Electrochemical Modeling] Incorporating Physics
   - [SOC/SOH Estimation] Looking Inside w/ Models, Meas., and Math
   - [Constrained Control] Operate at the Limits, Safely
2. Demand Response in Smart Grids
3. Future

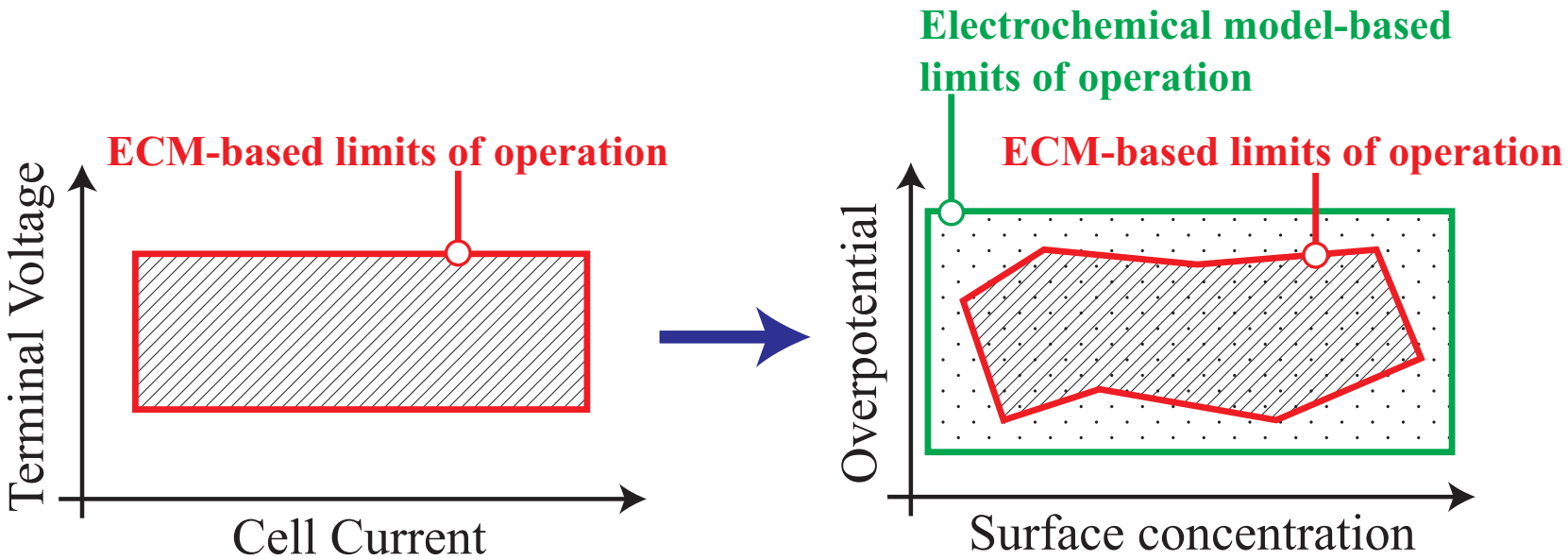
Operate Batteries at their Physical Limits



Operate Batteries at their Physical Limits

Problem Statement

Given accurate state estimates, govern the electric current such that safe operating constraints are satisfied.

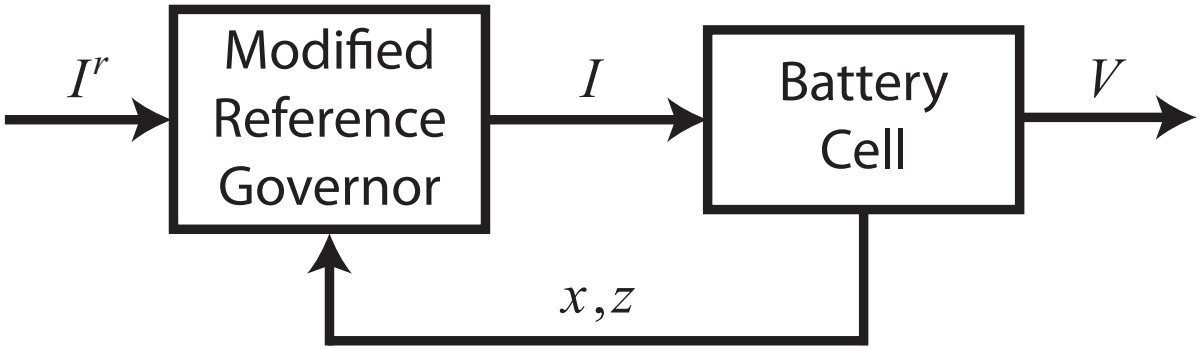


Constraints

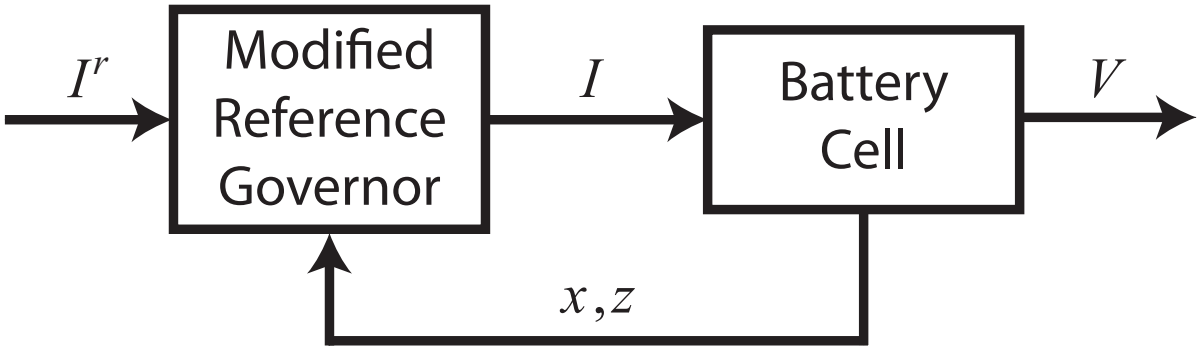
Variable	Definition	Constraint
$I(t)$	Current	Power electronics limits
$c_s^{\pm}(x,r,t)$	Li concentration in solid	Saturation/depletion
$\frac{\partial c_s^{\pm}}{\partial r}(x,r,t)$	Li concentration gradient	Diffusion-induced stress
$c_e(x,t)$	Li concentration in electrolyte	Saturation/depletion
$T(t)$	Temperature	High/low temps accel. aging
$\eta_s(x,t)$	Side-rxn overpotential	Li plating, dendrite formation

Each variable, y, must satisfy $y_{\min} \leq y \leq y_{\max}$.

The Algorithm: Modified Reference Governor (MRG)



The Algorithm: Modified Reference Governor (MRG)

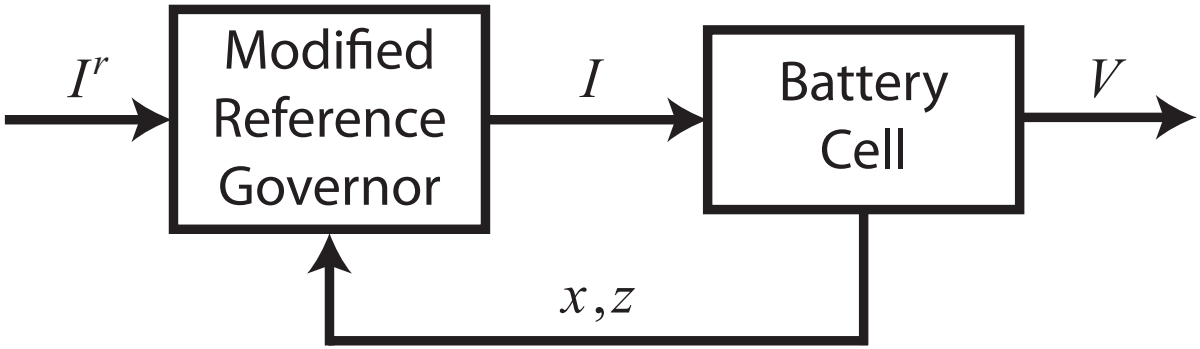


MRG Equations

$$I[k+1] = \beta^*[k] I^r[k], \qquad \beta^* \in [0,1],$$

$$\beta^*[k] = \max\{\beta \in [0,1] : (x(t), z(t)) \in \mathcal{O}\}$$

The Algorithm: Modified Reference Governor (MRG)



MRG Equations

$$I[k+1] = \beta^*[k] I^r[k], \qquad \beta^* \in [0,1],$$

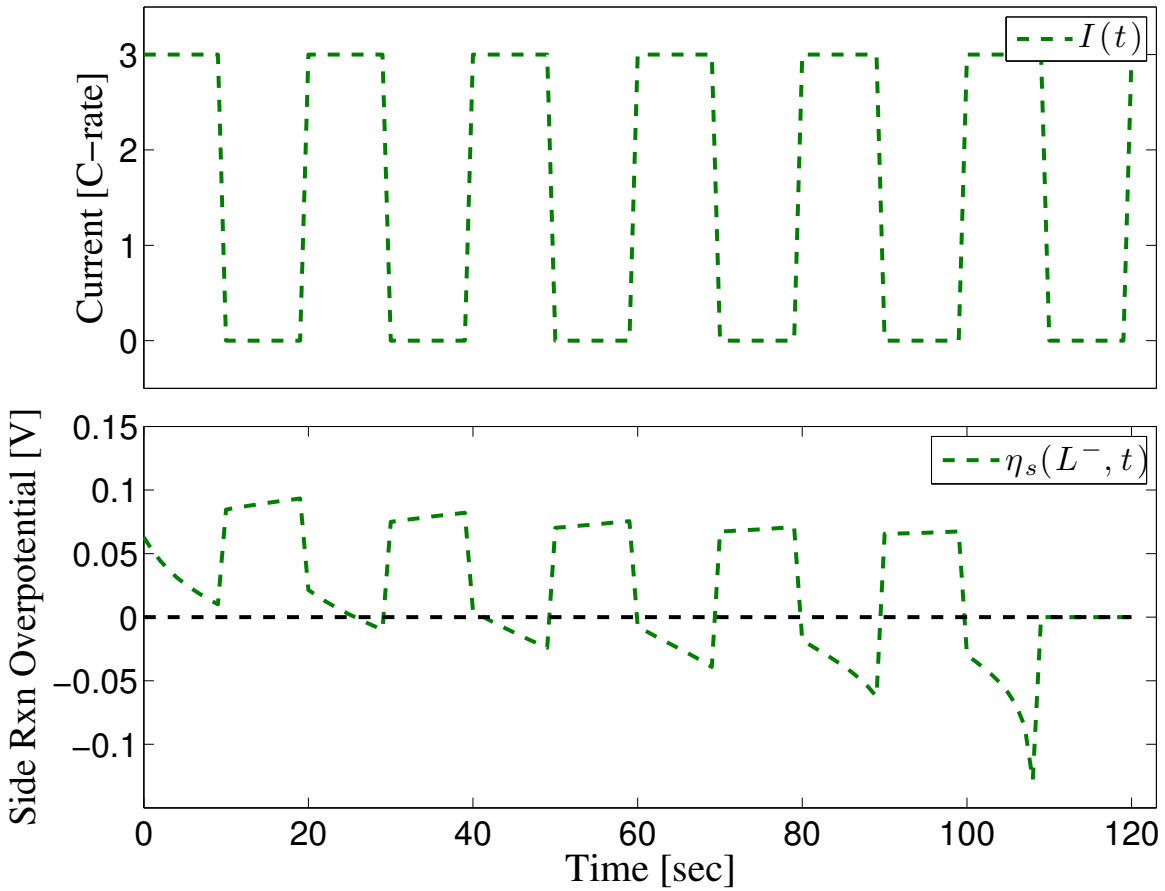
$$\beta^*[k] = \max\{\beta \in [0,1] : (x(t), z(t)) \in \mathcal{O}\}$$

Def'n: Admissible Set $\mathcal{O}$

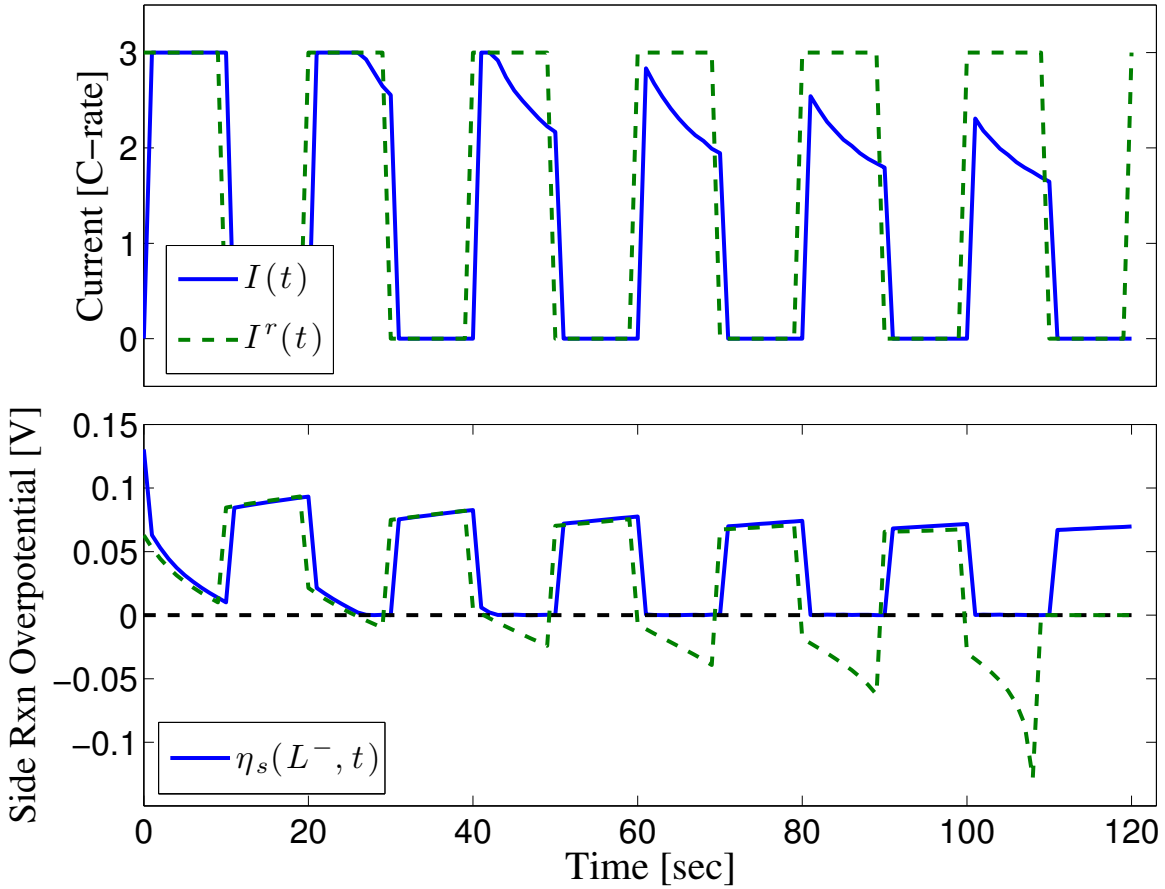
$$\mathcal{O} = \{(x(t), z(t)) : y(\tau) \in \mathcal{Y}, \forall \tau \in [t, t+T_s]\}$$

$$\begin{aligned} \dot{x}(t) &= f(x(t), z(t), \beta I^r) \\ 0 &= g(x(t), z(t), \beta I^r) \\ y(t) &= C_1 x(t) + C_2 z(t) + D \cdot \beta I^r + E \end{aligned}$$

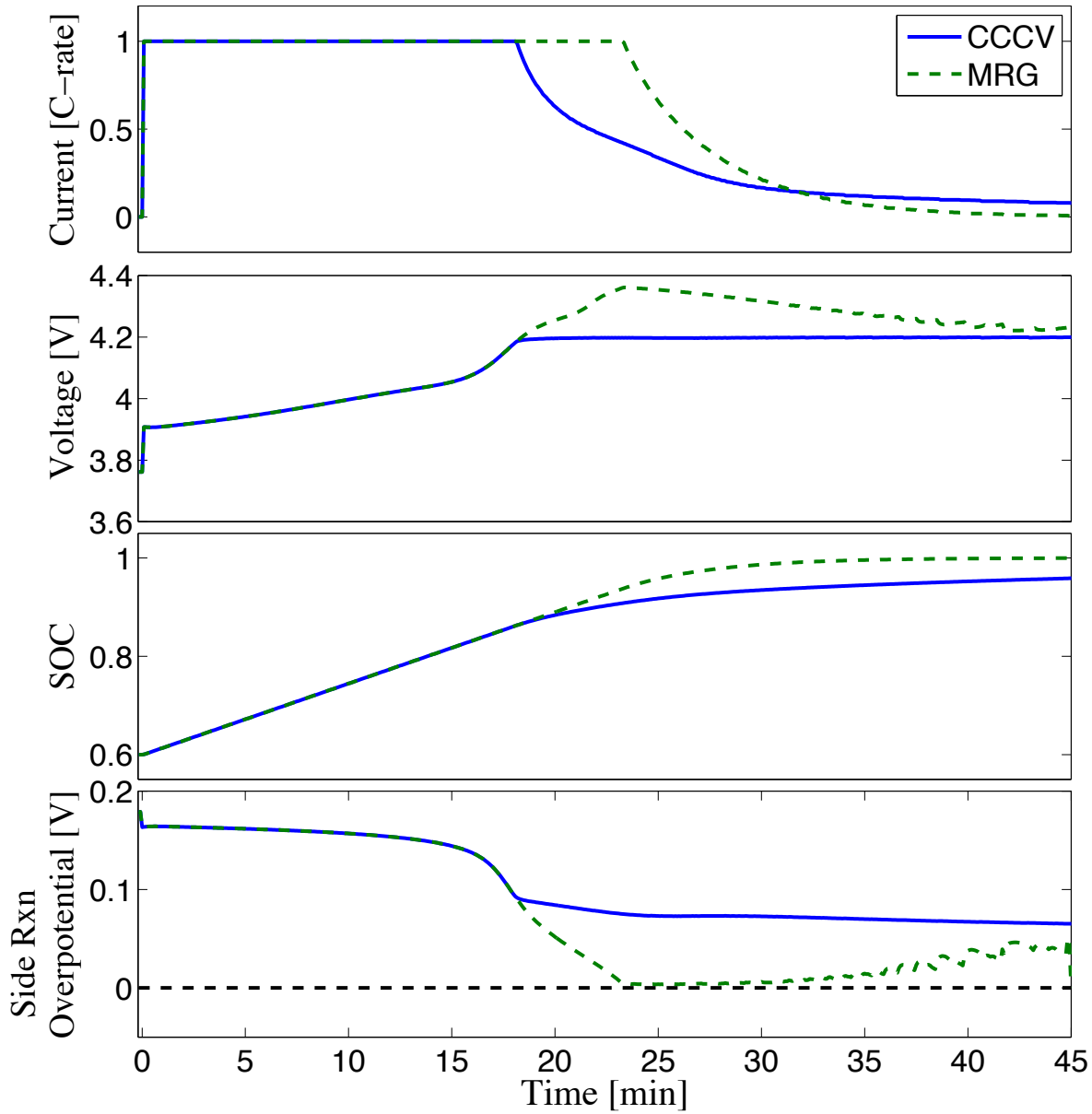
Constrained Control of EChem States



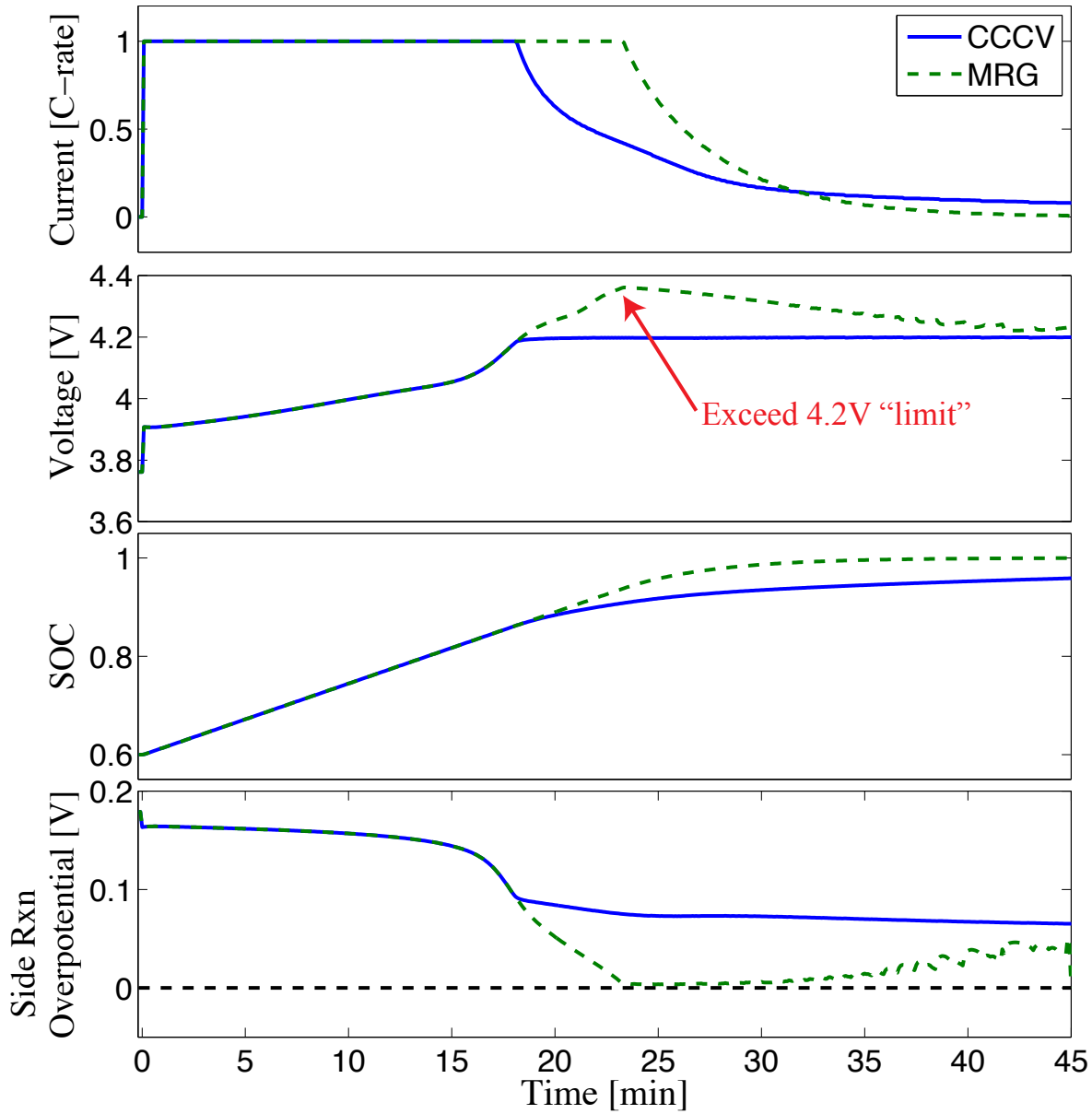
Constrained Control of EChem States



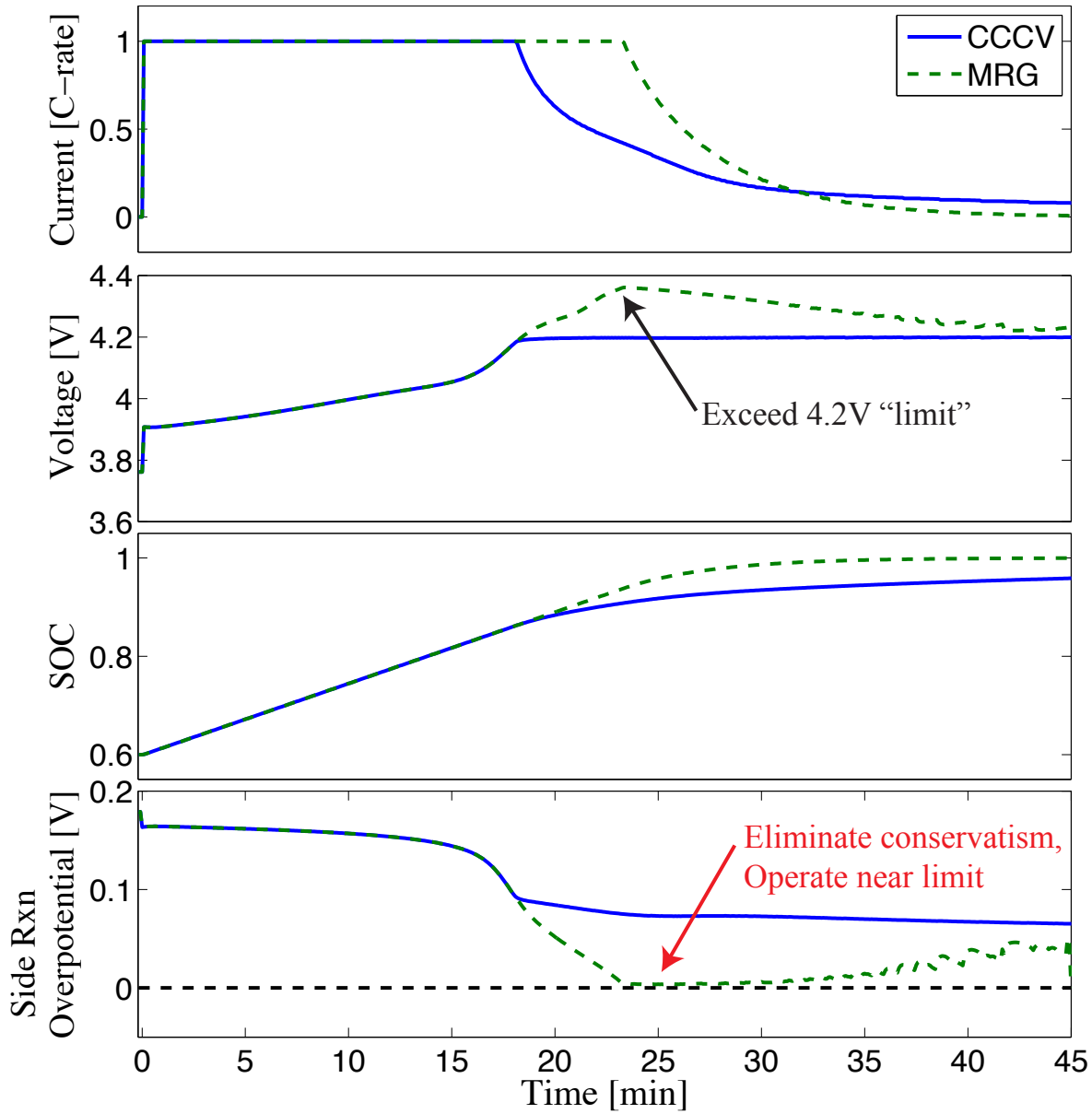
Application to Charging



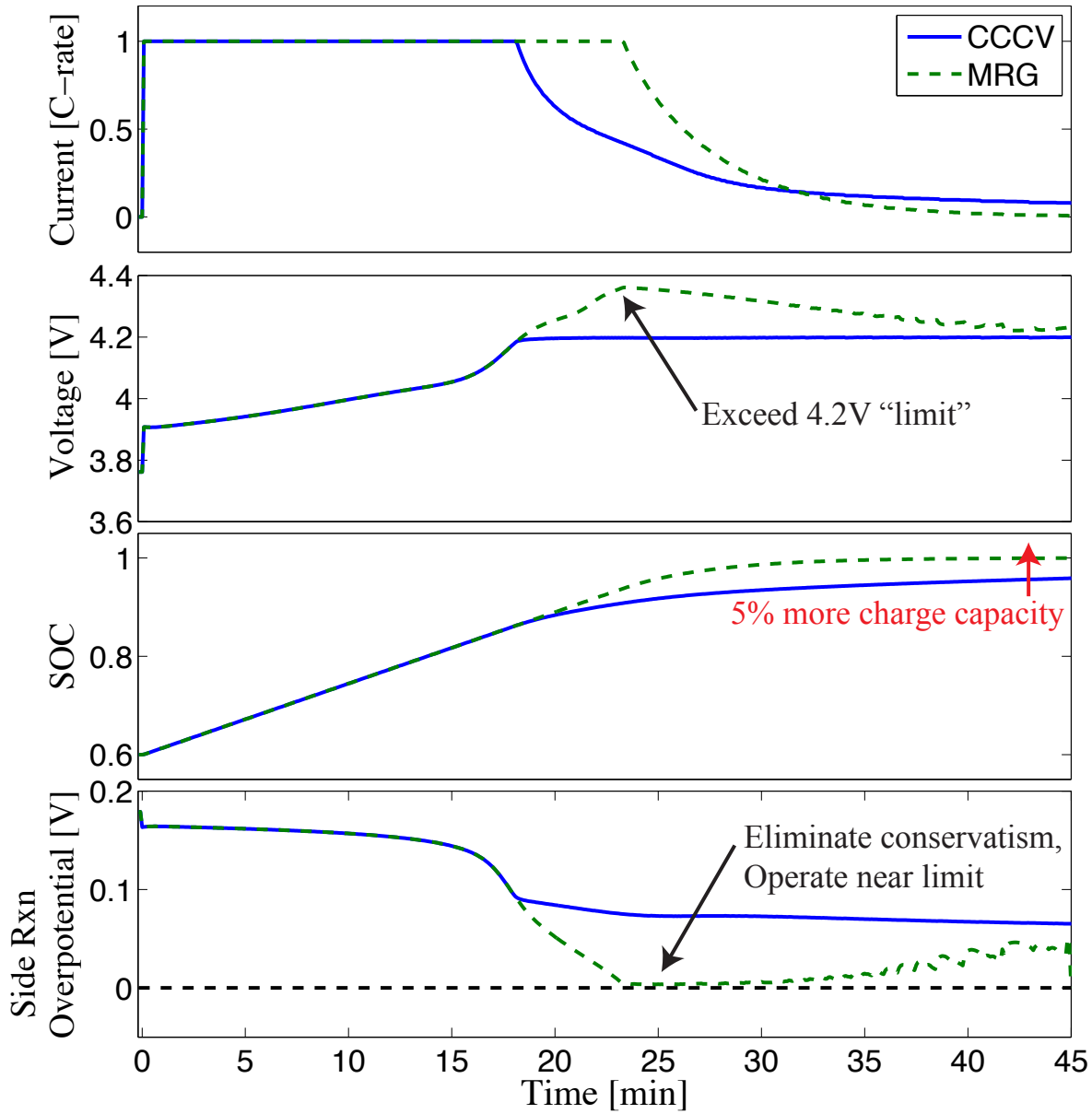
Application to Charging



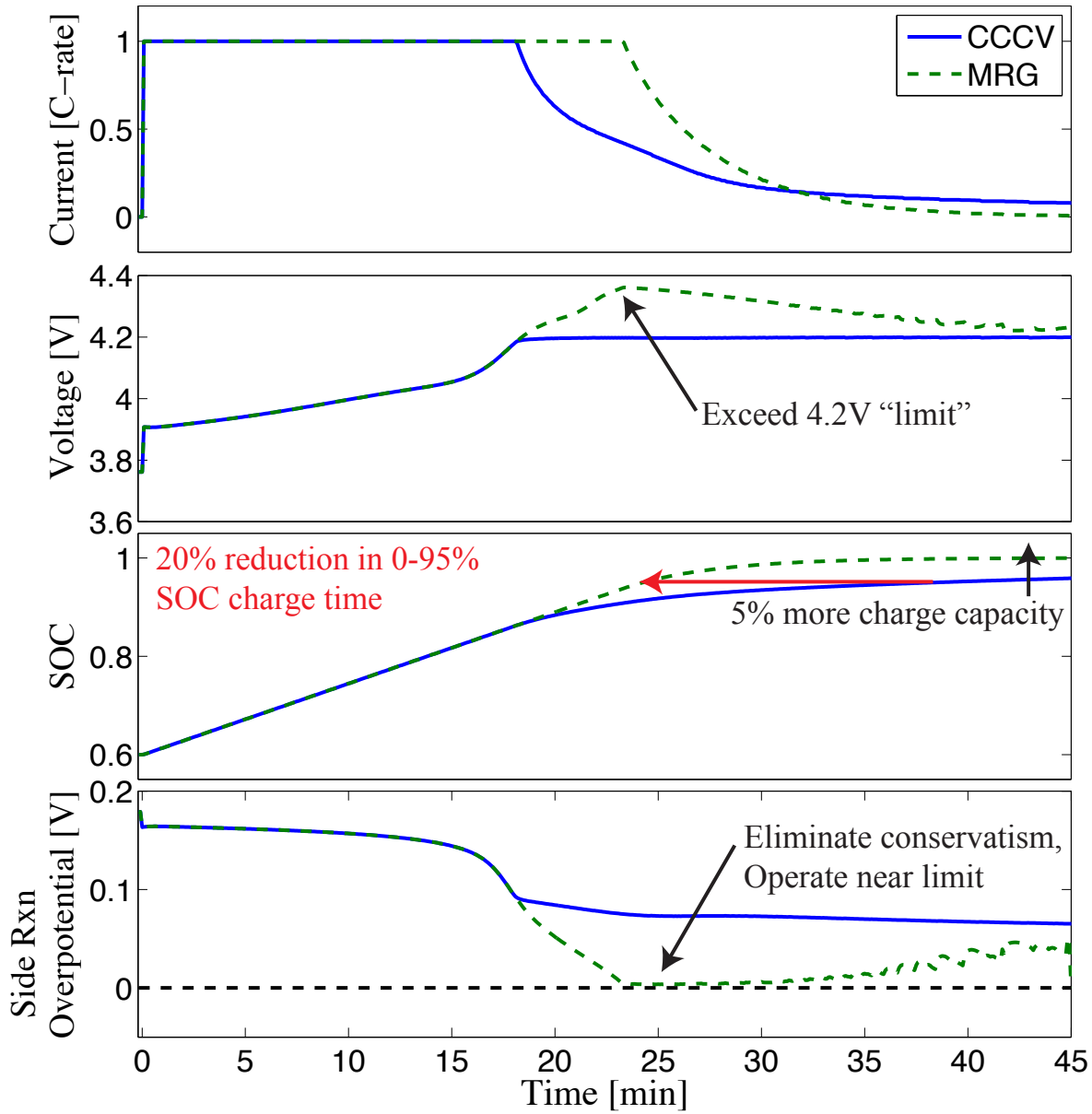
Application to Charging



Application to Charging



Application to Charging

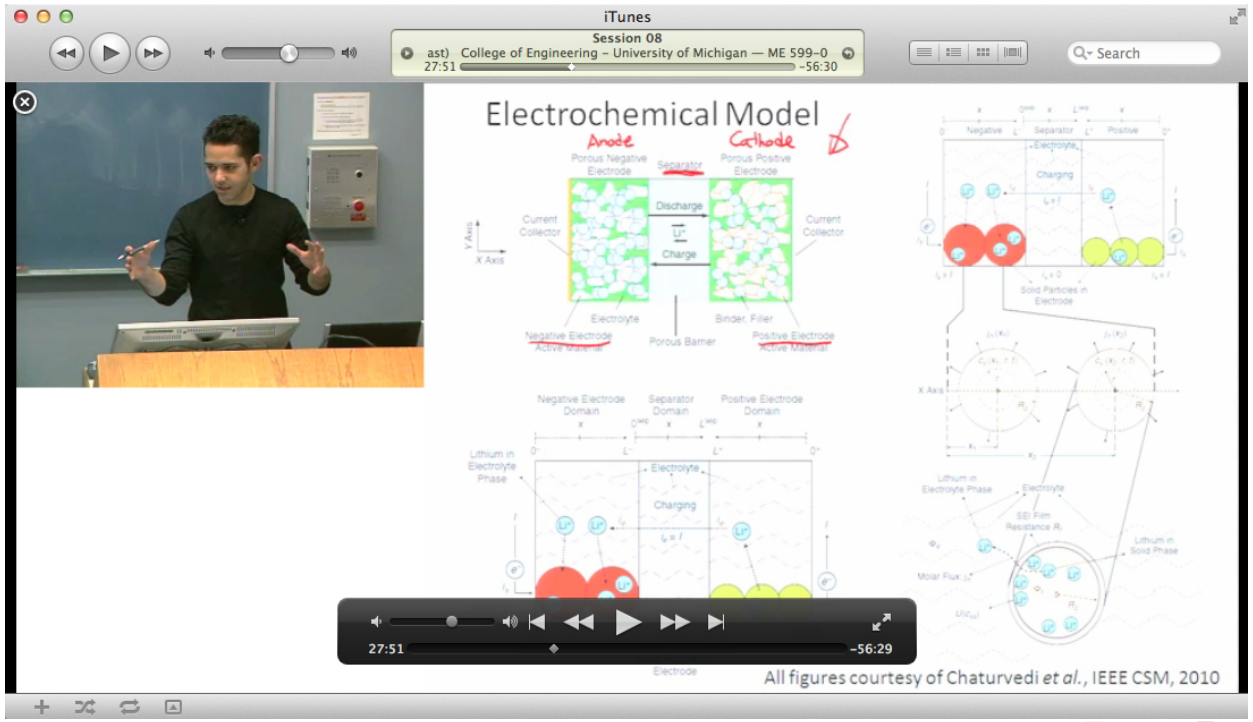


Battery Systems and Control Course

Funded by DOE-ARRA, University of Michigan

Enrollment

- Winter 2010: 59 + 5 distance
- Winter 2011: 50 + 26 distance
- ME, EE, ChemE, CS, Energy Systems, MatSci, Physics, Math
- Undergraduates
- Graduate students
- Professionals
  - Tesla Motors, General Motors, Roush, US Army



Summary of Contributions

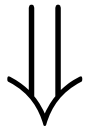
Simultaneous SOC/SOH estimation
of physically meaningful variables via electrochemical models,
PDE estimation theory, and adaptive control.

Constrained control of batteries
via an electrochemical model
and reference governors.

Impact through education.

Energy Crisis Solutions

Integrate variable renewables



Energy storage

(e.g., batteries)

Decrease energy waste

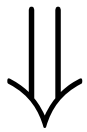


Intelligent energy management

(e.g., smart grids)

Energy Crisis Solutions

Integrate variable renewables



Energy storage

(e.g., batteries)

Decrease energy waste



Intelligent energy management

(e.g., smart grids)

Outline

1. Batteries
   - [Electrochemical Modeling] Incorporating Physics
   - [SOC/SOH Estimation] Looking Inside w/ Models, Meas., and Math
   - [Constrained Control] Operate at the Limits, Safely
2. Demand Response in Smart Grids
3. Future

The Renewable Integration Problem

Needs: 33% renewables in CA by 2020

Obstacle: Must install 4 GW reserve capacity to support variability

Some Interesting Facts

Thermostatically Controlled Loads (TCLs)	50% of U.S. energy consumption is TCLs
	Only 11% of thermostats are programmed

The Punchline

Flexible loads (e.g. TCLs) can absorb variability in renewable generation

The Renewable Integration Problem

Needs: 33% renewables in CA by 2020

Obstacle: Must install 4 GW reserve capacity to support variability

Some Interesting Facts

Thermostatically Controlled Loads (TCLs)	50% of U.S. energy consumption is TCLs
	Only 11% of thermostats are programmed

The Punchline

Flexible loads (e.g. TCLs) can absorb variability in renewable generation

The Renewable Integration Problem

Needs: 33% renewables in CA by 2020

Obstacle: Must install 4 GW reserve capacity to support variability

Some Interesting Facts

Thermostatically Controlled Loads (TCLs)	50% of U.S. energy consumption is TCLs
	Only 11% of thermostats are programmed

The Punchline

Flexible loads (e.g. TCLs) can absorb variability in renewable generation

The Renewable Integration Problem

Needs: 33% renewables in CA by 2020

Obstacle: Must install 4 GW reserve capacity to support variability

Some Interesting Facts

Thermostatically Controlled Loads (TCLs)	50% of U.S. energy consumption is TCLs
	Only 11% of thermostats are programmed

The Punchline

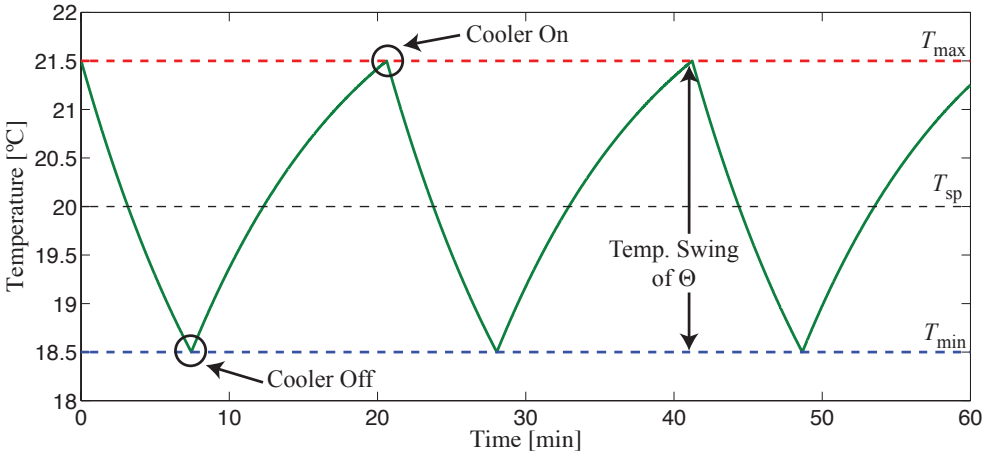
Flexible loads (e.g. TCLs) can absorb variability in renewable generation

Modeling Aggregations of TCLs

Individual TCL models

⇓

(Tens of) Thousands of hybrid ODEs

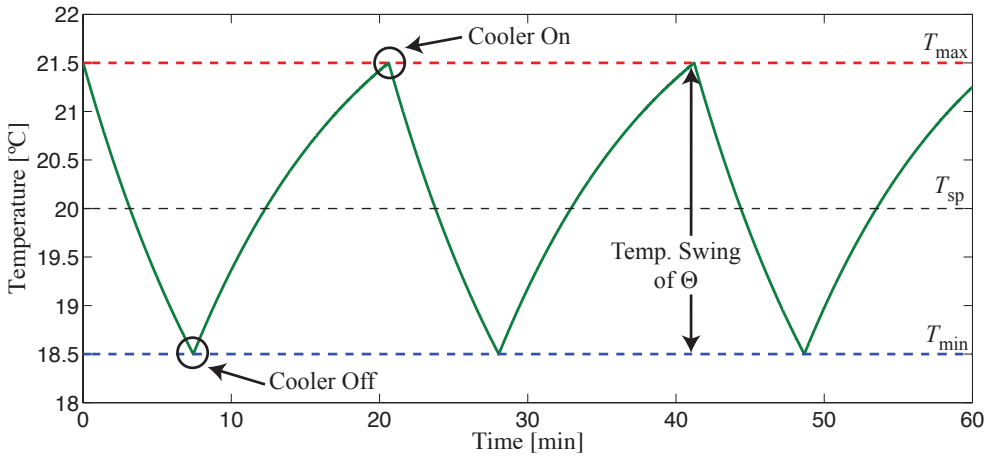


Modeling Aggregations of TCLs

Individual TCL models

⇓

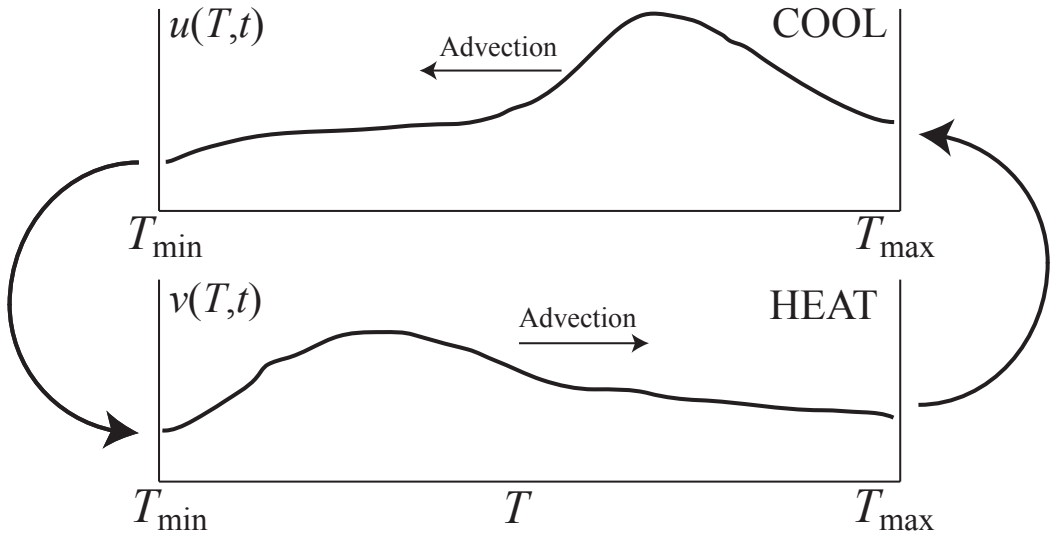
(Tens of) Thousands of hybrid ODEs



Model **aggregations** of TCLs

⇓

Two coupled linear PDEs



$u(T,t)$	# TCLs/°C, in COOL state, @ temp T, time t
$v(T,t)$	# TCLs/°C, in HEAT state, @ temp T, time t

On-campus Wireless Sensor Network for Demand Response

Goal:
Match demand to renewable generation

Measure:

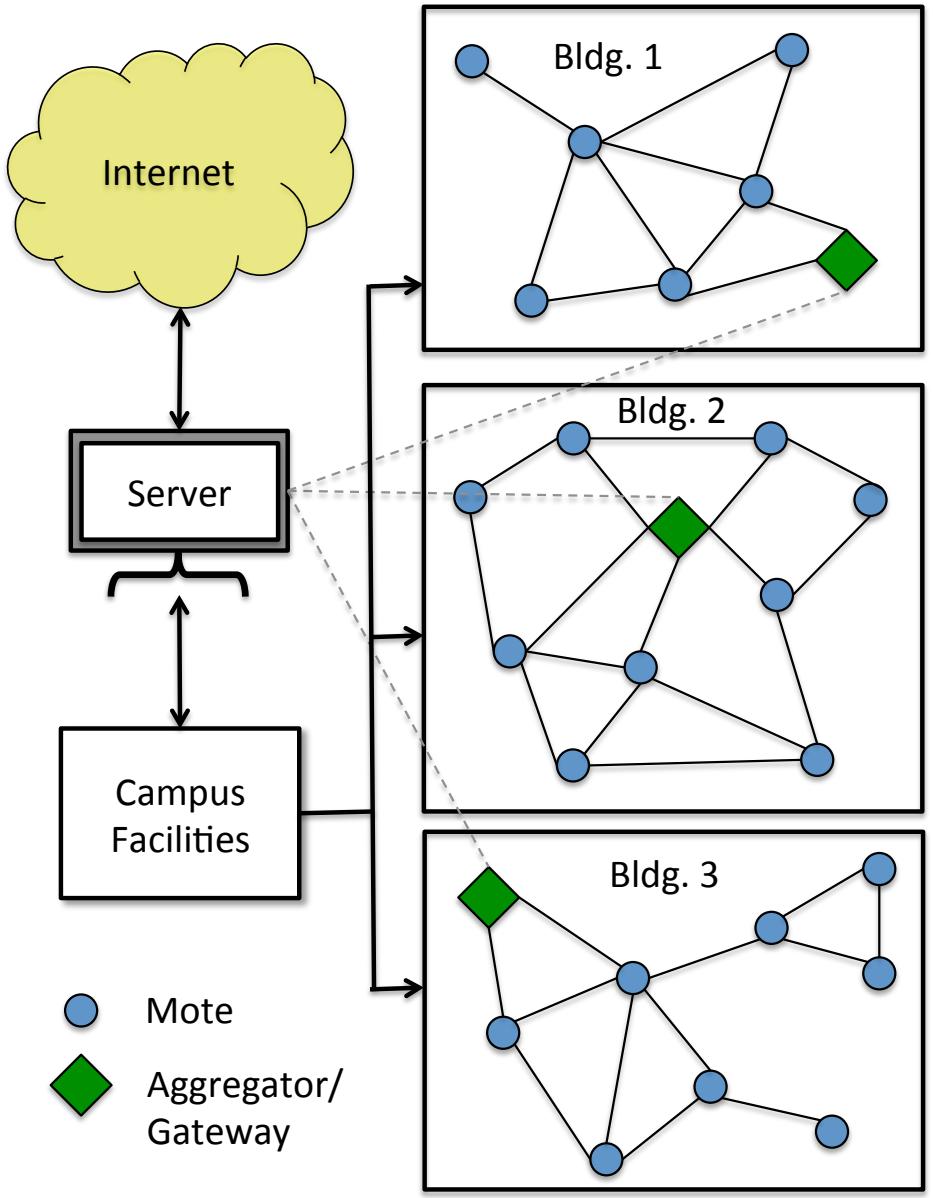
- Temperature
- Humidity
- Luminosity
- Presence (PIR)

Actuate:

- Thermostat set-point



Libelium Waspmotes and Meshlium Gateway



Outline

1. Batteries
   - [Electrochemical Modeling] Incorporating Physics
   - [SOC/SOH Estimation] Looking Inside w/ Models, Meas., and Math
   - [Constrained Control] Operate at the Limits, Safely
2. Demand Response in Smart Grids
3. Future

Future

Battery Systems and Control	Estimator + Ref. Governor
	Observability for full model
	Electrochemical-Thermal Dynamics
	Experimental Testing
	Materials Science $\Leftrightarrow$ Dynamics Systems & Control

Demand Response for Renewable Integration	Campus implementation
	Predictive control via forecasting
	Vehicle-to-grid
	Price-based control

Core Philosophy:

$$\text{(Dynamical models of physical phenomena)}$$
$$+ \text{ (novel control paradigms)}$$
$$= \text{(transformative advancements)}$$


Publications available at http://flyingv.ucsd.edu/smoura/

Managing Overparameterization

$$\hat{\theta}_{pde} = \begin{bmatrix} \widehat{q\varepsilon^2} \\ \widehat{q\varepsilon} \\ \hat{\varepsilon} \end{bmatrix} \longrightarrow \begin{bmatrix} \hat{\varepsilon} \\ \hat{q} \end{bmatrix} = \hat{\theta}_{\varepsilon q}$$

Managing Overparameterization

$$\hat{\theta}_{pde} = \begin{bmatrix} \widehat{q\varepsilon^2} \\ \widehat{q\varepsilon} \\ \hat{\varepsilon} \end{bmatrix} \longrightarrow \begin{bmatrix} \hat{\varepsilon} \\ \hat{q} \end{bmatrix} = \hat{\theta}_{\varepsilon q}$$

$$\begin{bmatrix} 2 & 1 \\ 1 & 1 \\ 1 & 0 \end{bmatrix} \begin{bmatrix} \log \hat{\varepsilon} \\ \log \hat{q} \end{bmatrix} = \begin{bmatrix} \log\left(\hat{q\varepsilon^2}\right) \\ \log\left(\hat{q\varepsilon}\right) \\ \log\left(\hat{\varepsilon}\right) \end{bmatrix}$$

$$A_{\varepsilon q} \log(\hat{\theta}_{\varepsilon q}) = \log(\hat{\theta}_{pde})$$

$$\log(\hat{\theta}_{\varepsilon q}) = A^{+}_{\varepsilon q} \log(\hat{\theta}_{pde})$$

Managing Overparameterization

$$\hat{\theta}_{pde} = \begin{bmatrix} \widehat{q\varepsilon^2} \\ \widehat{q\varepsilon} \\ \hat{\varepsilon} \end{bmatrix} \longrightarrow \begin{bmatrix} \hat{\varepsilon} \\ \hat{q} \end{bmatrix} = \hat{\theta}_{\varepsilon q}$$

$$\begin{bmatrix} 2 & 1 \\ 1 & 1 \\ 1 & 0 \end{bmatrix} \begin{bmatrix} \log \hat{\varepsilon} \\ \log \hat{q} \end{bmatrix} = \begin{bmatrix} \log\left(\hat{q\varepsilon^2}\right) \\ \log\left(\hat{q\varepsilon}\right) \\ \log\left(\hat{\varepsilon}\right) \end{bmatrix}$$

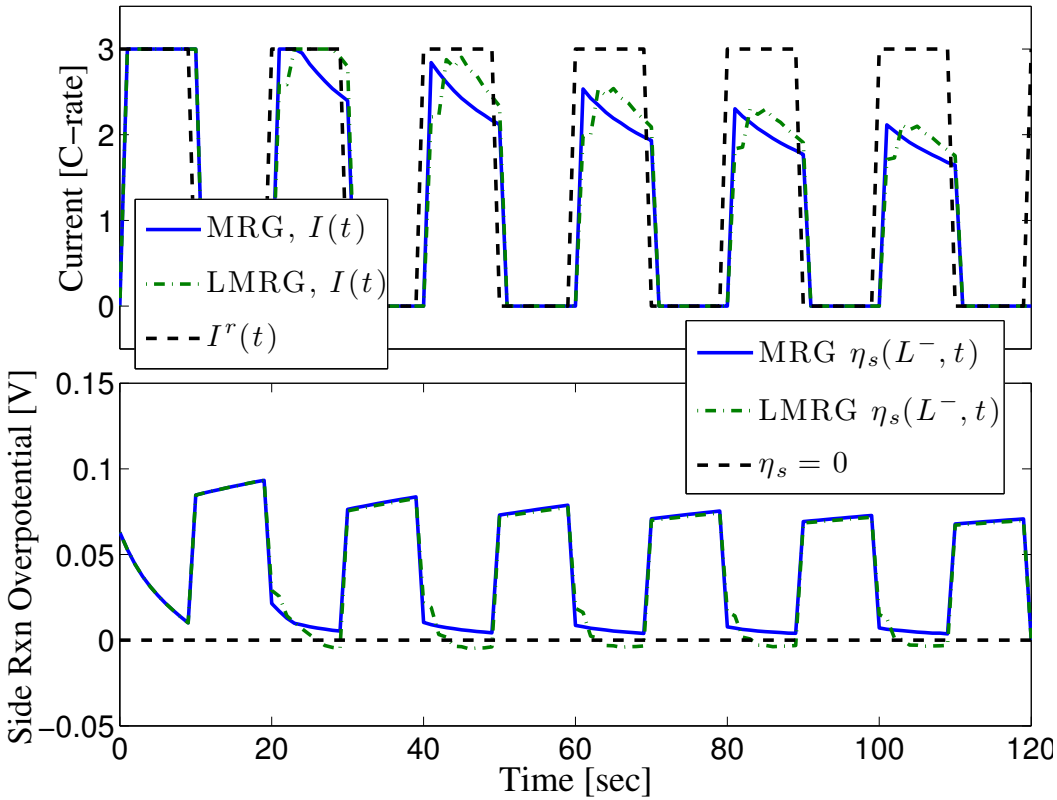
$$\begin{aligned} A_{\varepsilon q} \log(\hat{\theta}_{\varepsilon q}) &= \log(\hat{\theta}_{pde}) \\ \log(\hat{\theta}_{\varepsilon q}) &= A^{+}_{\varepsilon q} \log(\hat{\theta}_{pde}) \end{aligned}$$

Remark: $A^{+}_{\varepsilon q} = \left(A^{T}_{\varepsilon q} A_{\varepsilon q}\right)^{-1} A^{T}_{\varepsilon q}$ is the Moore-Penrose psuedoinverse of $A_{\varepsilon q}$

Linear Reference Governor

Modified Reference Governor (MRG) : Simulations

Linearized MRG (LMRG) : Explicit function evaluation



PHEV Power Management

Problem Statement

Design a supervisory control algorithm for plug-in hybrid electric vehicles (PHEVs) that splits engine and battery power in some optimal sense.



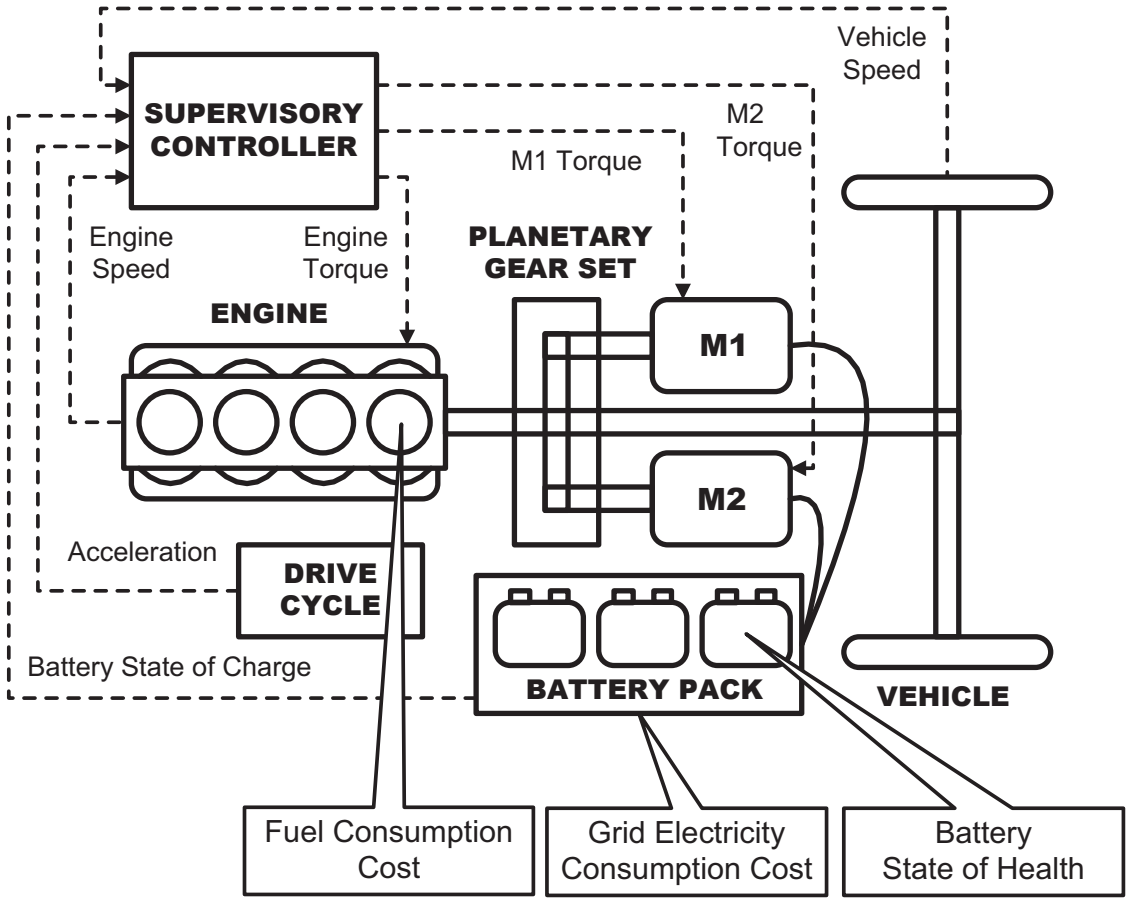
J. Voelcker, "Plugging Away in a Prius," *IEEE Spectrum*, vol. 45, pp. 30-48, 2008.



Power-Split PHEV Model

Ex: Toyota Prius, Ford Escape Hybrid

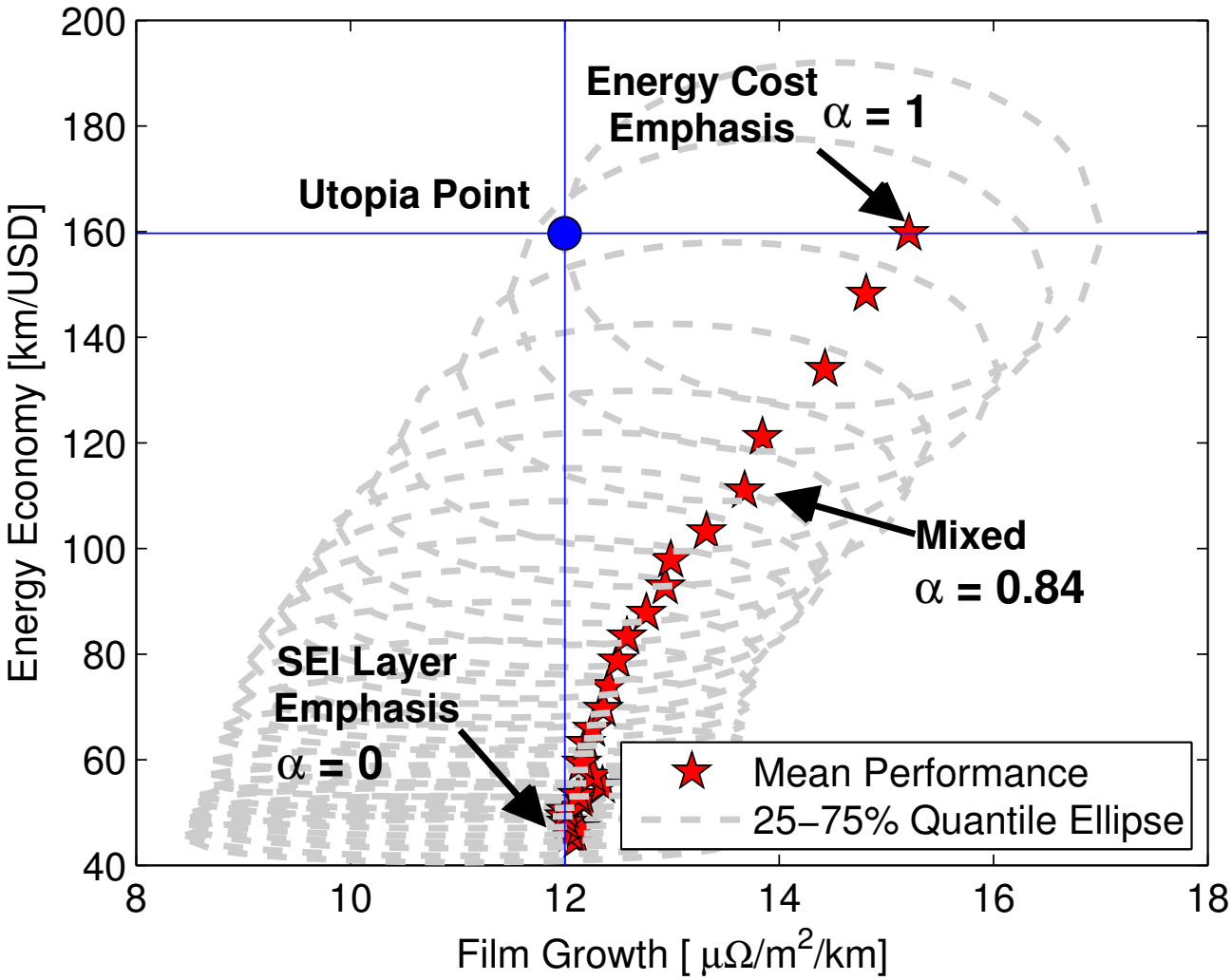
- Control Inputs
  - Engine Torque
  - M1 Torque
- State Variables
  - Engine speed
  - Vehicle speed
  - Battery SOC
  - Vehicle acceleration (Markov Chain)



Control Optimization: Minimize energy consumption cost AND battery aging

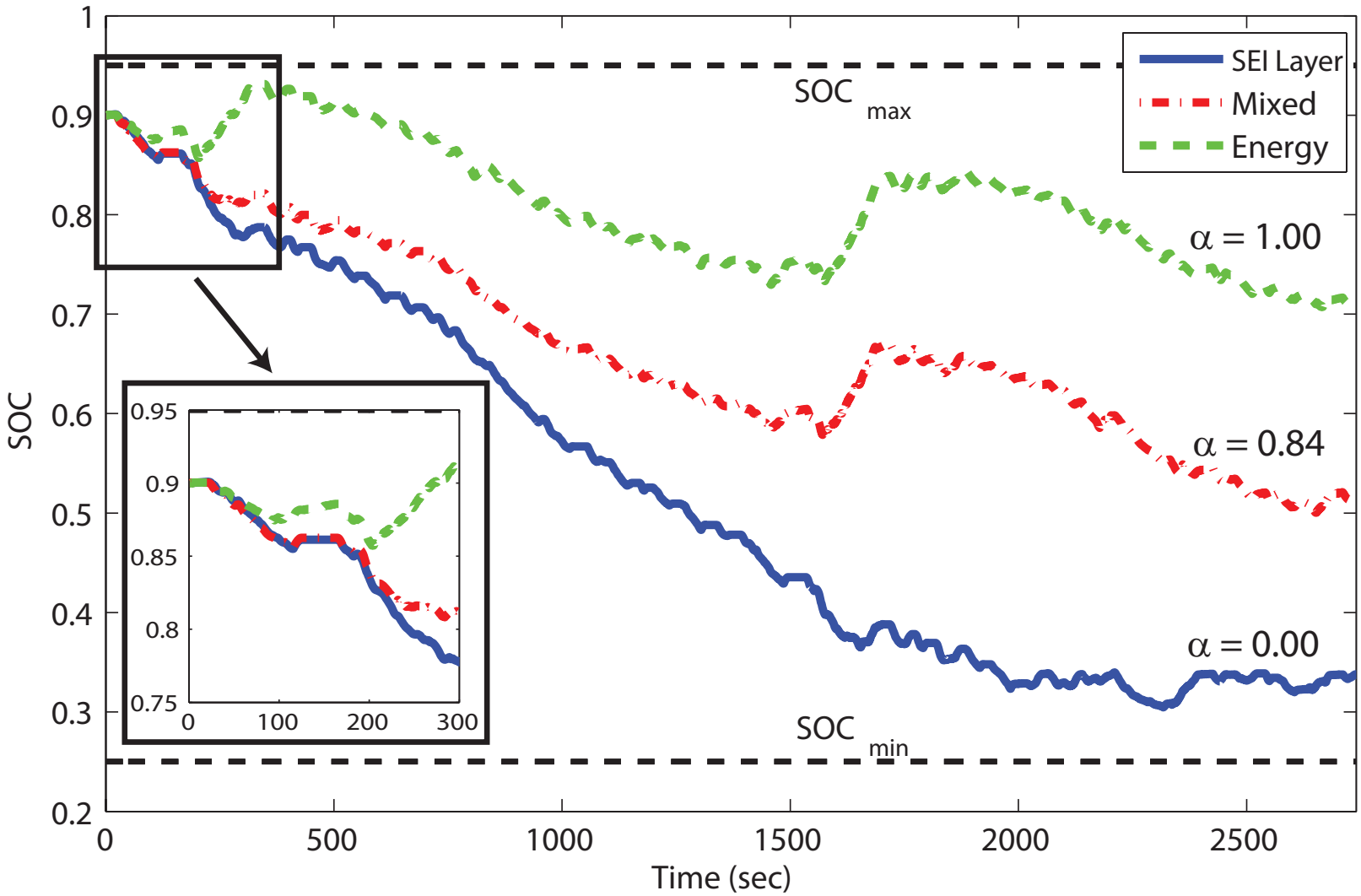
Pareto Set of Optimal Solutions

Anode-side SEI Layer Growth

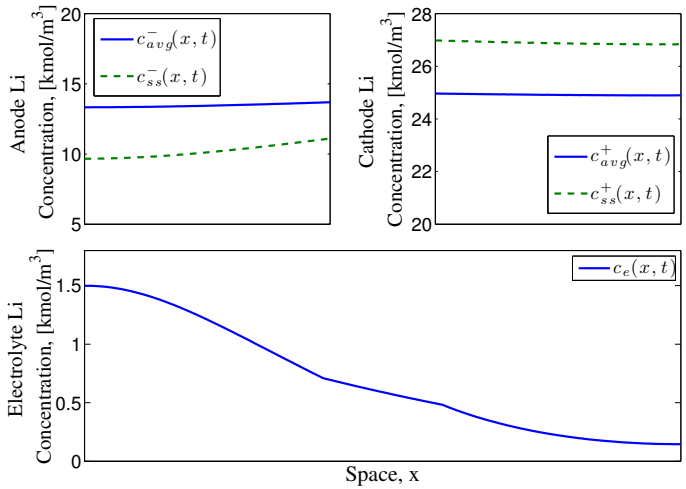


SOC Trajectories

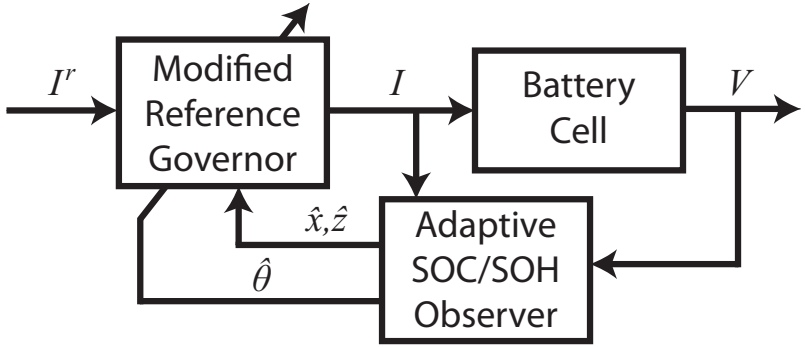
Anode-side SEI Layer Growth | UDDSx2



State Estimation w/ Electrolyte



Estimator + Reference Governor



Optimal charge/discharge

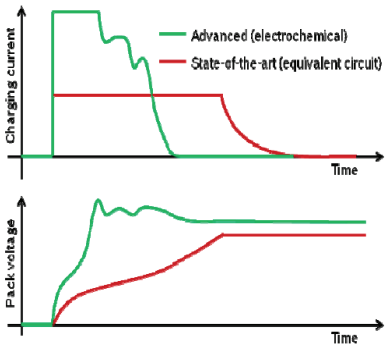


Figure 2: Charging phase of each duty cycle for BMS validation

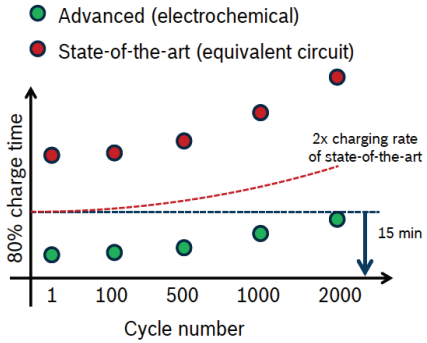
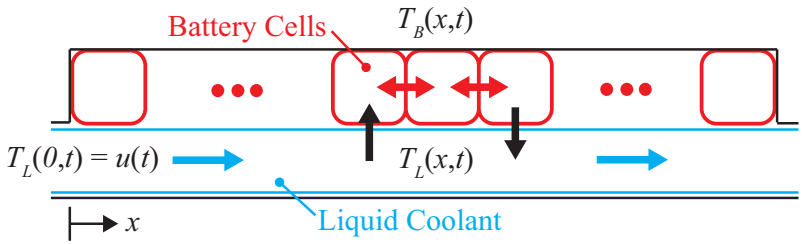


Figure 3: Comparison of charging time on a cycle to cycle basis for conventional BMS and advanced BMS

Thermal Management



Optimal Control of Distributed Parameter Systems

Models

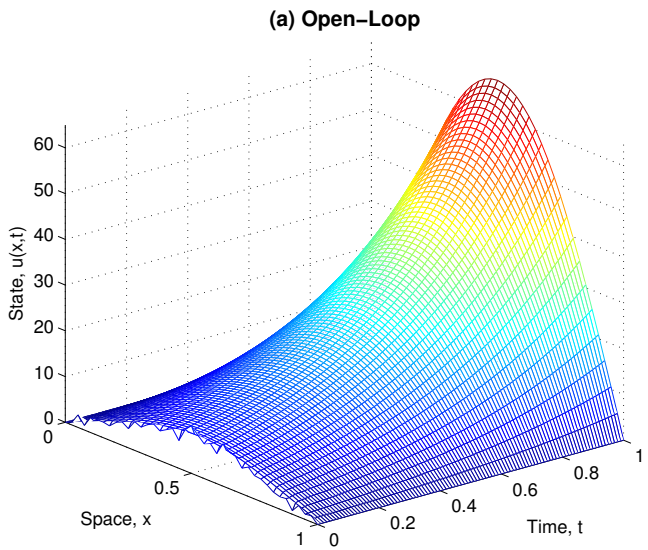
- Diffusion-Reaction-Advection
- Transport, Delays
- Waves, Beams, Nonlinear
- ...

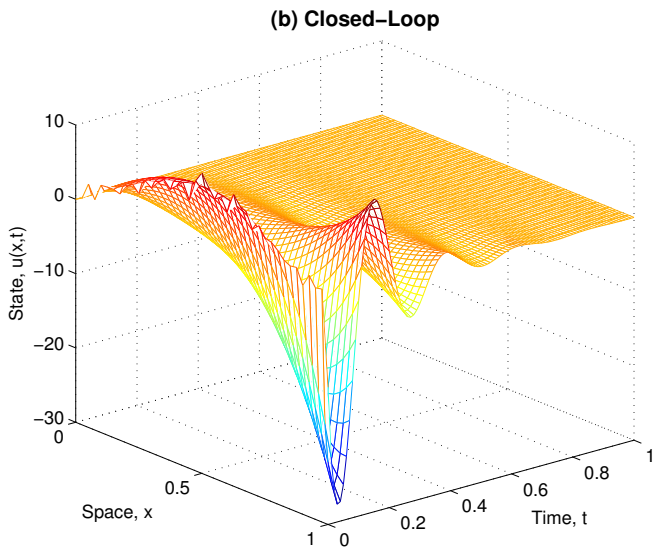
Apps

- Fluid Dynamics
- Contaminant transport
- Solar Forecasting
- Heat Transfer
- ...

Control Results

- LQR
- Reference tracking
- Estimation
- Acutator/Sensor placement
- ...





Demand Response of Aggregated Storage

Joint Work with Jan Bendsten, Aalborg University, Denmark

