Adaptive Estimation and Control of Models for Battery Electrochemistry

Scott Moura, Ph.D.

UC President's Postdoctoral Fellow
Cymer Center for Control Systems and Dynamics
UC San Diego

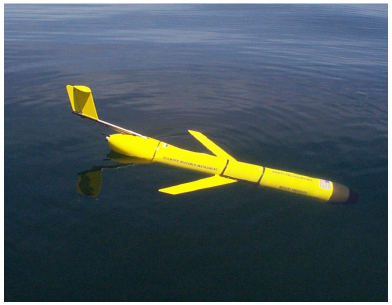
Systems and Control Seminar
UCLA
November 9, 2012



A Golden Era


IS-1
ST. JUDE MEDICAL
Sylmar, CA USA
ACCENT SR RF
PM1210 SSR
IS-1
ST. JUDE MEDICAL
Sylmar, CA USA
ANTHEM RF
PM3212 DDDRV





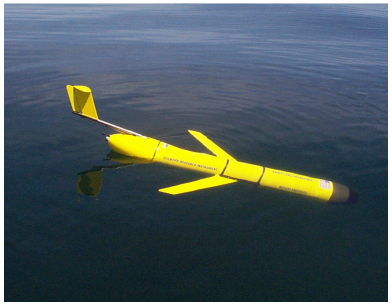




A Golden Era



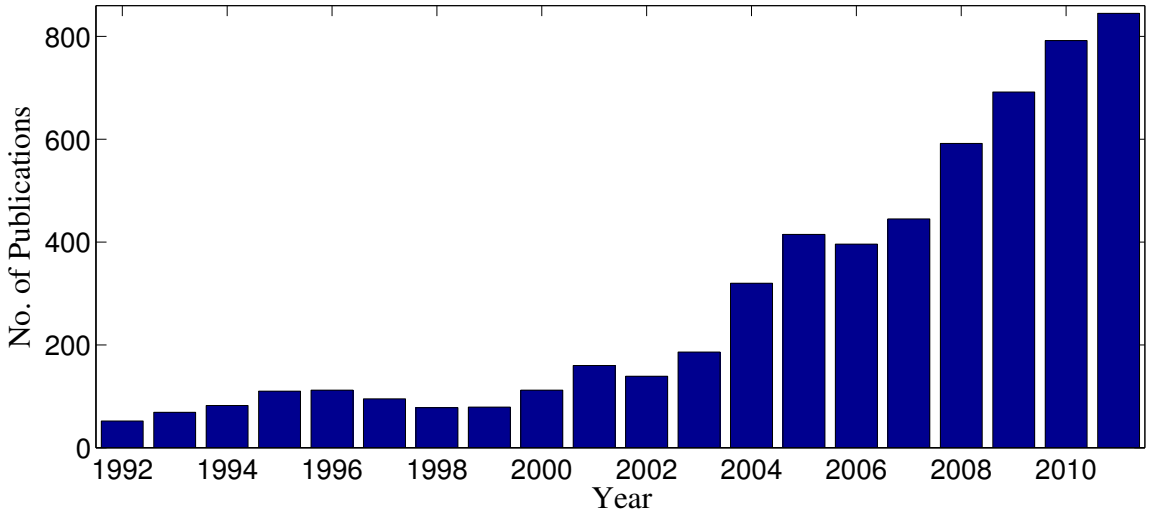








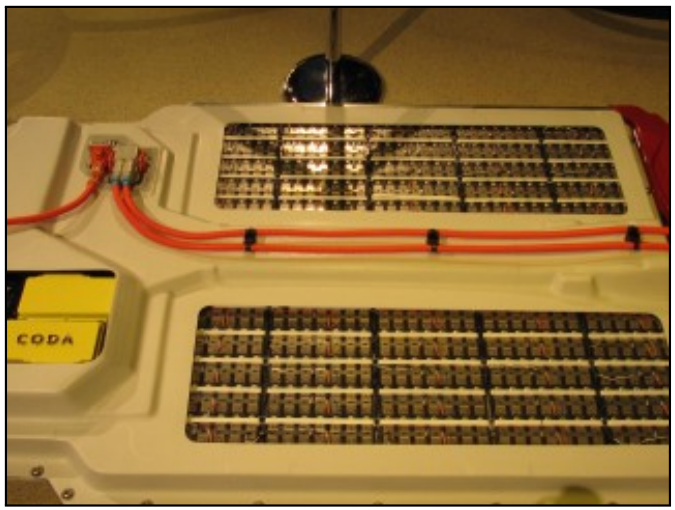
Keyword: “Battery Systems and Control”



Open Problems in Energy Storage and Control

Battery Management Systems

- Modeling & Identification
- SOC/SOH Estimation
- Constrained Control
- ...



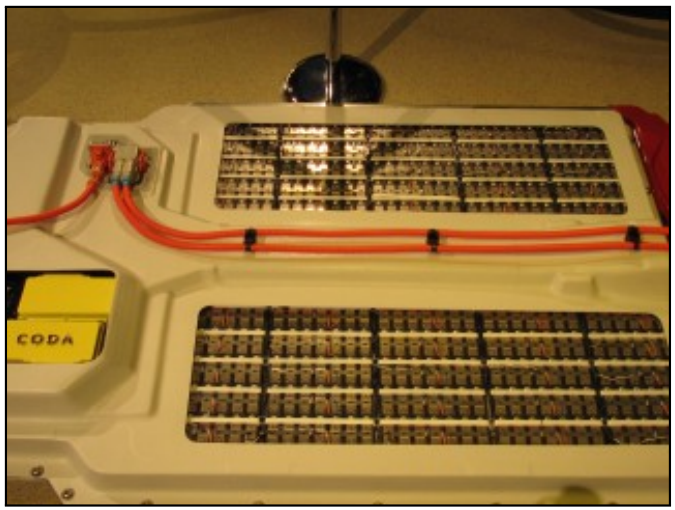
Open Problems in Energy Storage and Control

Battery Management Systems

- Modeling & Identification
- SOC/SOH Estimation
- Constrained Control
- ...

Energy Storage in Smart Grid

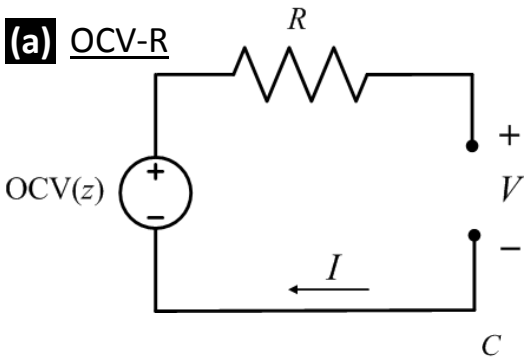
- Modeling & Design
- Hierarchical Control Framework
- Renewables
- ...





Battery Models

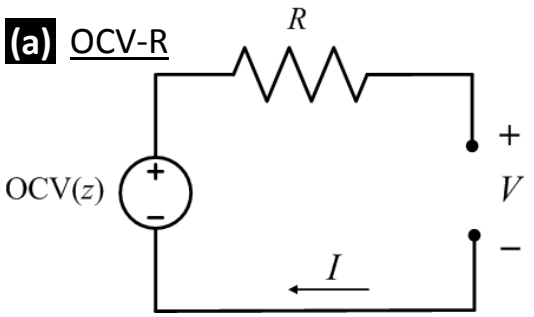
Equivalent Circuit Model



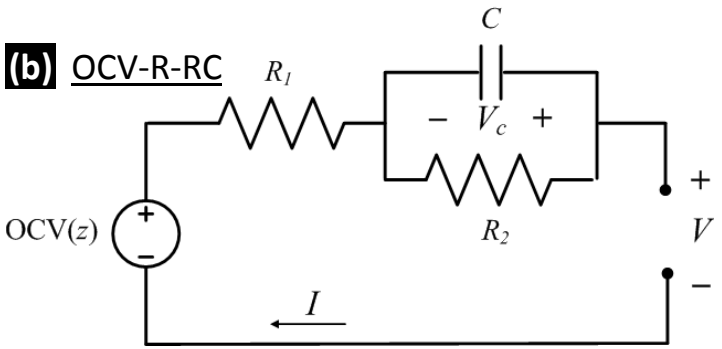
Battery Models

Equivalent Circuit Model

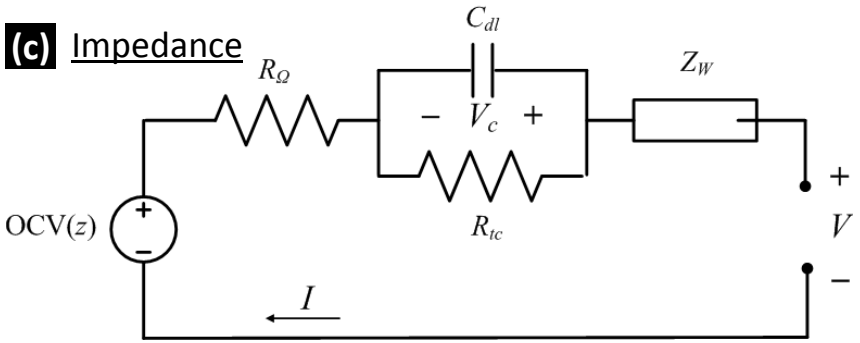
(a) OCV-R



(b) OCV-R-RC

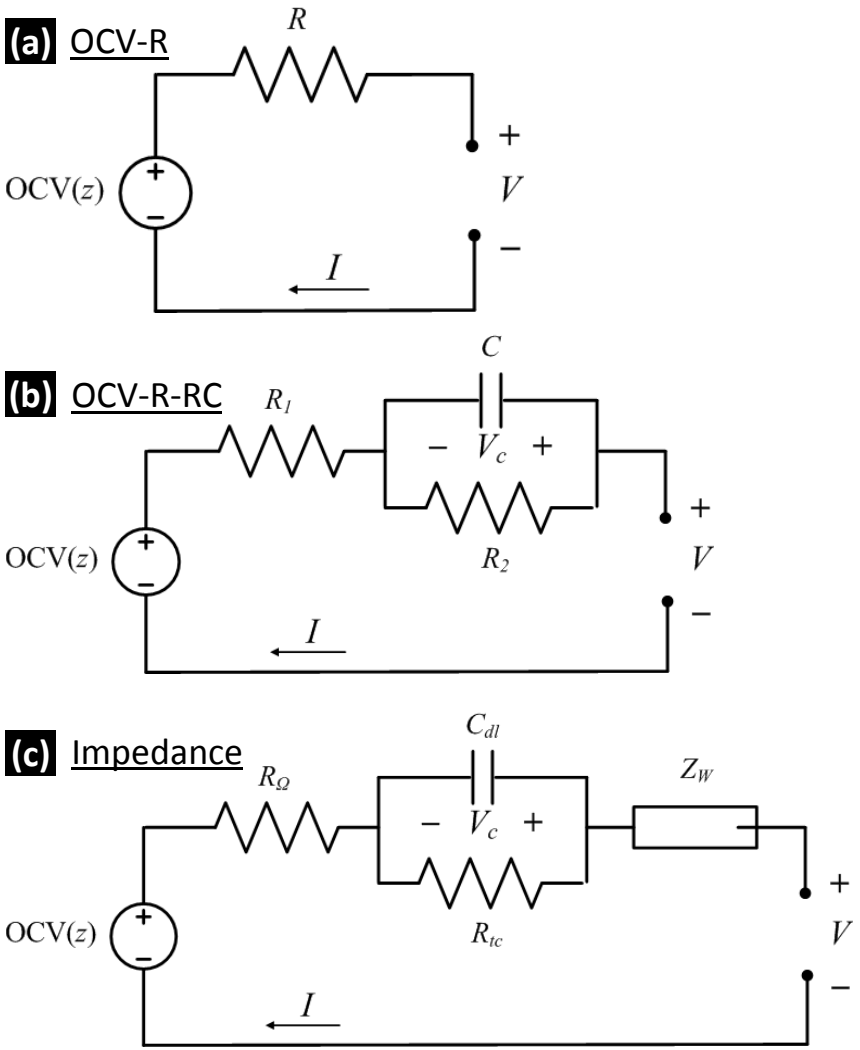


(c) Impedance

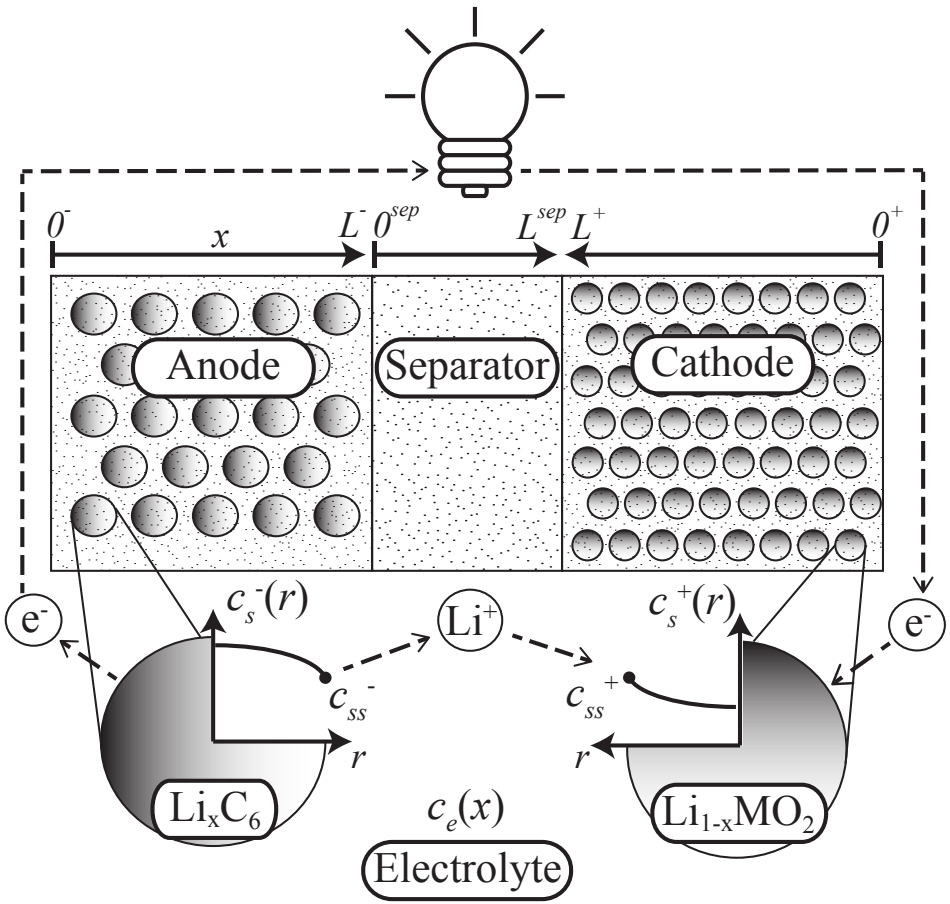


Battery Models

Equivalent Circuit Model

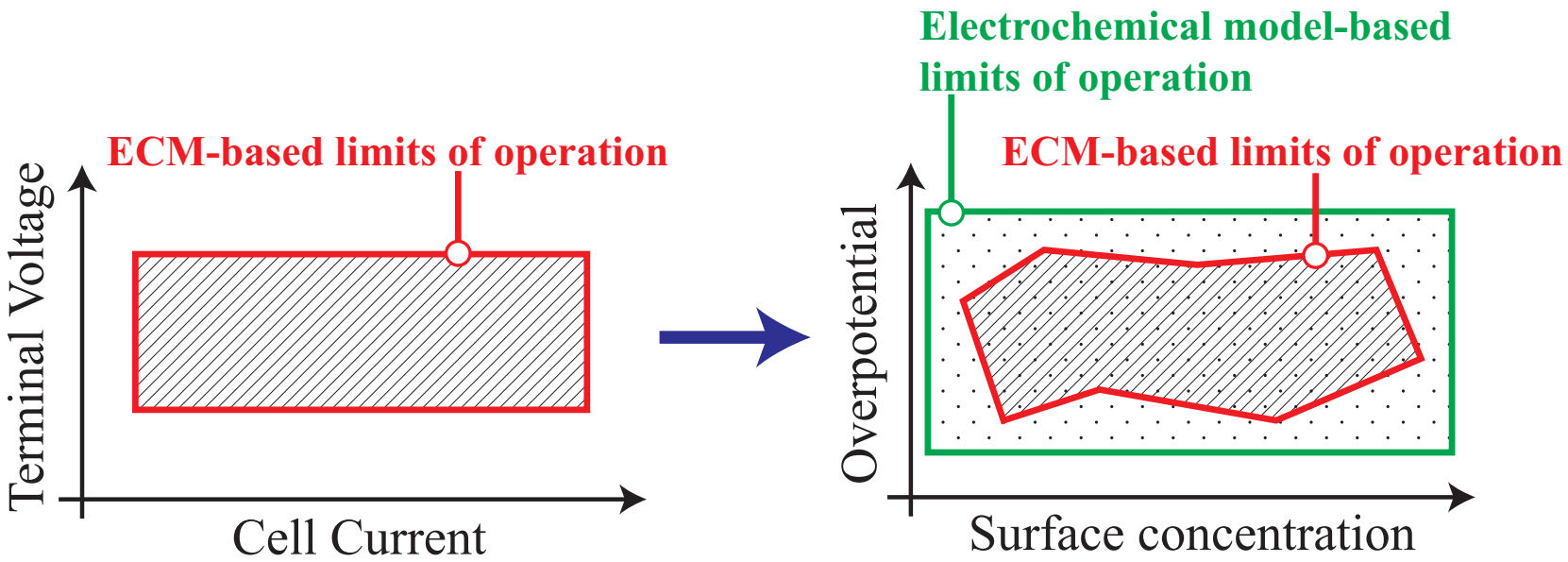


Electrochemical Model





Operate Batteries at their Physical Limits



Electrochemical Model Equations

well, some of them

Description	Equation
Solid phase Li concentration	$\frac{\partial c_s^{\pm}}{\partial t}(x,r,t) = \frac{1}{r^2}\frac{\partial}{\partial r}\left[D_s^{\pm} r^2 \frac{\partial c_s^{\pm}}{\partial r}(x,r,t)\right]$
Electrolyte Li concentration	$\varepsilon_e \frac{\partial c_e}{\partial t}(x,t) = \frac{\partial}{\partial x}\left[\varepsilon_e D_e \frac{\partial c_e}{\partial x}(x,t) + \frac{1-t_c^0}{F} i_e^{\pm}(x,t)\right]$
Solid potential	$\frac{\partial \phi_s^{\pm}}{\partial x}(x,t) = \frac{i_e^{\pm}(x,t) - I(t)}{\sigma^{\pm}}$
Electrolyte potential	$\frac{\partial \phi_e}{\partial x}(x,t) = -\frac{i_e^{\pm}(x,t)}{\kappa} + \frac{2RT}{F}(1-t_c^0)\left(1 + \frac{d\ln f_{c/a}}{d\ln c_e}(x,t)\right)\frac{\partial \ln c_e}{\partial x}(x,t)$
Electrolyte ionic current	$\frac{\partial i_e^{\pm}}{\partial x}(x,t) = a_s F j_n^{\pm}(x,t)$
Molar flux btw phases	$j_n^{\pm}(x,t) = \frac{1}{F} i_0^{\pm}(x,t)\left[e^{\frac{\alpha_a F}{RT}\eta^{\pm}(x,t)} - e^{-\frac{\alpha_c F}{RT}\eta^{\pm}(x,t)}\right]$
Temperature	$\rho c_P \frac{dT}{dt}(t) = h\left[T^0(t) - T(t)\right] + I(t)V(t) - \int_{0^-}^{0^+} a_s F j_n(x,t)\Delta T(x,t)dx$

Animation of Li Ion Evolution

Outline

1. [SOC/SOH Estimation] Looking Inside w/ Models, Meas., and Math
2. [Constrained Control] Operate at the Limits, Safely
3. Summary

Outline

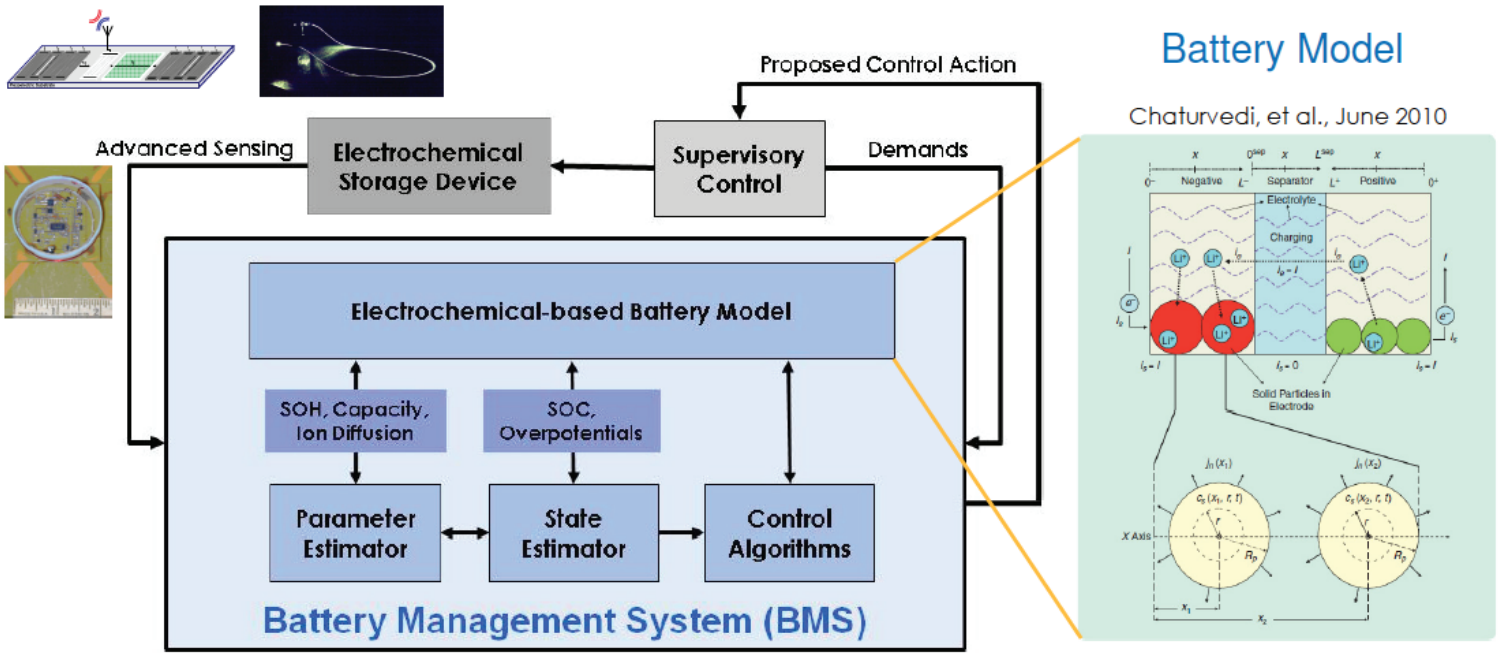
1. [SOC/SOH Estimation] Looking Inside w/ Models, Meas., and Math
2. [Constrained Control] Operate at the Limits, Safely
3. Summary

A Summarized History of SOC/SOH Estimation

- Equivalent Circuit Model
  - G. Plett (2004) - Extended Kalman Filter (States & Params)
  - RLS, Bias-correcting RLS, EKF on Impedance-based ECMs, LPV, Neural nets, Sliding-mode, Particle filters, and many more...

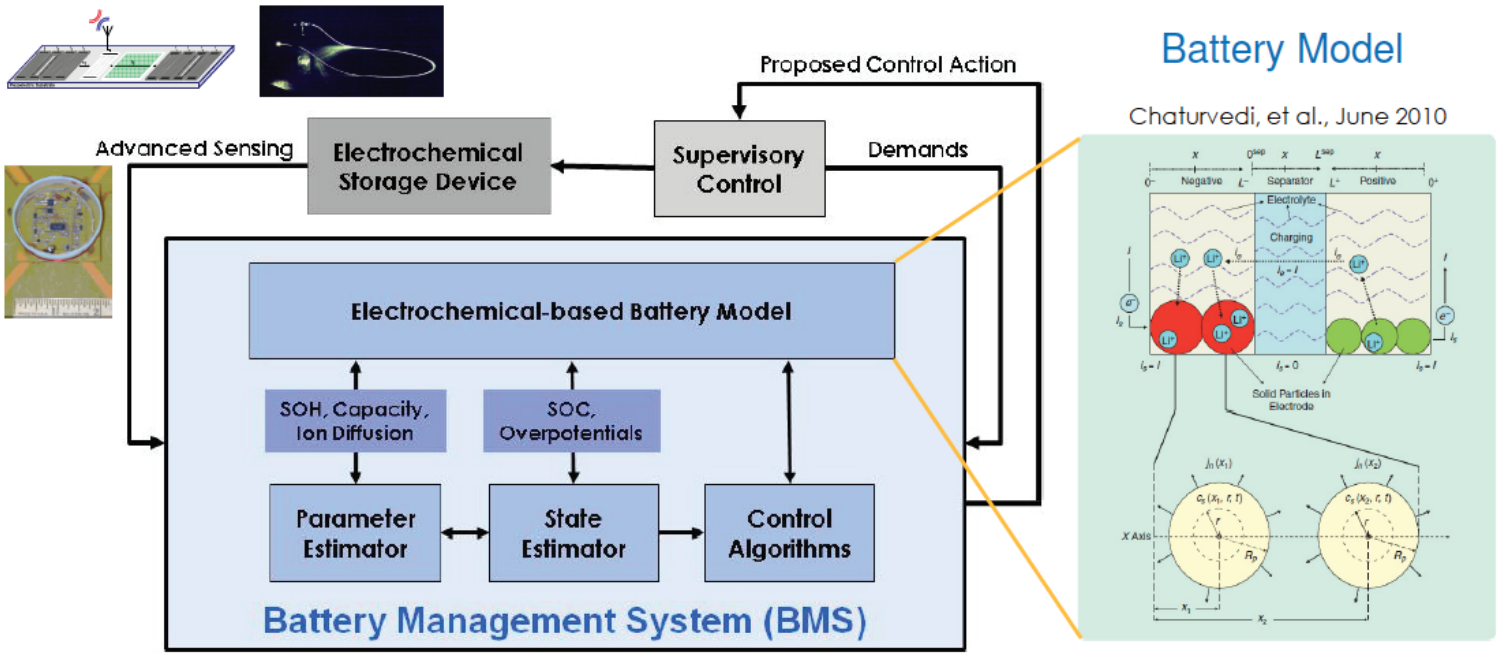
A Summarized History of SOC/SOH Estimation

- Equivalent Circuit Model
- Electrochemical Model



A Summarized History of SOC/SOH Estimation

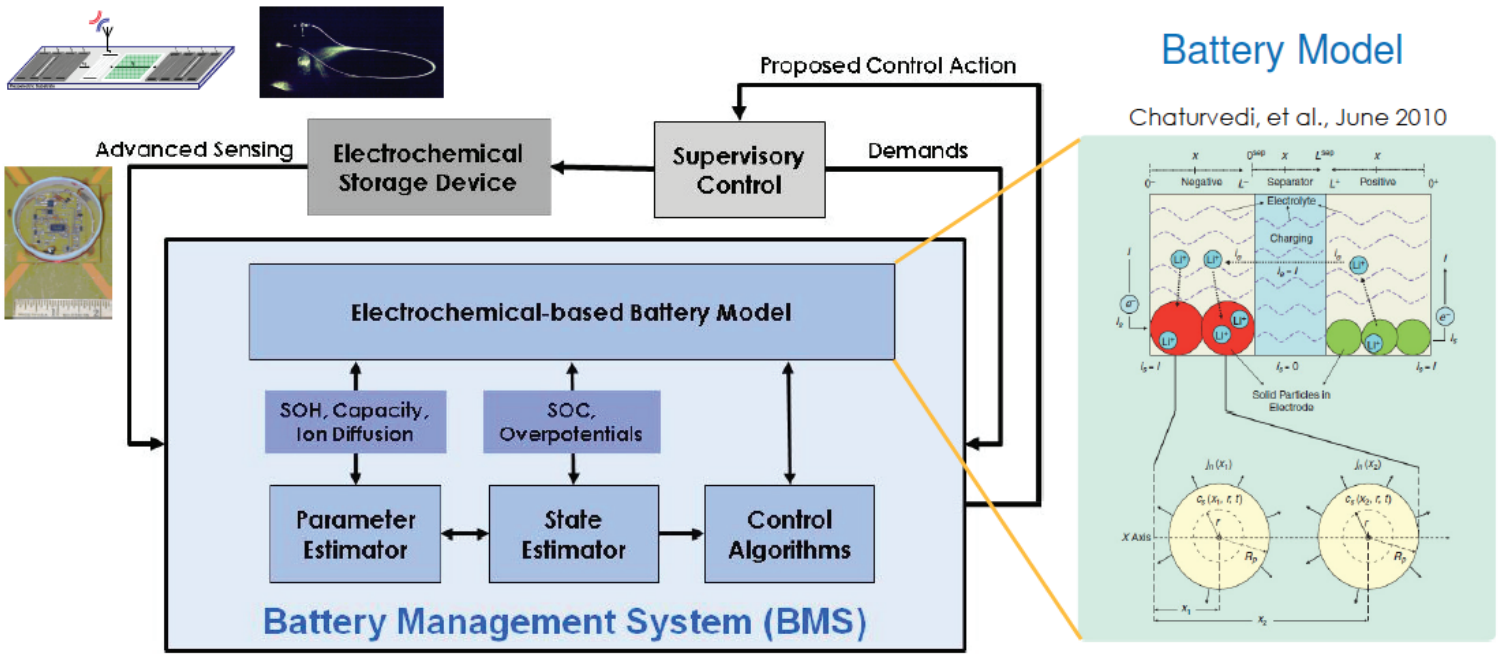
- Equivalent Circuit Model
- Electrochemical Model



- R. White (2006) - EKF on Single Particle Model (States)
- K. Smith (2008) - KF on Reduced Freq. Domain Model (States)
- A. Stefanopoulou (2010) - EKF on Electrode Avg Model (States)
- R. Klein (2012) - Luenburger Observer on reduced PDE Model (States)

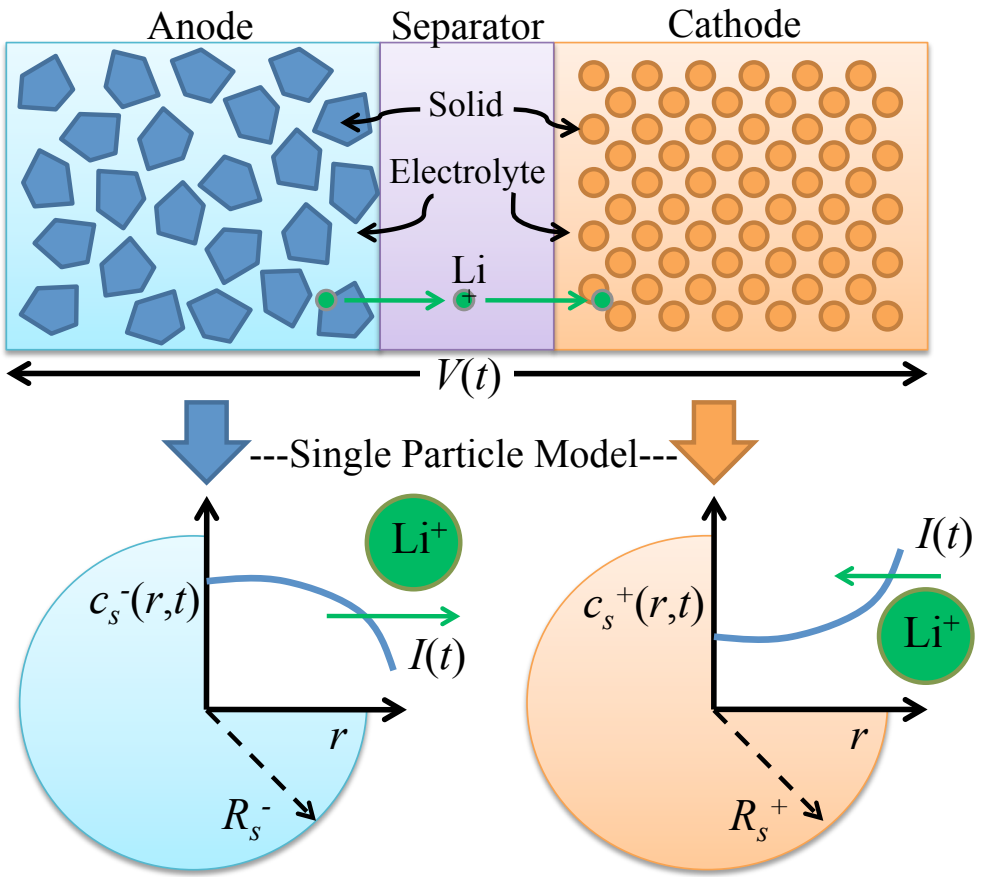
A Summarized History of SOC/SOH Estimation

- Equivalent Circuit Model
- Electrochemical Model



- R. White (2006) - EKF on Single Particle Model (States)
- K. Smith (2008) - KF on Reduced Freq. Domain Model (States)
- A. Stefanopoulou (2010) - EKF on Electrode Avg Model (States)
- R. Klein (2012) - Luenburger Observer on reduced PDE Model (States)
- S. Moura (2012) - Adaptive PDE Observer on SPM (States & Params)

Single Particle Model (SPM)

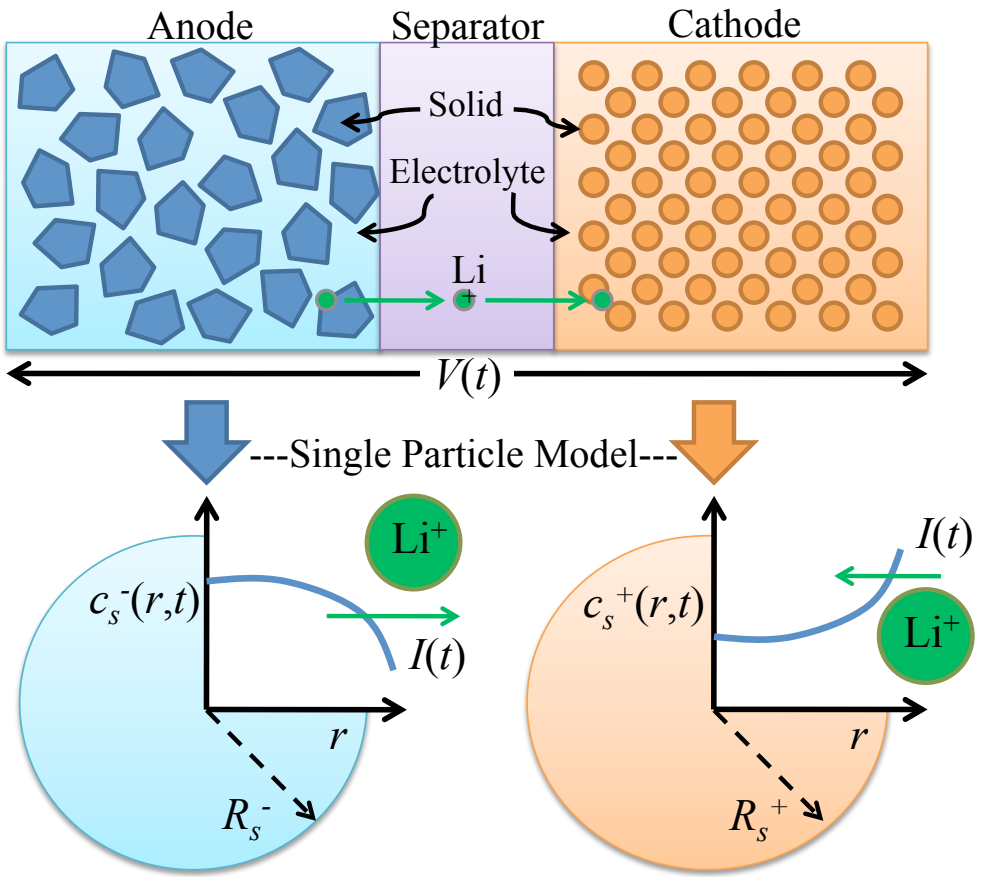


Single Particle Model (SPM)

Diffusion of Li in solid phase:

$$\frac{\partial c_s^-}{\partial t}(r,t) = \frac{D_s^-}{r^2}\frac{\partial}{\partial r}\left[r^2\frac{\partial^2 c_s^-}{\partial r^2}(r,t)\right]$$

$$\frac{\partial c_s^+}{\partial t}(r,t) = \frac{D_s^+}{r^2}\frac{\partial}{\partial r}\left[r^2\frac{\partial^2 c_s^+}{\partial r^2}(r,t)\right]$$



Single Particle Model (SPM)

Diffusion of Li in solid phase:

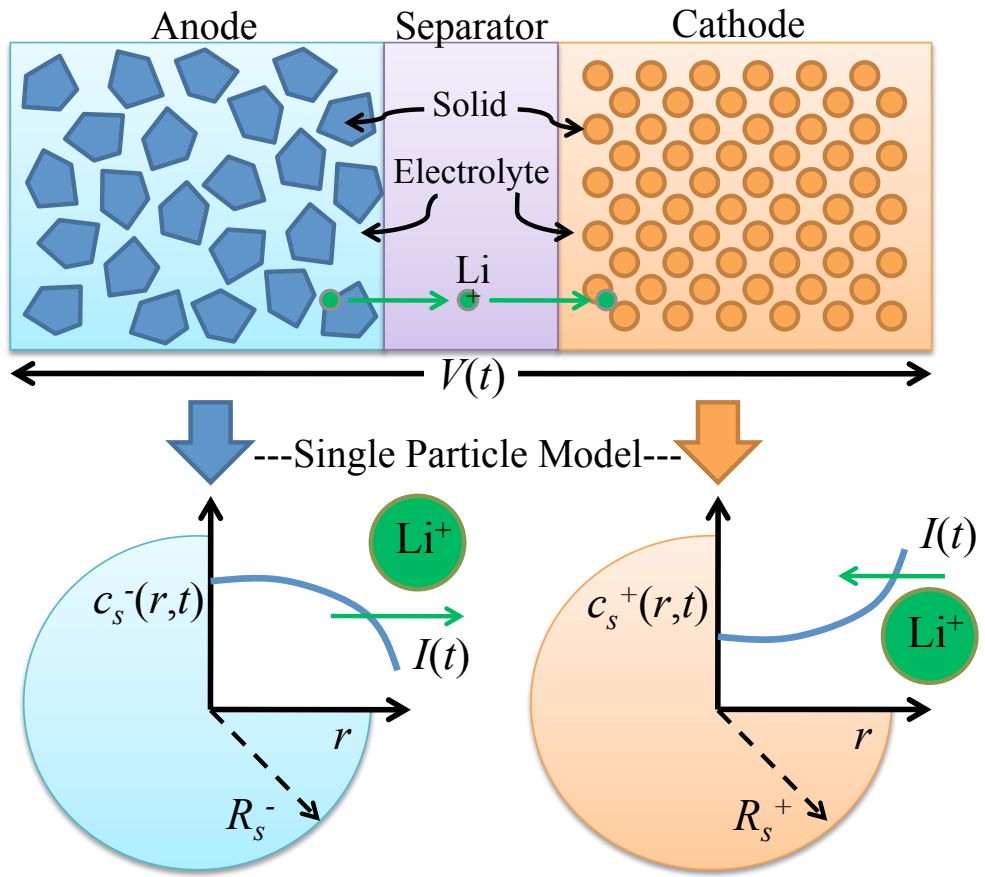
$$\frac{\partial c_s^-}{\partial t}(r,t) = \frac{D_s^-}{r^2}\frac{\partial}{\partial r}\left[r^2\frac{\partial^2 c_s^-}{\partial r^2}(r,t)\right]$$

$$\frac{\partial c_s^+}{\partial t}(r,t) = \frac{D_s^+}{r^2}\frac{\partial}{\partial r}\left[r^2\frac{\partial^2 c_s^+}{\partial r^2}(r,t)\right]$$

Boundary conditions:

$$\frac{\partial c_s^-}{\partial r}(R_s^-,t) = -\rho^+ I(t)$$

$$\frac{\partial c_s^+}{\partial r}(R_s^+,t) = \rho^- I(t)$$



Single Particle Model (SPM)

Diffusion of Li in solid phase:

$$\frac{\partial c_s^-}{\partial t}(r,t) = \frac{D_s^-}{r^2}\frac{\partial}{\partial r}\left[r^2\frac{\partial^2 c_s^-}{\partial r^2}(r,t)\right]$$

$$\frac{\partial c_s^+}{\partial t}(r,t) = \frac{D_s^+}{r^2}\frac{\partial}{\partial r}\left[r^2\frac{\partial^2 c_s^+}{\partial r^2}(r,t)\right]$$

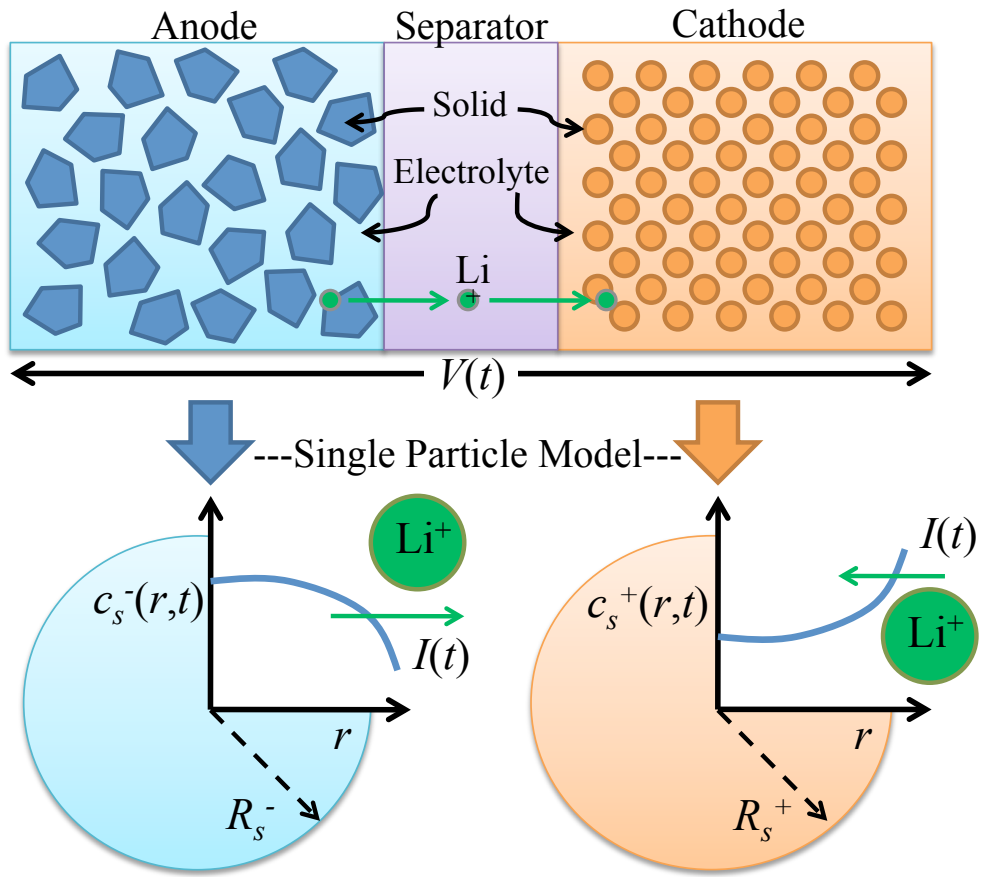
Boundary conditions:

$$\frac{\partial c_s^-}{\partial r}(R_s^-,t) = -\rho^+ I(t)$$

$$\frac{\partial c_s^+}{\partial r}(R_s^+,t) = \rho^- I(t)$$

Voltage Output Function:

$$V(t) = h(c_{ss}^-(t), c_{ss}^+(t), I(t); \theta)$$



Single Particle Model (SPM)

Diffusion of Li in solid phase:

$$\frac{\partial c_s^-}{\partial t}(r,t) = \frac{D_s^-}{r^2}\frac{\partial}{\partial r}\left[r^2\frac{\partial^2 c_s^-}{\partial r^2}(r,t)\right]$$

$$\frac{\partial c_s^+}{\partial t}(r,t) = \frac{D_s^+}{r^2}\frac{\partial}{\partial r}\left[r^2\frac{\partial^2 c_s^+}{\partial r^2}(r,t)\right]$$

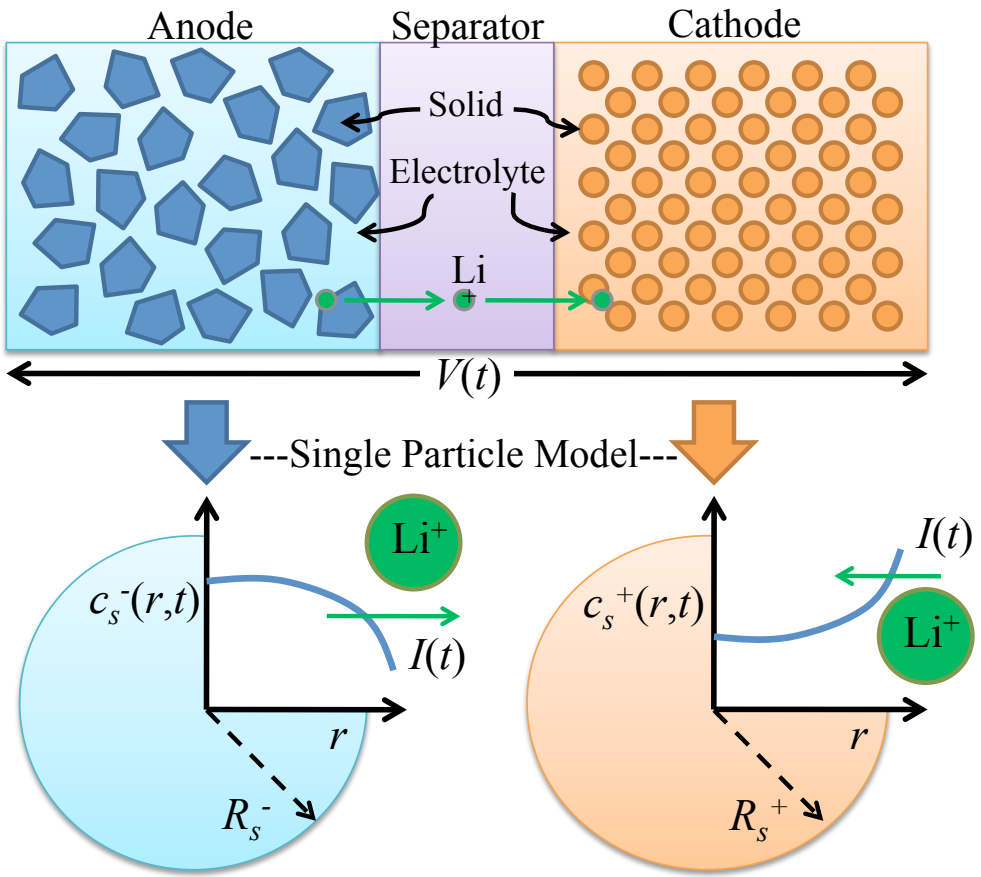
Boundary conditions:

$$\frac{\partial c_s^-}{\partial r}(R_s^-,t) = -\rho^+ I(t)$$

$$\frac{\partial c_s^+}{\partial r}(R_s^+,t) = \rho^- I(t)$$

Voltage Output Function:

$$V(t) = h(c_{ss}^-(t), c_{ss}^+(t), I(t); \theta)$$

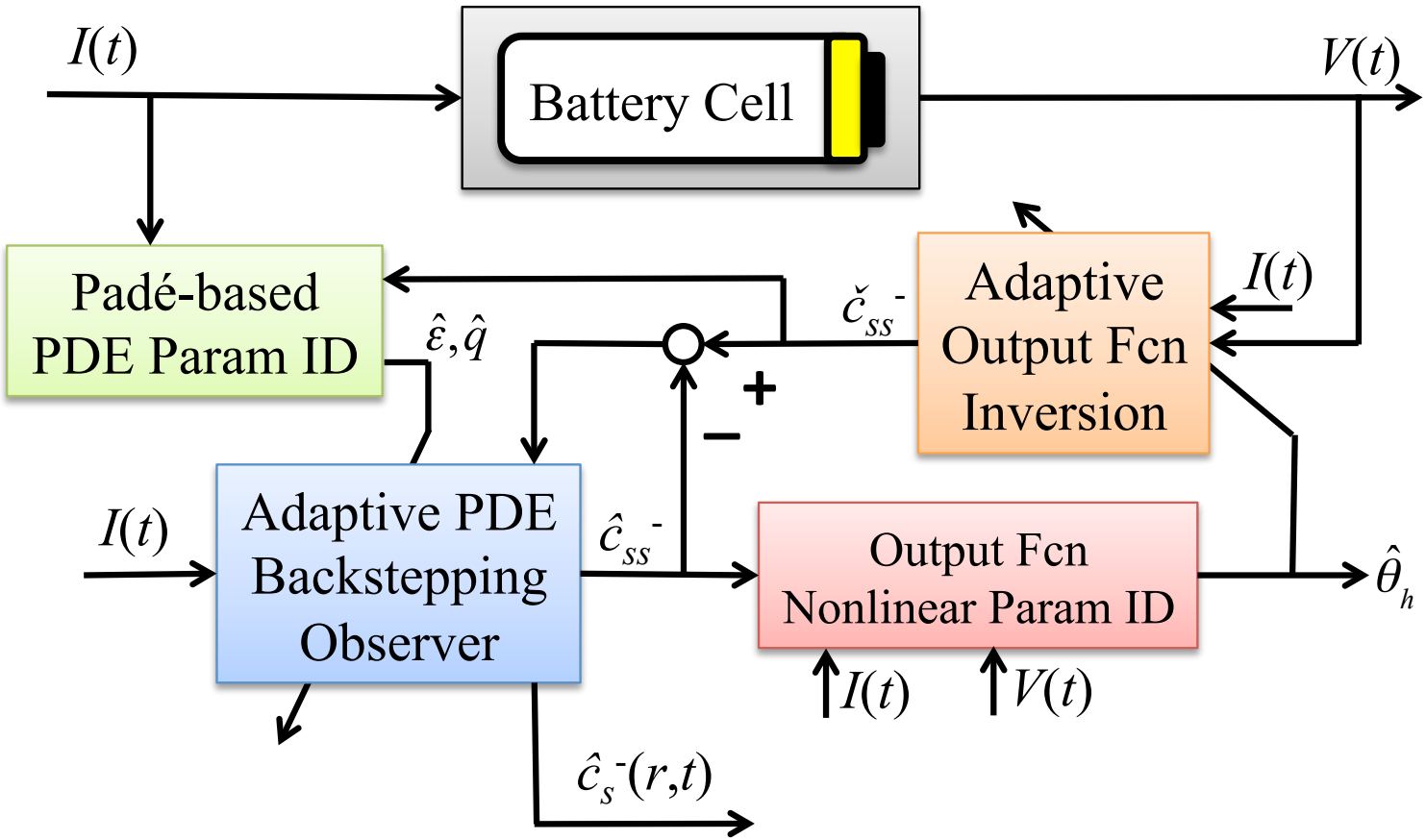


Definitions

- SOC: Bulk concentration SOC_{bulk}, Surface concentration $c_{ss}^-(t)$
- SOH: Physical parameters, e.g. ε, q, n_{Li}, R_f

Adaptive Observer

Combined State & Parameter Estimation



The SOC Estimation Problem

Problem Statement

Estimate states $c_s^-(r,t), c_s^+(r,t)$ from measurements $I(t), V(t)$ and SPM

The SOC Estimation Problem

Problem Statement

Estimate states $c_s^-(r,t), c_s^+(r,t)$ from measurements $I(t), V(t)$ and SPM

Simplify the Math

- Model reduction to achieve observability
- Normalize time and space
- State transformation

The SOC Estimation Problem

Problem Statement

Estimate states $c_s^-(r,t), c_s^+(r,t)$ from measurements $I(t), V(t)$ and SPM

Simplify the Math

- Model reduction to achieve observability
- Normalize time and space
- State transformation

Observer Model Equations

$$\frac{\partial c}{\partial t}(r,t) = \varepsilon \frac{\partial^2 c}{\partial r^2}(r,t) \qquad \text{Heat PDE}$$

$$c(0,t) = 0$$

$$\frac{\partial c}{\partial r}(1,t) - c(1,t) = -q\rho I(t)$$

$$\text{Measurement} = c(1,t) = \check{c}_{ss}^-(t)$$

Backstepping PDE Estimator

Estimator

$$
\begin{aligned}
\frac{\partial \hat{c}}{\partial t}(r,t) &= \varepsilon \frac{\partial^2 \hat{c}}{\partial r^2}(r,t) + p_1(r)\left[c(1,t) - \hat{c}(1,t)\right] \\
\hat{c}(0,t) &= 0 \\
\frac{\partial \hat{c}}{\partial r}(1,t) - \hat{c}(1,t) &= -q\rho I(t) + p_{10}\left[c(1,t) - \hat{c}(1,t)\right] \\
\tilde{c}(1,t) &= c(1,t) - \hat{c}(1,t)
\end{aligned}
$$

Backstepping PDE Estimator

Estimator

$$\begin{aligned}
\frac{\partial \hat{c}}{\partial t}(r,t) &= \varepsilon \frac{\partial^2 \hat{c}}{\partial r^2}(r,t) + p_1(r)\left[c(1,t) - \hat{c}(1,t)\right] \\
\hat{c}(0,t) &= 0 \\
\frac{\partial \hat{c}}{\partial r}(1,t) - \hat{c}(1,t) &= -q\rho I(t) + p_{10}\left[c(1,t) - \hat{c}(1,t)\right] \\
\tilde{c}(1,t) &= c(1,t) - \hat{c}(1,t)
\end{aligned}$$

Estimation Error Dynamics: $\tilde{c}(r,t) = c(r,t) - \hat{c}(r,t)$

$$\begin{aligned}
\frac{\partial \tilde{c}}{\partial t}(r,t) &= \varepsilon \frac{\partial^2 \tilde{c}}{\partial r^2}(r,t) - p_1(r)\tilde{c}(1,t) \\
\tilde{c}(0,t) &= 0 \\
\frac{\partial \tilde{c}}{\partial r}(1,t) - \tilde{c}(1,t) &= -p_{10}\tilde{c}(1,t)
\end{aligned}$$

Backstepping PDE Estimator

Estimator

$$\begin{aligned}
\frac{\partial \hat{c}}{\partial t}(r,t) &= \varepsilon \frac{\partial^2 \hat{c}}{\partial r^2}(r,t) + p_1(r)\left[c(1,t) - \hat{c}(1,t)\right] \\
\hat{c}(0,t) &= 0 \\
\frac{\partial \hat{c}}{\partial r}(1,t) - \hat{c}(1,t) &= -q\rho I(t) + p_{10}\left[c(1,t) - \hat{c}(1,t)\right] \\
\tilde{c}(1,t) &= c(1,t) - \hat{c}(1,t)
\end{aligned}$$

The Concept

$$\tilde{c}(r,t) = \tilde{w}(r,t) - \int_r^1 p(r,s)\tilde{w}(s)ds$$ Backstepping Transformation

$$\frac{\partial \tilde{w}}{\partial t}(r,t) = \varepsilon \frac{\partial^2 \tilde{w}}{\partial r^2}(r,t) + \lambda \tilde{w}(r,t)$$

$$\tilde{w}(0,t) = 0$$

Exp. Stable Target System

$$\frac{\partial \tilde{w}}{\partial r}(1,t) = \frac{1}{2}\tilde{w}(1,t)$$

$$W = \frac{1}{2}\int_0^1 \tilde{w}^2(x,t)dx$$

Backstepping PDE Estimator

Estimator

$$\begin{aligned}
\frac{\partial \hat{c}}{\partial t}(r,t) &= \varepsilon \frac{\partial^2 \hat{c}}{\partial r^2}(r,t) + p_1(r)\left[c(1,t) - \hat{c}(1,t)\right] \\
\hat{c}(0,t) &= 0 \\
\frac{\partial \hat{c}}{\partial r}(1,t) - \hat{c}(1,t) &= -q\rho I(t) + p_{10}\left[c(1,t) - \hat{c}(1,t)\right] \\
\tilde{c}(1,t) &= c(1,t) - \hat{c}(1,t)
\end{aligned}$$

Kernel PDE

$$p(r,s) : \mathcal{D} \to \mathbb{R}, \qquad \mathcal{D} = \{(r,s) | 0 \le r \le s \le 1\}$$

$$p_{rr}(r,s) - p_{ss}(r,s) = \frac{\lambda}{\varepsilon} p(r,s) \qquad p_1(r) = -p_s(r,1) - \frac{1}{2} p(r,1)$$

$$p(0,s) = 0 \qquad p_{10} = \frac{3 - \lambda/\varepsilon}{2}$$

$$p(r,r) = \frac{\lambda}{2\varepsilon} r$$

Backstepping PDE Estimator

Estimator

$$\begin{aligned}
\frac{\partial \hat{c}}{\partial t}(r,t) &= \varepsilon \frac{\partial^2 \hat{c}}{\partial r^2}(r,t) + p_1(r)\left[c(1,t) - \hat{c}(1,t)\right] \\
\hat{c}(0,t) &= 0 \\
\frac{\partial \hat{c}}{\partial r}(1,t) - \hat{c}(1,t) &= -q\rho I(t) + p_{10}\left[c(1,t) - \hat{c}(1,t)\right] \\
\tilde{c}(1,t) &= c(1,t) - \hat{c}(1,t)
\end{aligned}$$

Explicit Solution to Estimator Gains

$$p_1(r) = \frac{-\lambda r}{2\varepsilon z}\left[I_1(z) - \frac{2\lambda}{\varepsilon z} I_2(z)\right] \qquad \text{where} \quad z = \sqrt{\frac{\lambda}{\varepsilon}(r^2 - 1)}$$

$$p_{10} = \frac{1}{2}\left(3 - \frac{\lambda}{\varepsilon}\right)$$

The SOH Estimation Problem

Problem Statement

Estimate physical parameters from measurements $I(t), V(t)$ and SPM

The SOH Estimation Problem

Problem Statement

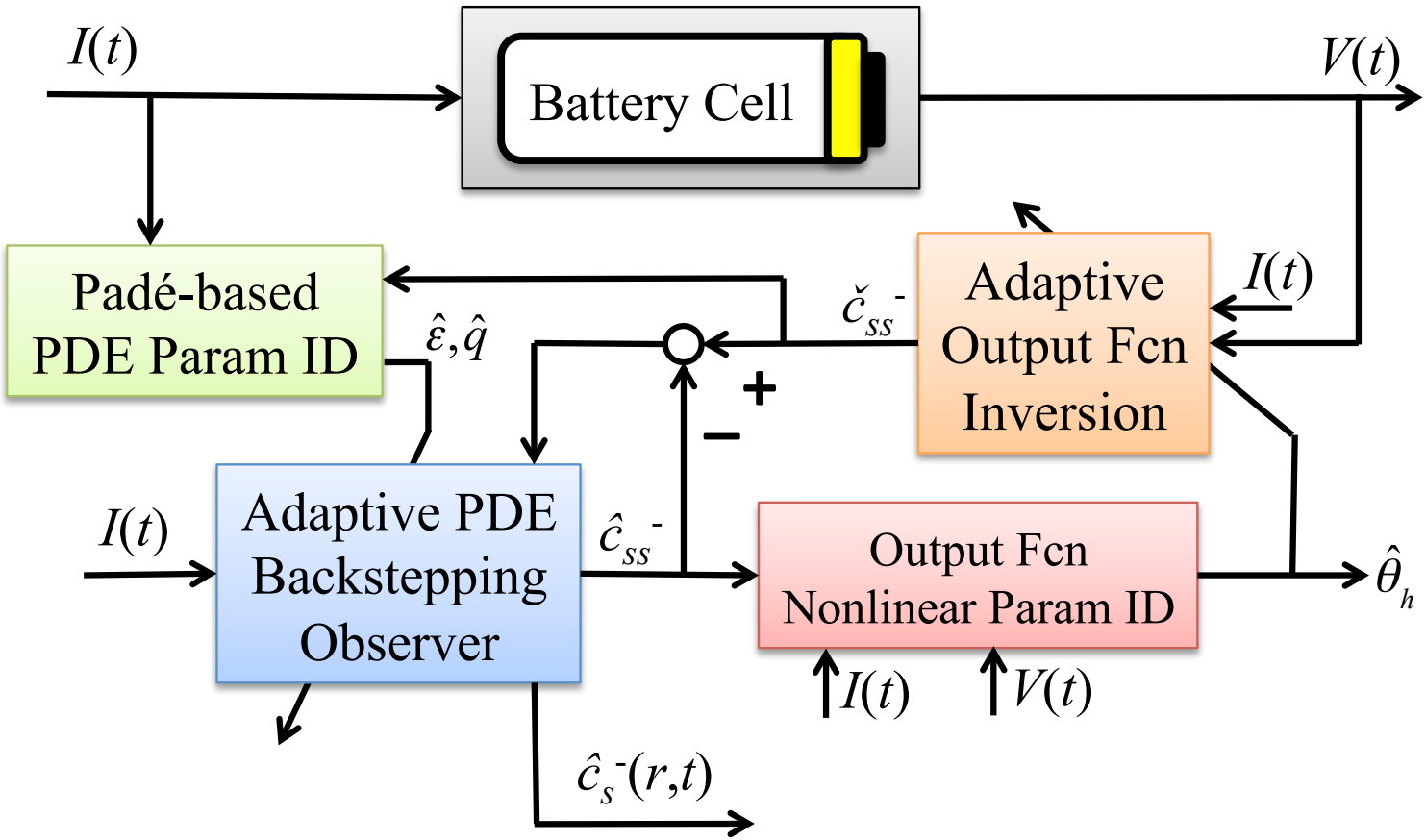
Estimate physical parameters from measurements $I(t), V(t)$ and SPM

Relate uncertain parameters to SOH-related concepts

- Capacity fade
- Power fade

Adaptive Observer

Combined State & Parameter Estimation



Padé-based PDE Parameter Identification

PDE Model

$$\frac{\partial c}{\partial t}(r,t) = \varepsilon \frac{\partial^2 c}{\partial r^2}(r,t)$$

$$c(0,t) = 0$$

$$\frac{\partial c}{\partial r}(1,t) - c(1,t) = -q\rho I(t)$$

Padé-based PDE Parameter Identification

PDE Model

$$\frac{\partial c}{\partial t}(r,t) = \varepsilon \frac{\partial^2 c}{\partial r^2}(r,t)$$
$$c(0,t) = 0$$
$$\frac{\partial c}{\partial r}(1,t) - c(1,t) = -q\rho I(t)$$

Main Idea: Padé approx. of TF

$$\frac{c_{ss}(s)}{I(s)} = \frac{-q\rho \sinh\left(\sqrt{\frac{s}{\varepsilon}}\right)}{\left(\sqrt{\frac{s}{\varepsilon}}\right)\cosh\left(\sqrt{\frac{s}{\varepsilon}}\right) - \sinh\left(\sqrt{\frac{s}{\varepsilon}}\right)} \approx \frac{-3\rho q\varepsilon^2 - \frac{2}{7}\rho q\varepsilon s}{\varepsilon s + \frac{1}{35}s^2}$$

Padé-based PDE Parameter Identification

PDE Model

$$\frac{\partial c}{\partial t}(r,t) = \varepsilon \frac{\partial^2 c}{\partial r^2}(r,t)$$
$$c(0,t) = 0$$
$$\frac{\partial c}{\partial r}(1,t) - c(1,t) = -q\rho I(t)$$

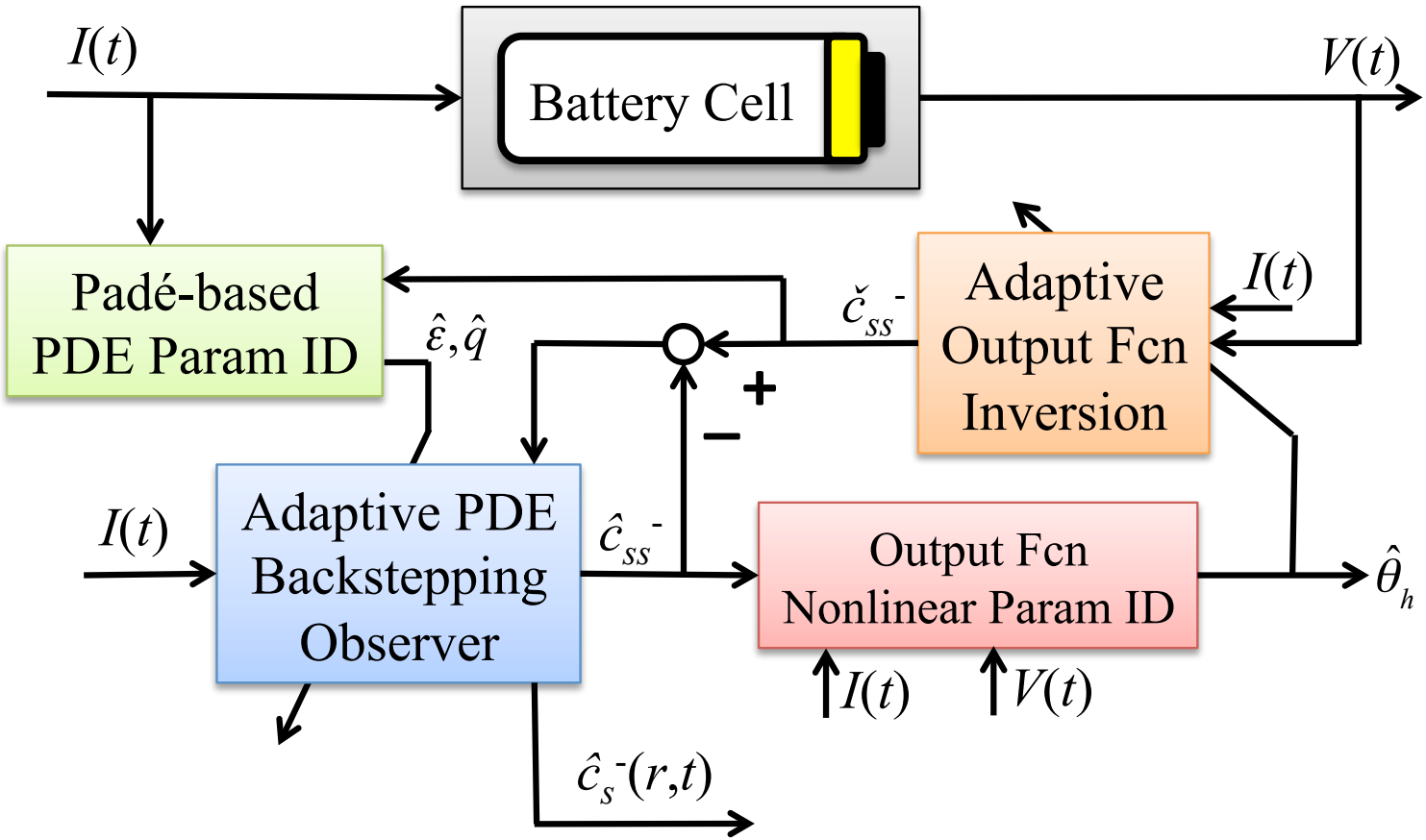
Main Idea: Padé approx. of TF

$$\frac{c_{ss}(s)}{I(s)} = \frac{-q\rho \sinh\left(\sqrt{\frac{s}{\varepsilon}}\right)}{\left(\sqrt{\frac{s}{\varepsilon}}\right)\cosh\left(\sqrt{\frac{s}{\varepsilon}}\right) - \sinh\left(\sqrt{\frac{s}{\varepsilon}}\right)} \approx \frac{-3\rho q\varepsilon^2 - \frac{2}{7}\rho q\varepsilon s}{\varepsilon s + \frac{1}{35}s^2}$$

Apply recursive least squares to $\theta_{pde} = [\varepsilon, q\varepsilon, q\varepsilon^2]^T$

Adaptive Observer

Combined State & Parameter Estimation



Output Function Nonlinear Parameter ID

Nonlinearly Parameterized Output

$$V(t) = h(c_{ss}^{-}(t), I(t); \theta)$$

- θ contains many parameters
- Linear dependence b/w parameters?

Output Function Nonlinear Parameter ID

Nonlinearly Parameterized Output

$$V(t) = h(c_{ss}^{-}(t), I(t); \theta)$$

- θ contains many parameters
- Linear dependence b/w parameters?

Identifiability Analysis

- Linearly independent parameter subset : $\theta_h = [n_{Li}, R_f]^T$
  - n_{Li} : Moles of cyclable Li (Capacity Fade)
  - R_f : Resistance of current collectors, electrolyte, etc. (Power Fade)

Output Function Nonlinear Parameter ID

Nonlinearly Parameterized Output

$$V(t) = h(c_{ss}^{-}(t), I(t); \theta)$$

- θ contains many parameters
- Linear dependence b/w parameters?

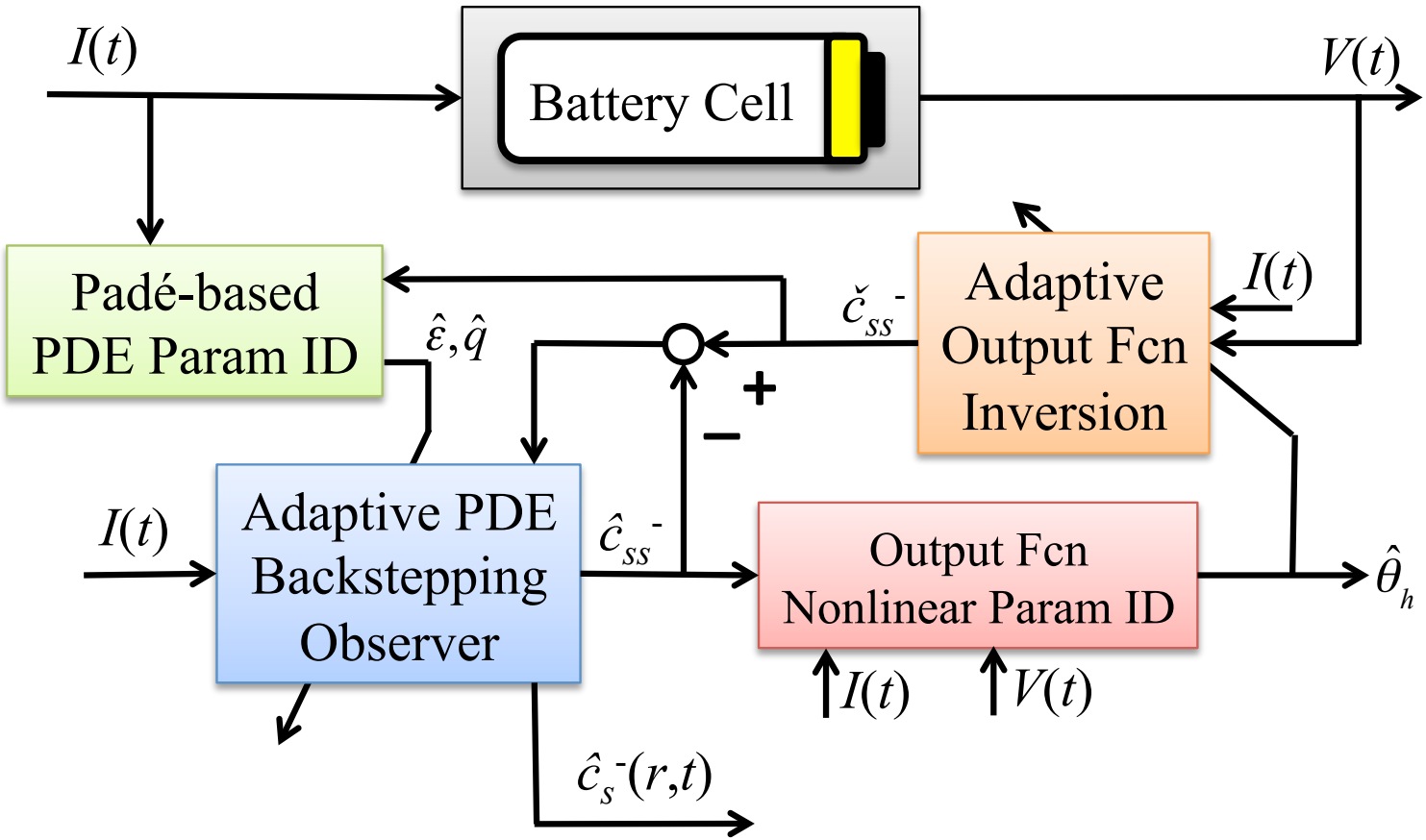
Identifiability Analysis

- Linearly independent parameter subset : $\theta_h = [n_{Li}, R_f]^T$
  - n_{Li} : Moles of cyclable Li (Capacity Fade)
  - R_f : Resistance of current collectors, electrolyte, etc. (Power Fade)

Apply nonlinear recursive least squares to θ_h

Adaptive Observer

Combined State & Parameter Estimation



Adaptive Output Function Inversion

Require $c_{ss}^{-}(t)$ for output error injection

Adaptive Output Function Inversion

Require $c_{ss}^{-}(t)$ for output error injection

Nonlinear Function Inversion

Solve $g(c_{ss}^{-}, t) = 0$ for c_{ss}^{-}, where

$$g(c_{ss}^{-}, t) = h(c_{ss}^{-}(t), I(t); \hat{\theta}_h) - V(t)$$

Adaptive Output Function Inversion

Require $c_{ss}^{-}(t)$ for output error injection

Nonlinear Function Inversion

Solve $g(c_{ss}^{-}, t) = 0$ for c_{ss}^{-}, where

$$g(c_{ss}^{-}, t) = h(c_{ss}^{-}(t), I(t); \hat{\theta}_h) - V(t)$$

Newton's Method

Main Idea: Construct ODE with exp. stable equilibrium $g(c_{ss}^{-}, t) = 0$

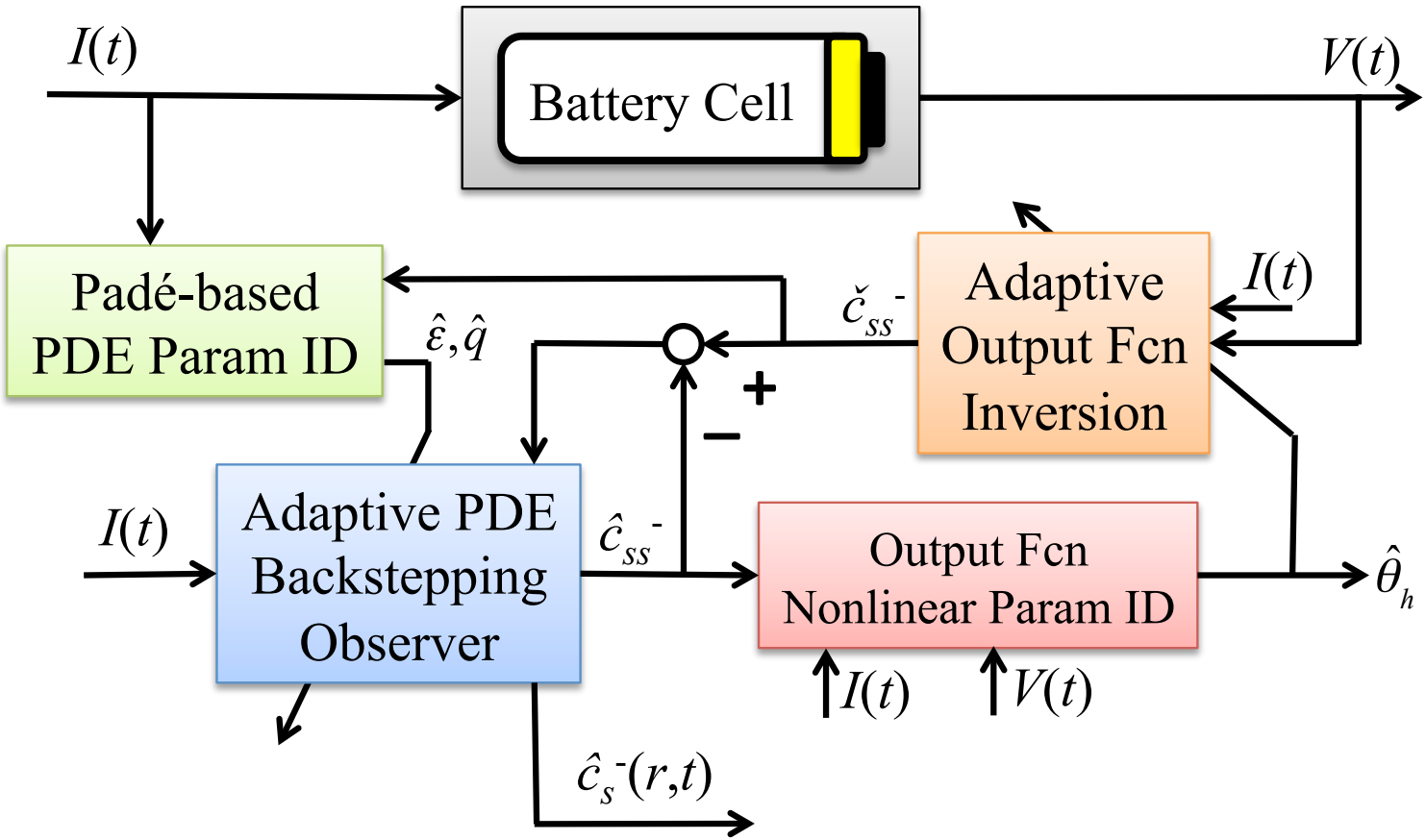
$$\frac{d}{dt}\left[g(\check{c}_{ss}^{-}, t)\right] = -\gamma g(\check{c}_{ss}^{-}, t)$$

expands to a Newton's method update law:

$$\frac{d}{dt}\check{c}_{ss}^{-} = -\frac{\gamma g(\check{c}_{ss}^{-}, t) + \frac{\partial g}{\partial t}(\check{c}_{ss}^{-}, t)}{\frac{\partial g}{\partial c_{ss}^{-}}(\check{c}_{ss}^{-}, t)}$$

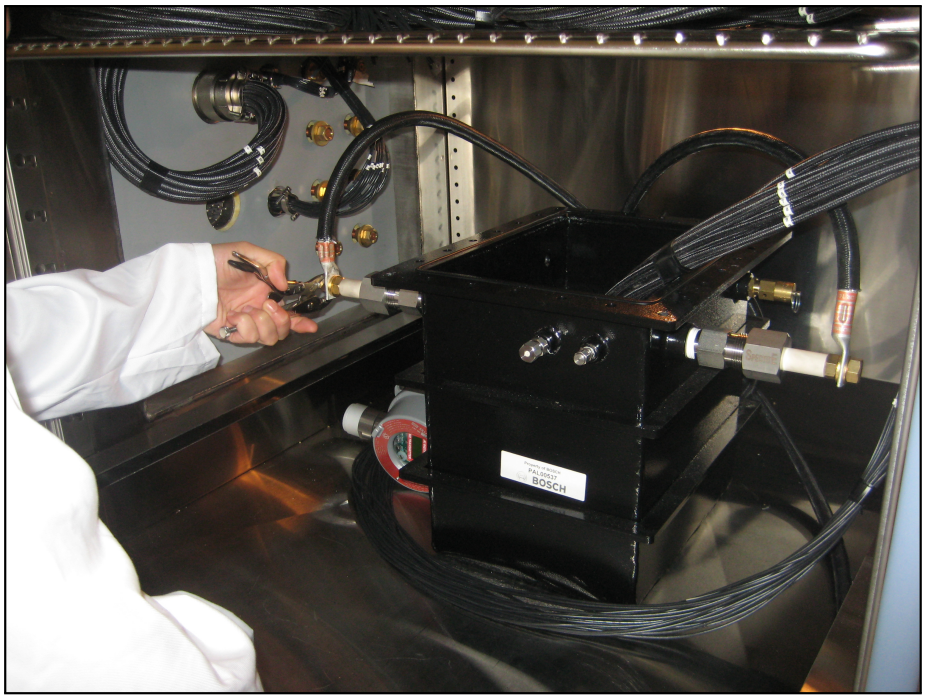
Adaptive Observer

Combined State & Parameter Estimation



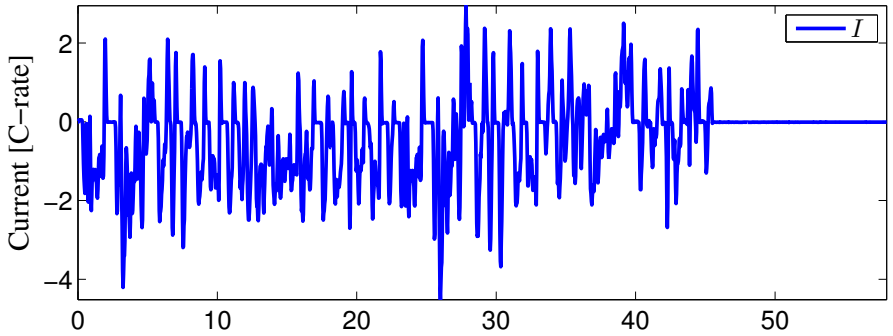
Experimental Testing at Bosch RTC





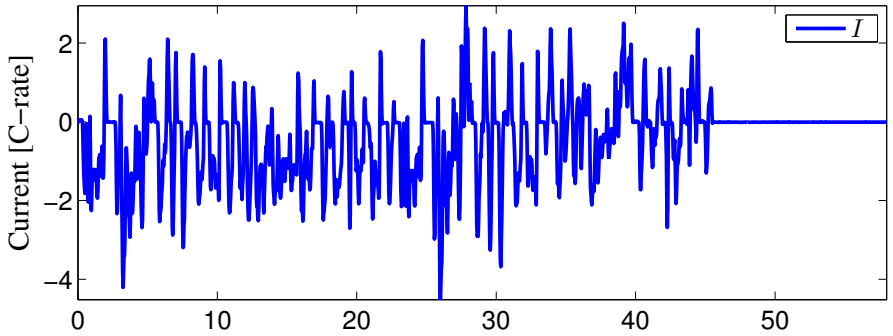
Results

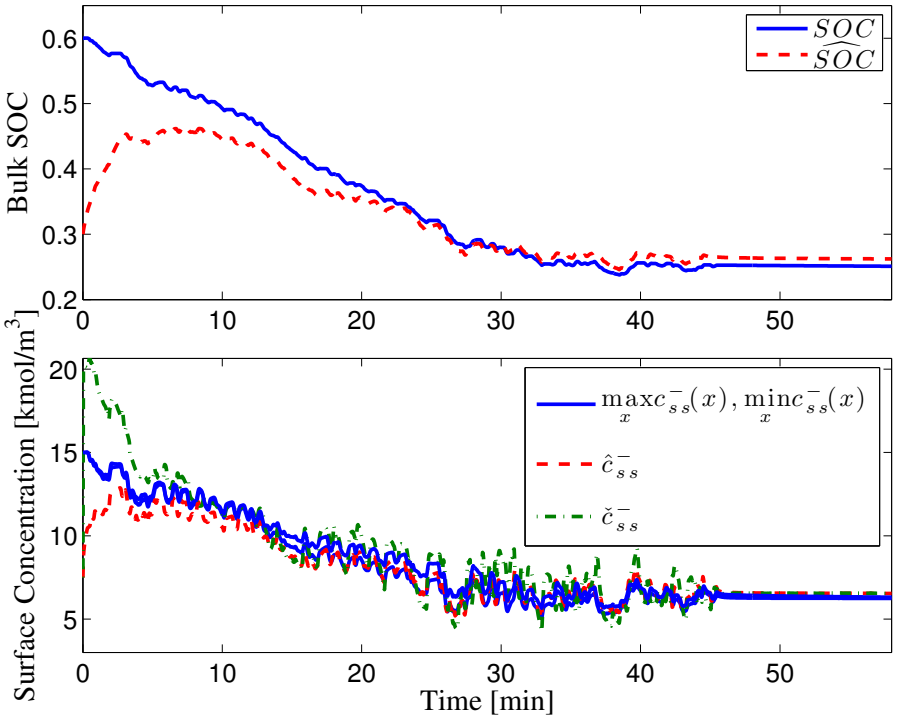
UDDS Drive Cycle Input



Results

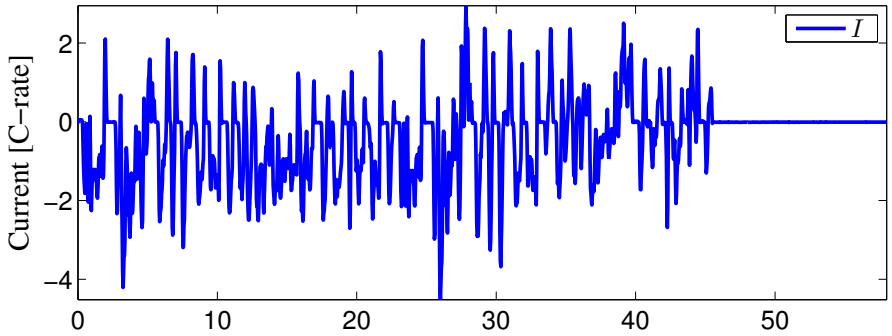
UDDS Drive Cycle Input

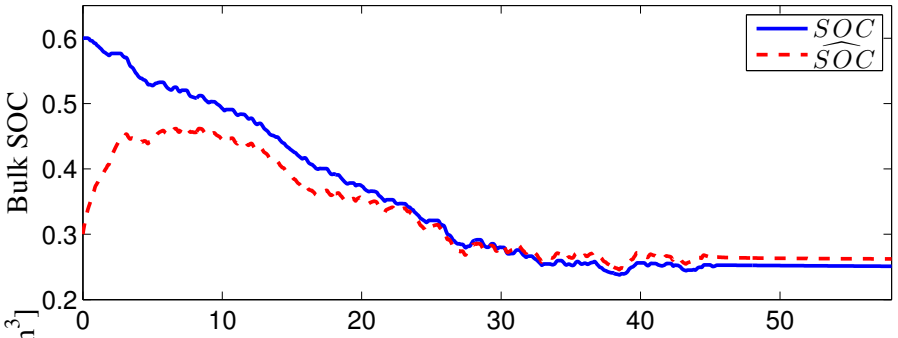


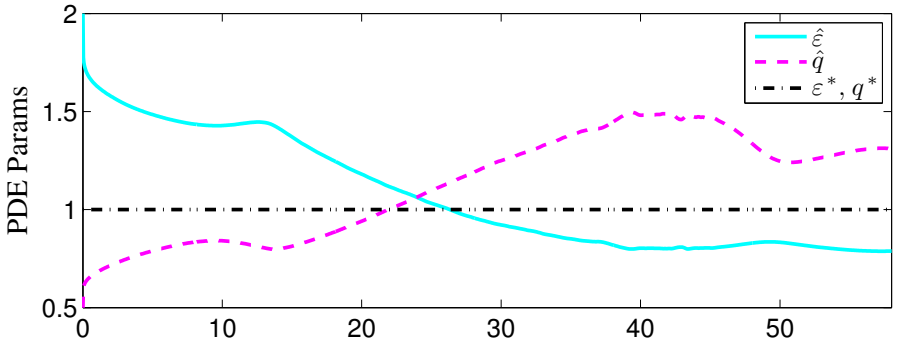


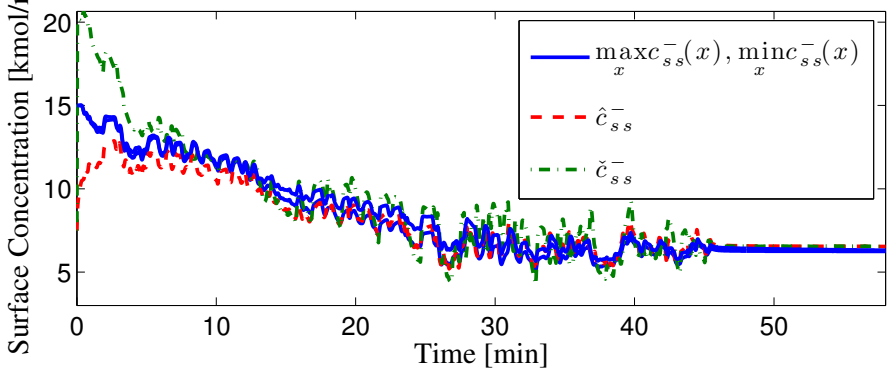
Results

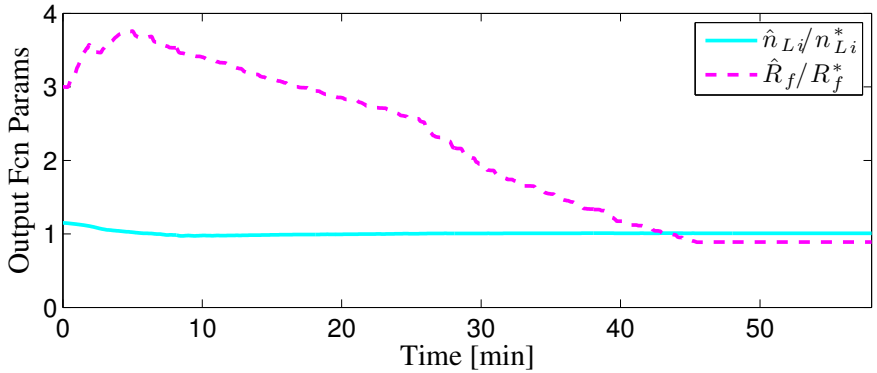
UDDS Drive Cycle Input





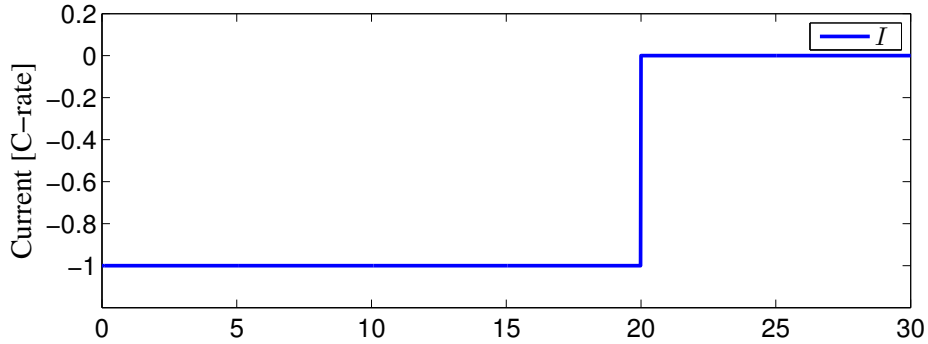


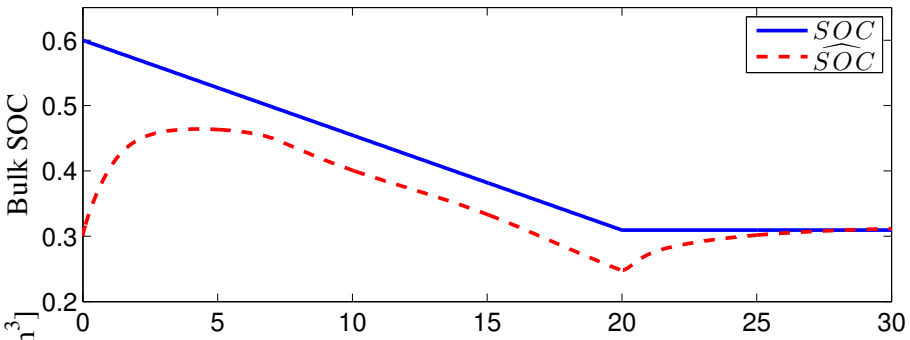


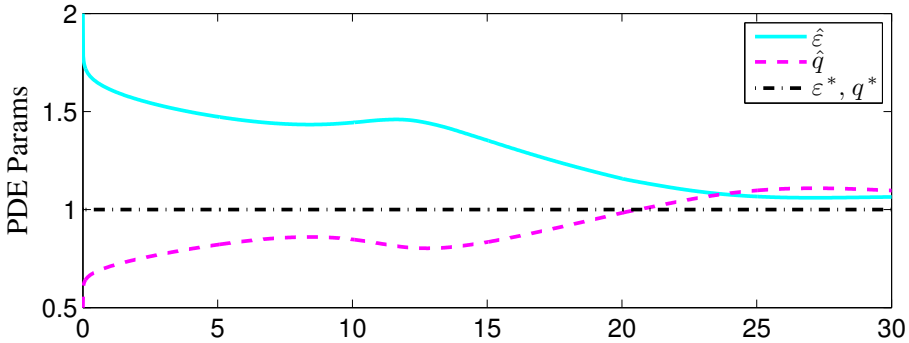


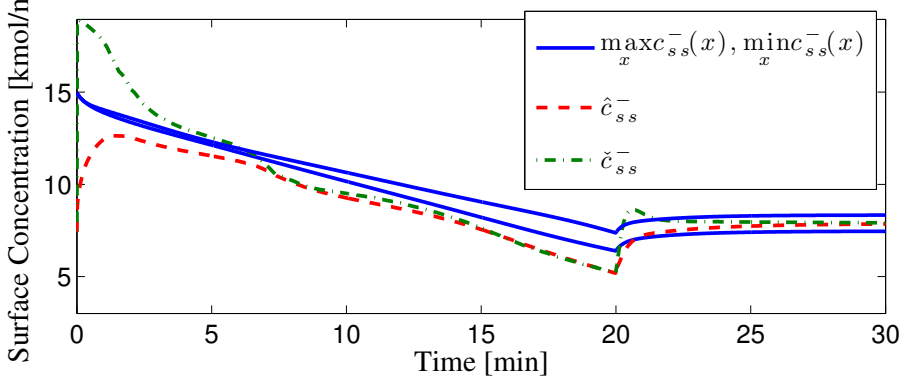
Results

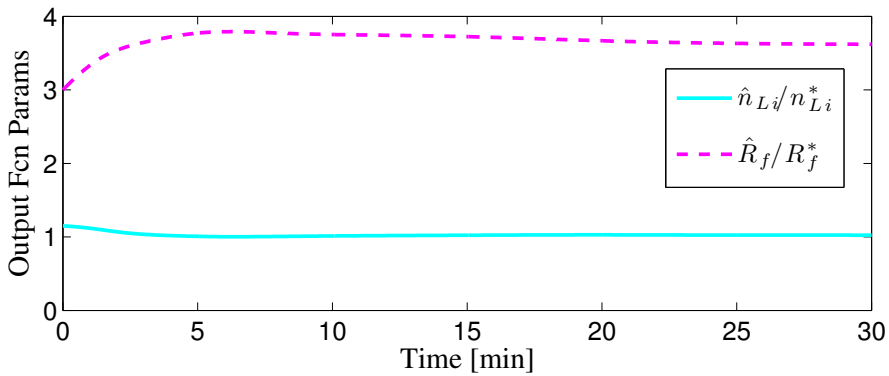
Constant 1C Discharge





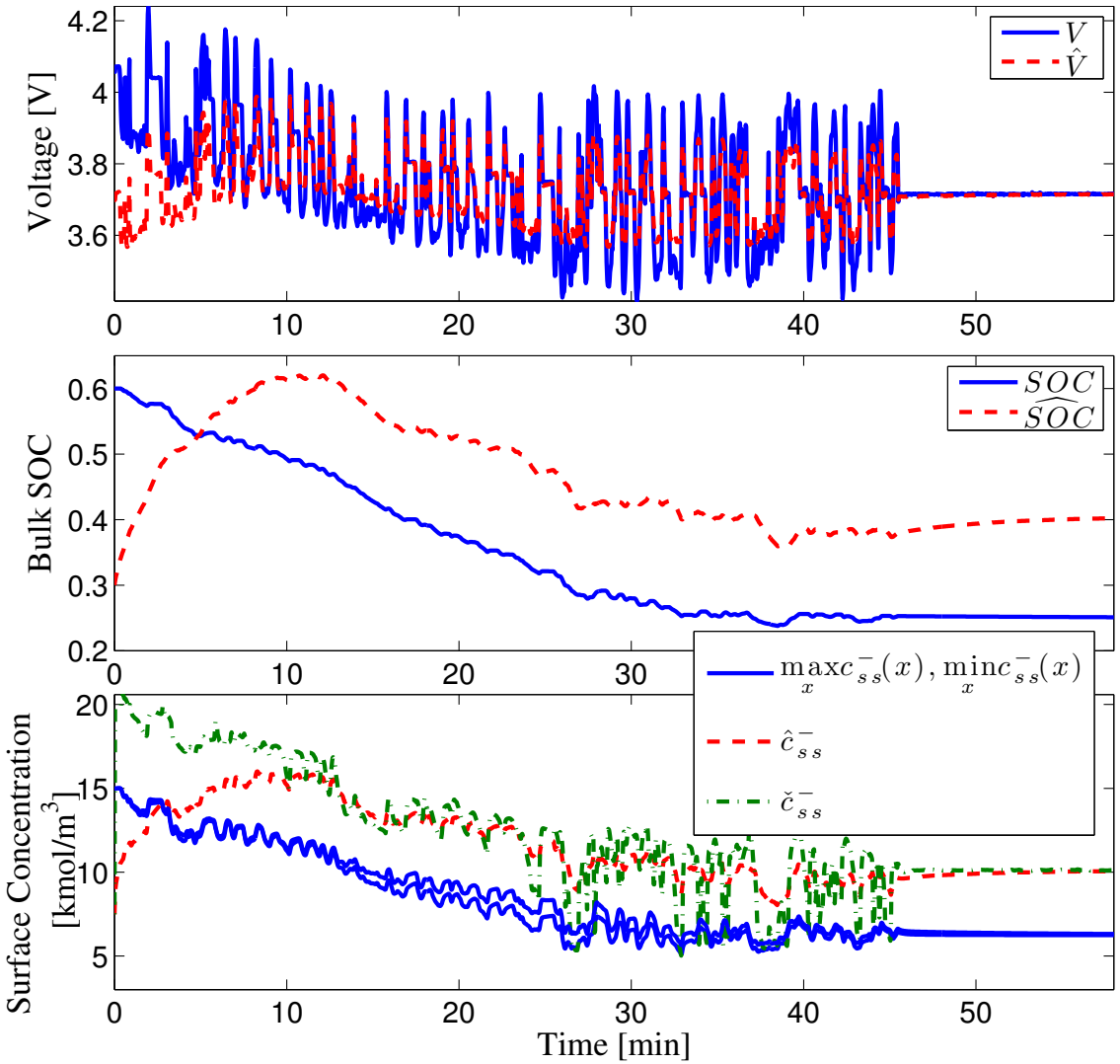






Results

No Parameter Adaption - Bias in State Estimates



Outline

1. [SOC/SOH Estimation] Looking Inside w/ Models, Meas., and Math
2. [Constrained Control] Operate at the Limits, Safely
3. Summary

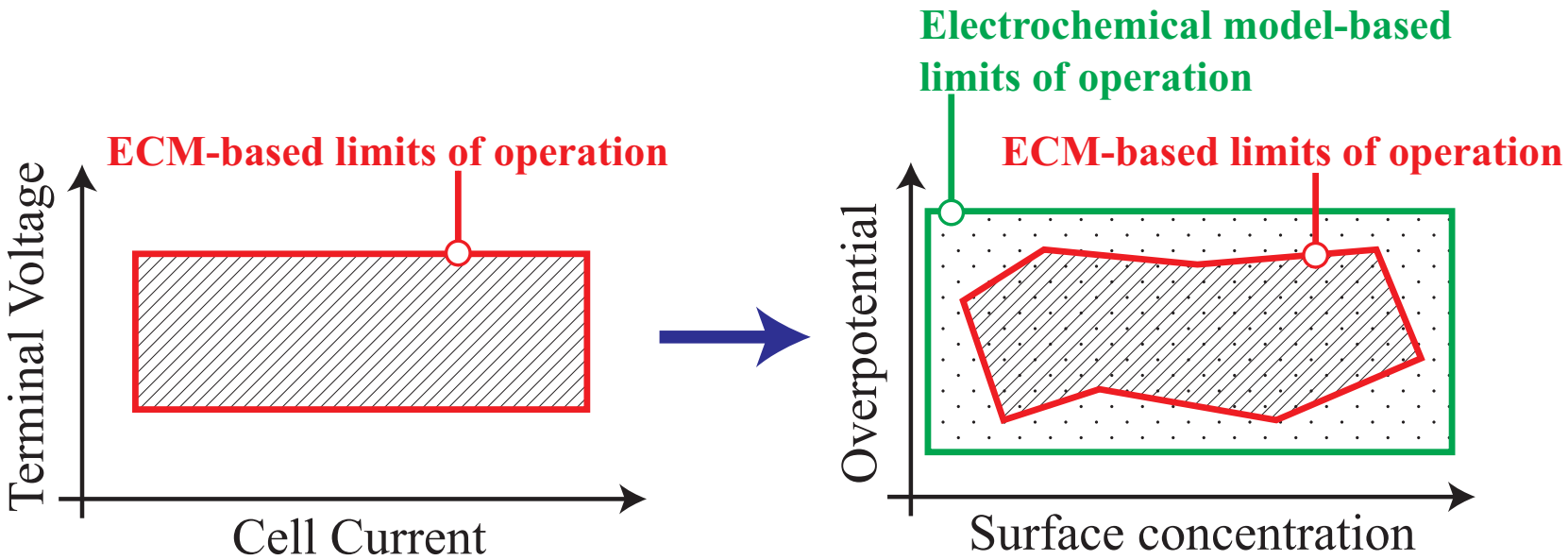
Operate Batteries at their Physical Limits



Operate Batteries at their Physical Limits

Problem Statement

Given accurate state estimates, govern the electric current such that safe operating constraints are satisfied.

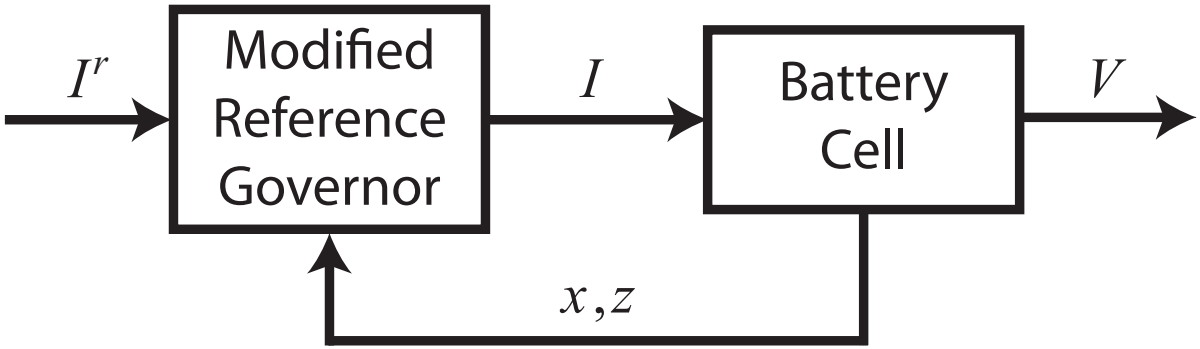


Constraints

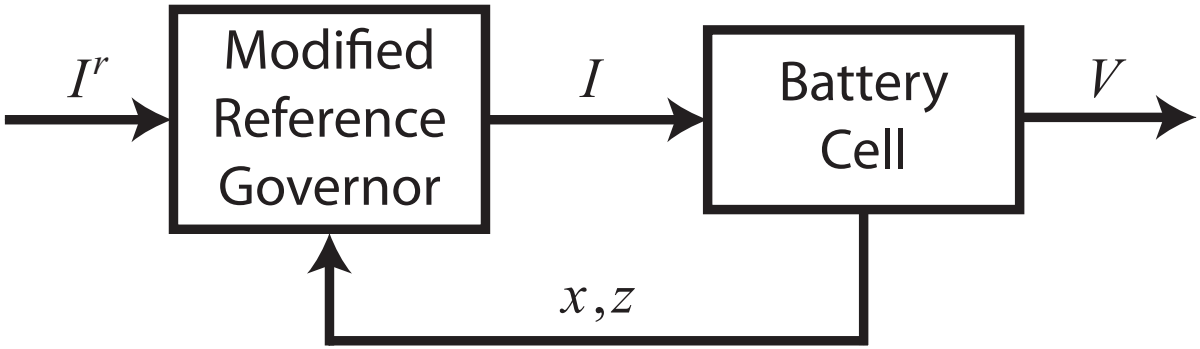
Variable	Definition	Constraint
$I(t)$	Current	Power electronics limits
$c_s^{\pm}(x,r,t)$	Li concentration in solid	Saturation/depletion
$\frac{\partial c_s^{\pm}}{\partial r}(x,r,t)$	Li concentration gradient	Diffusion-induced stress
$c_e(x,t)$	Li concentration in electrolyte	Saturation/depletion
$T(t)$	Temperature	High/low temps accel. aging
$\eta_s(x,t)$	Side-rxn overpotential	Li plating, dendrite formation

Each variable, y, must satisfy $y_{\min} \leq y \leq y_{\max}$.

The Algorithm: Modified Reference Governor (MRG)



The Algorithm: Modified Reference Governor (MRG)

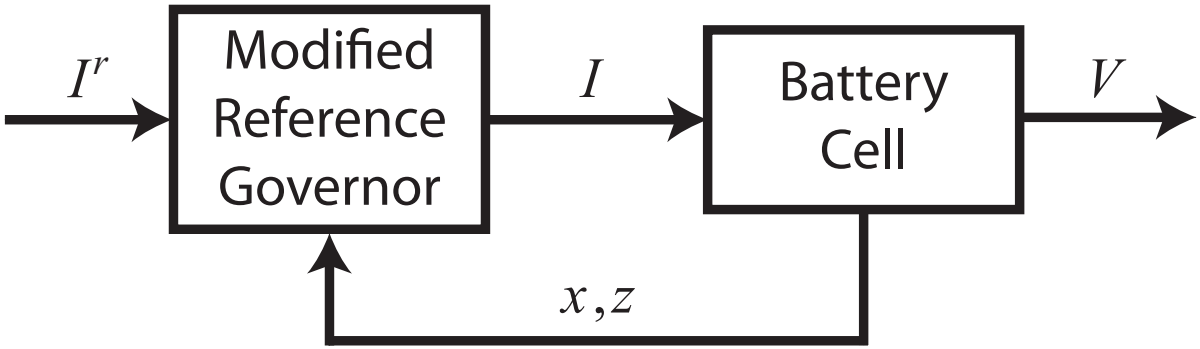


MRG Equations

$$I[k+1] = \beta^*[k] I^r[k], \qquad \beta^* \in [0,1],$$

$$\beta^*[k] = \max\{\beta \in [0,1] : (x(t), z(t)) \in \mathcal{O}\}$$

The Algorithm: Modified Reference Governor (MRG)



MRG Equations

$$I[k+1] = \beta^*[k] I^r[k], \qquad \beta^* \in [0,1],$$

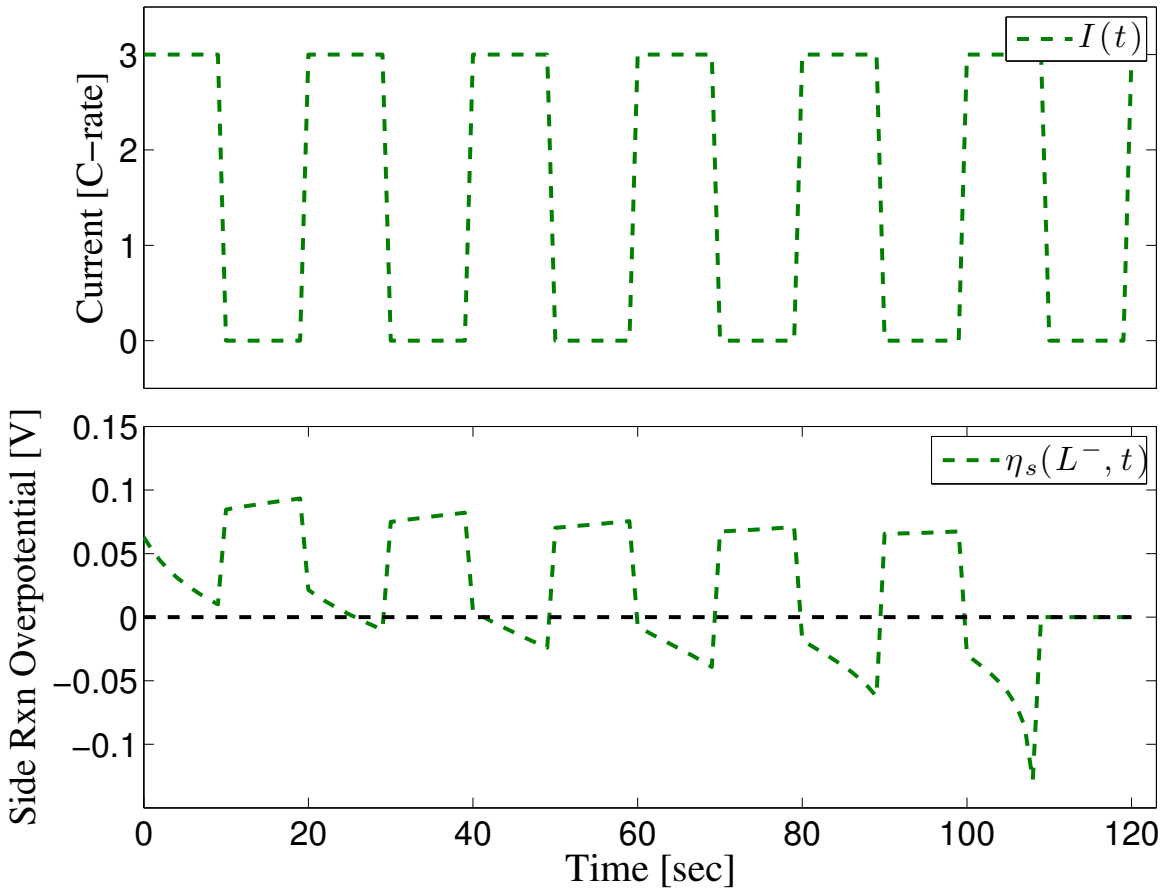
$$\beta^*[k] = \max\{\beta \in [0,1] : (x(t), z(t)) \in \mathcal{O}\}$$

Def'n: Admissible Set $\mathcal{O}$

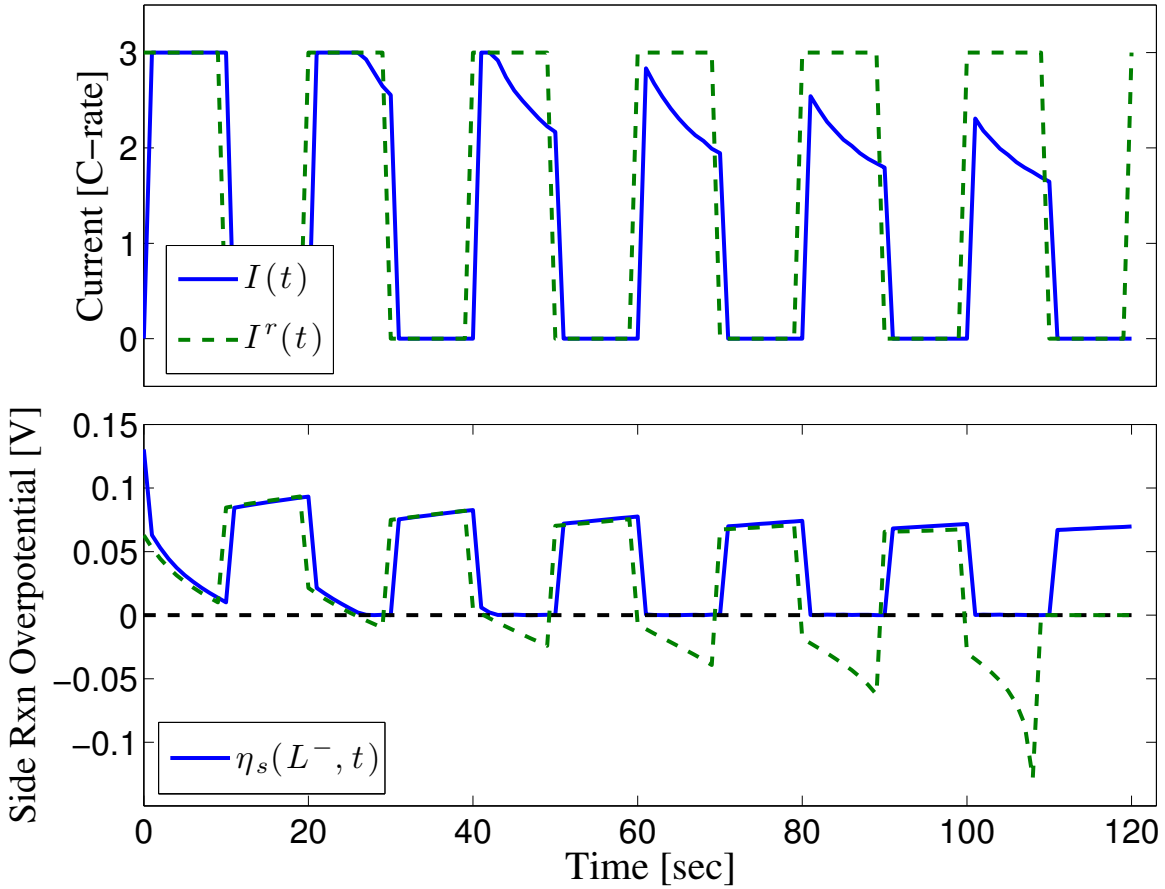
$$\mathcal{O} = \{(x(t), z(t)) : y(\tau) \in \mathcal{Y}, \forall \tau \in [t, t+T_s]\}$$

$$\begin{aligned} \dot{x}(t) &= f(x(t), z(t), \beta I^r) \\ 0 &= g(x(t), z(t), \beta I^r) \\ y(t) &= C_1 x(t) + C_2 z(t) + D \cdot \beta I^r + E \end{aligned}$$

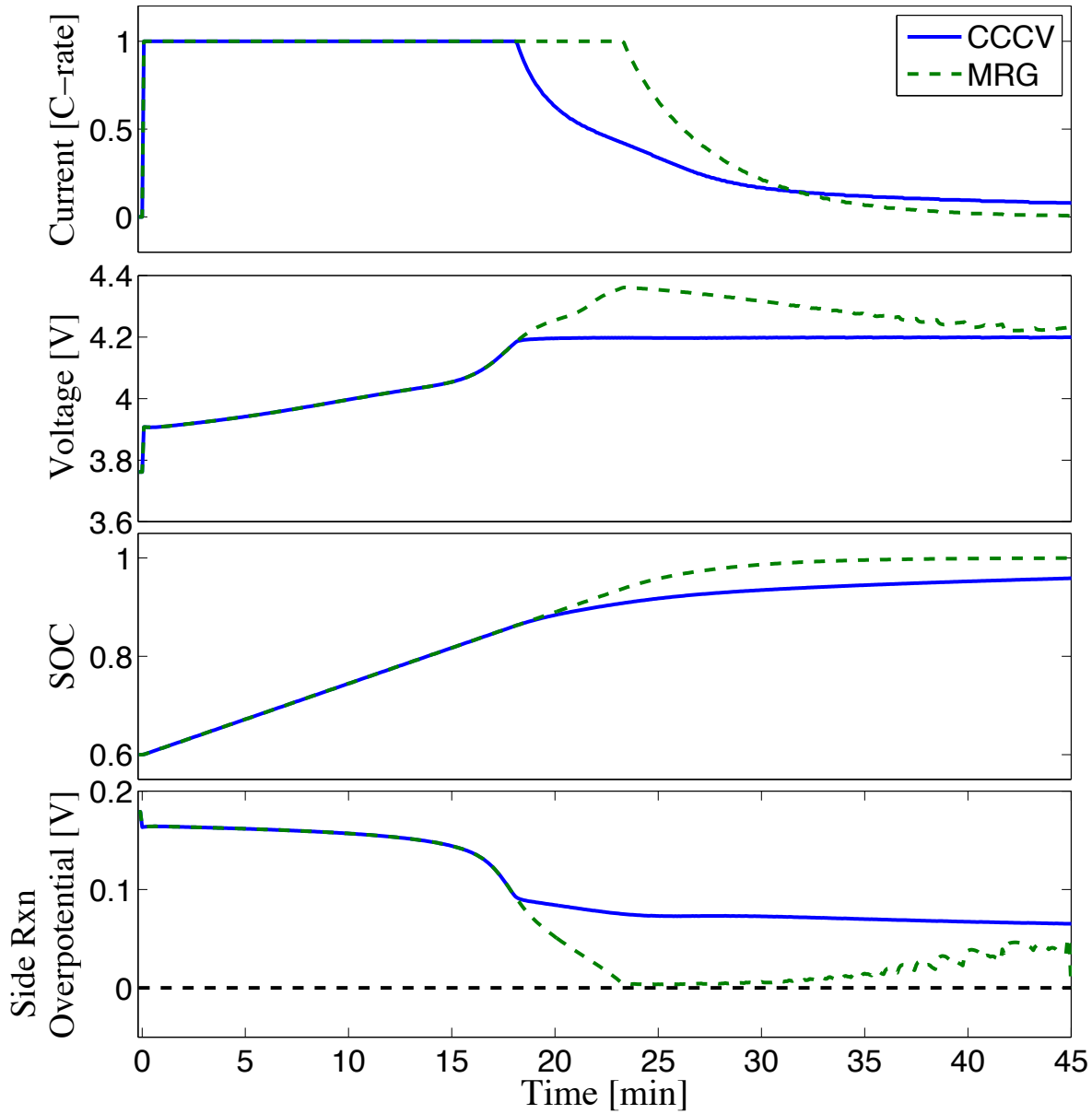
Constrained Control of EChem States



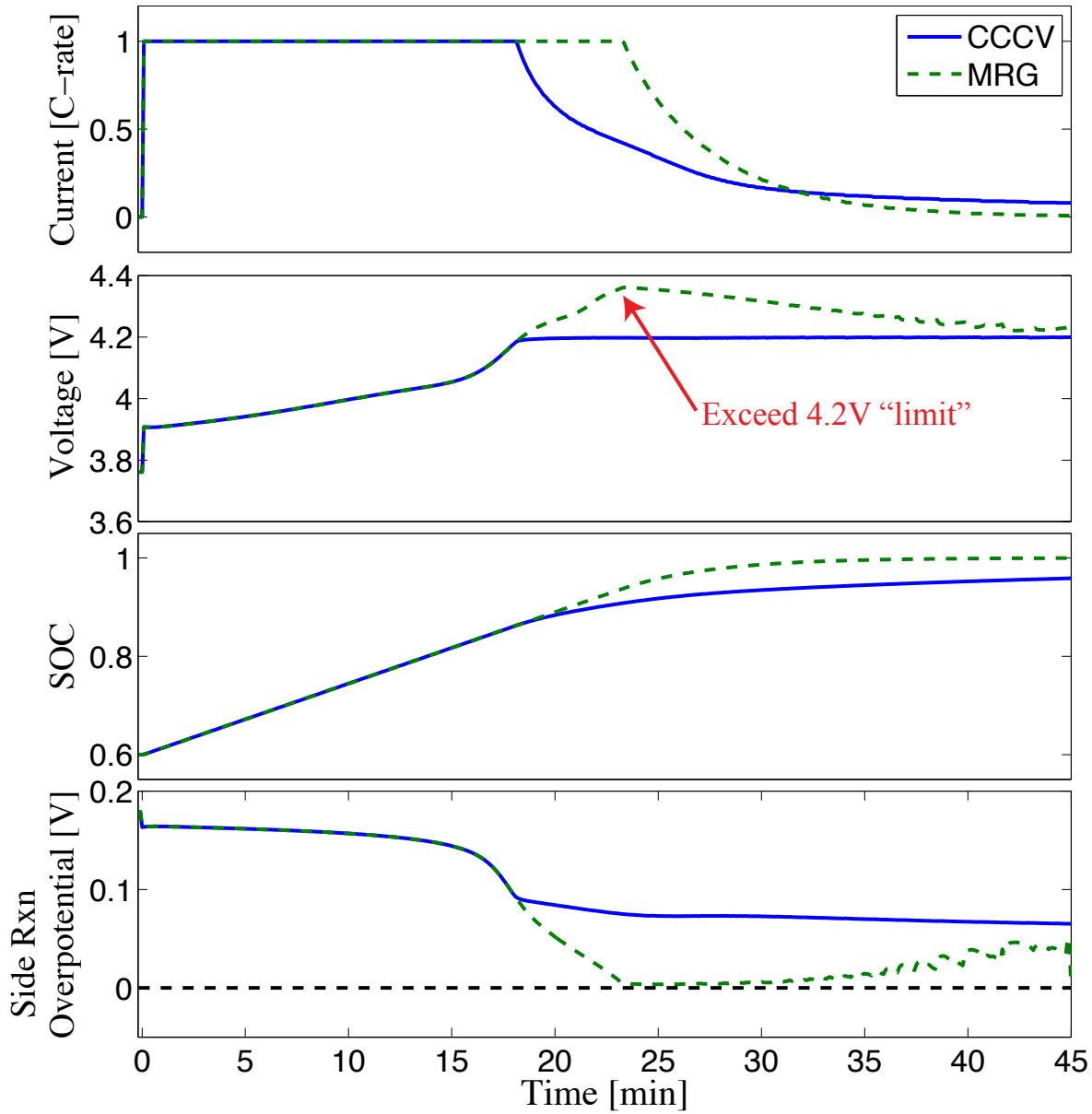
Constrained Control of EChem States



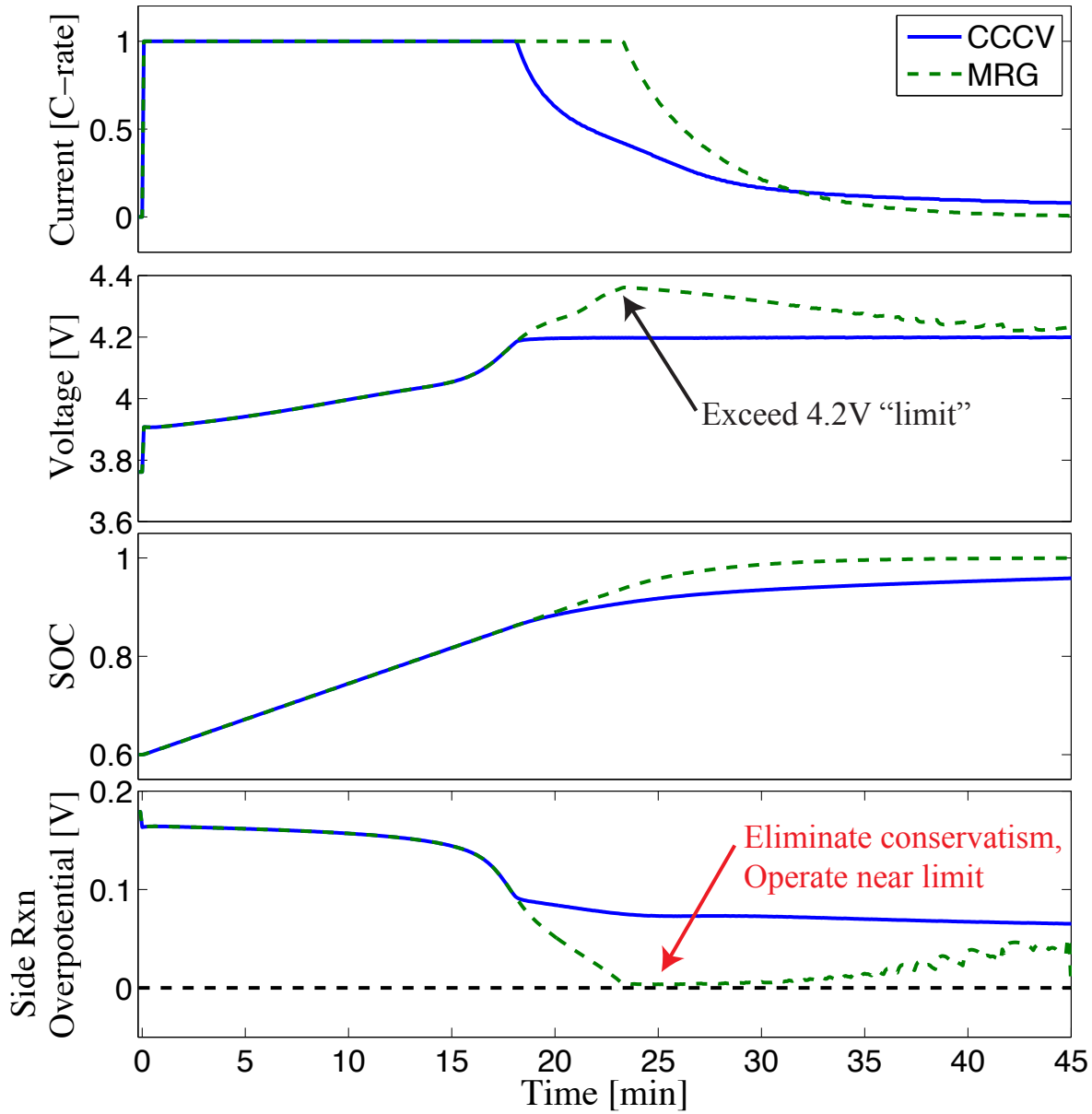
Application to Charging



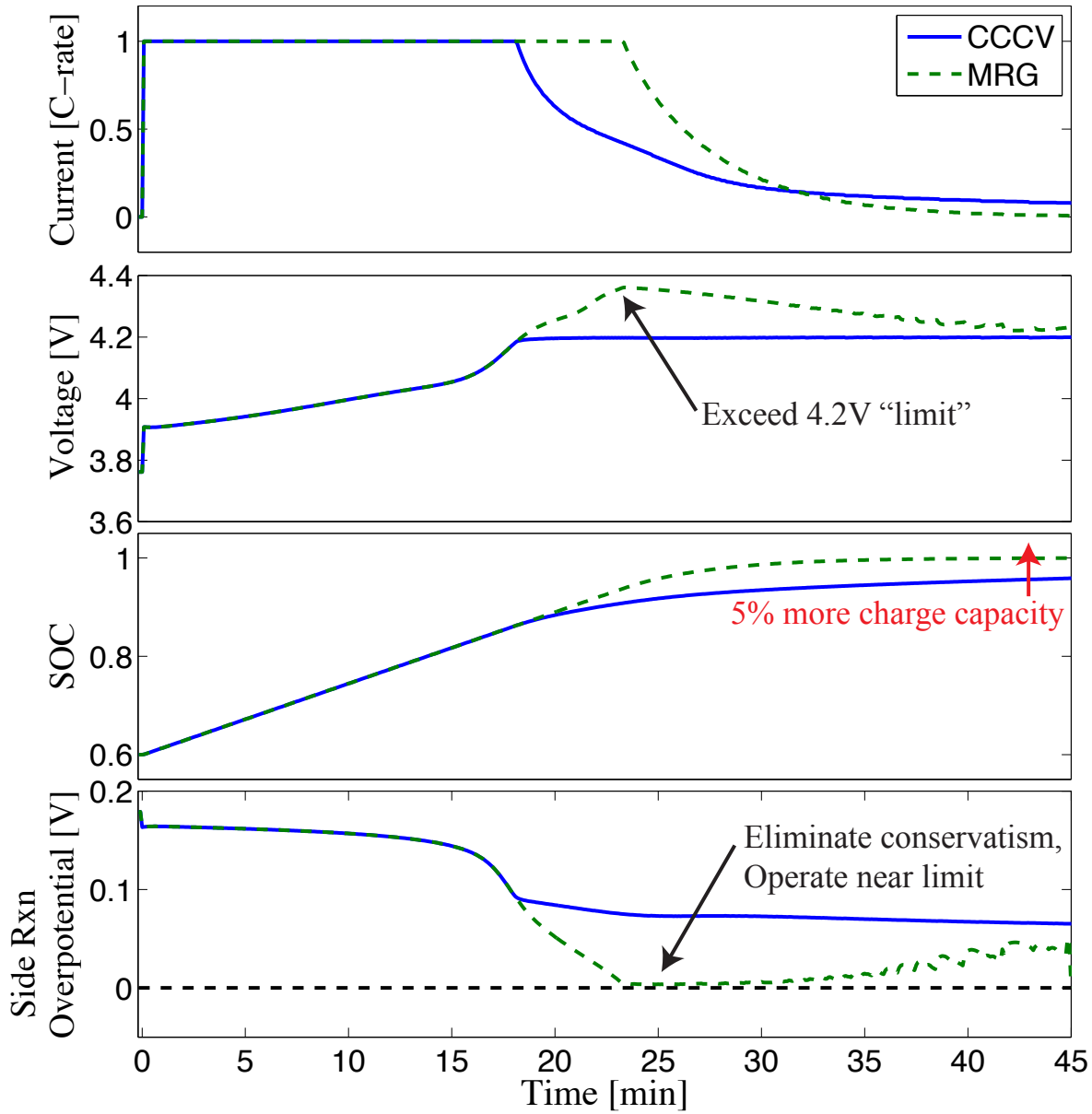
Application to Charging



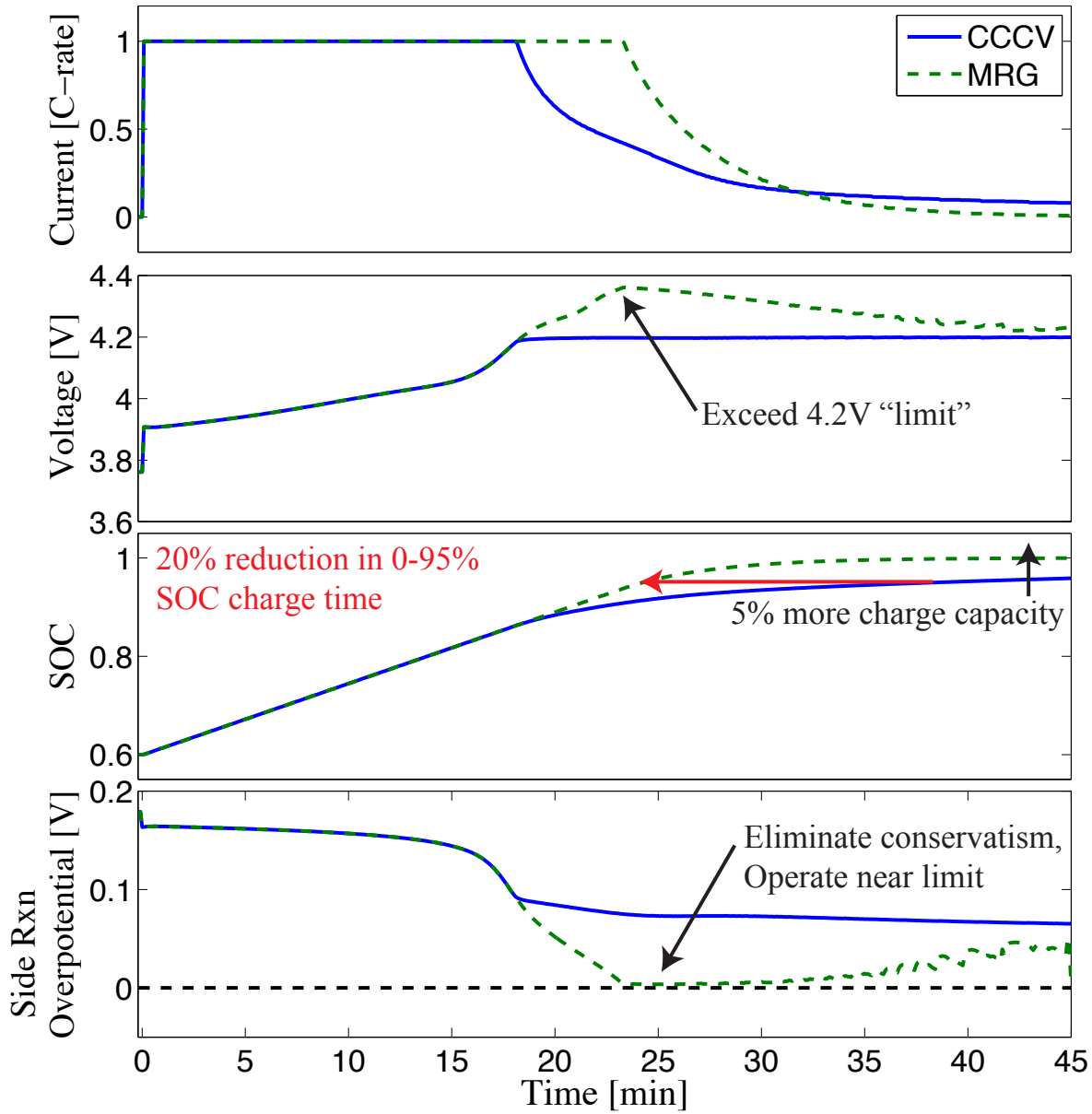
Application to Charging



Application to Charging



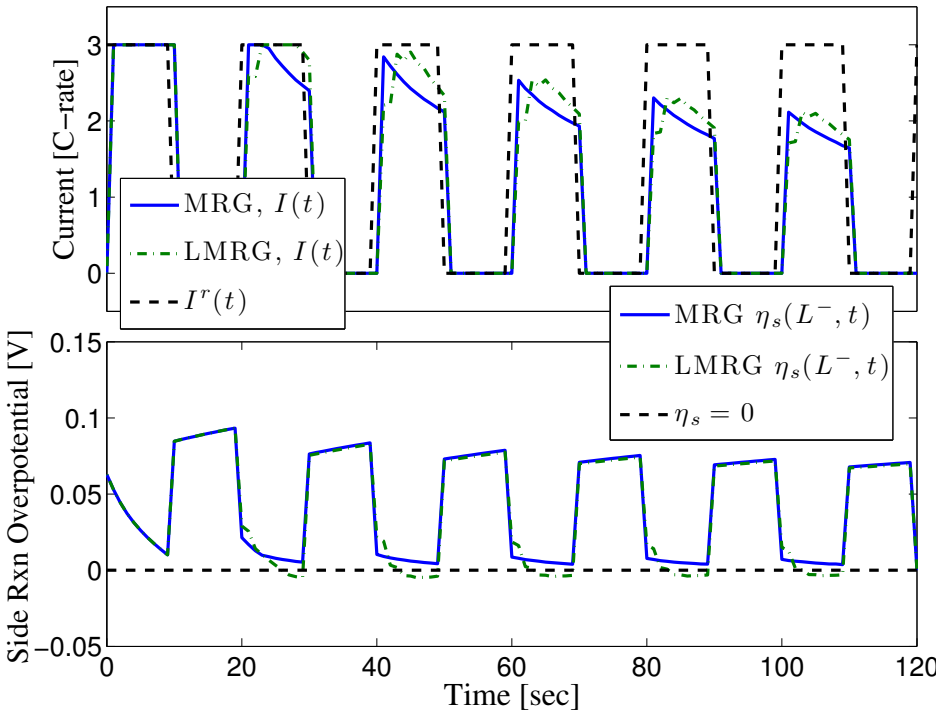
Application to Charging

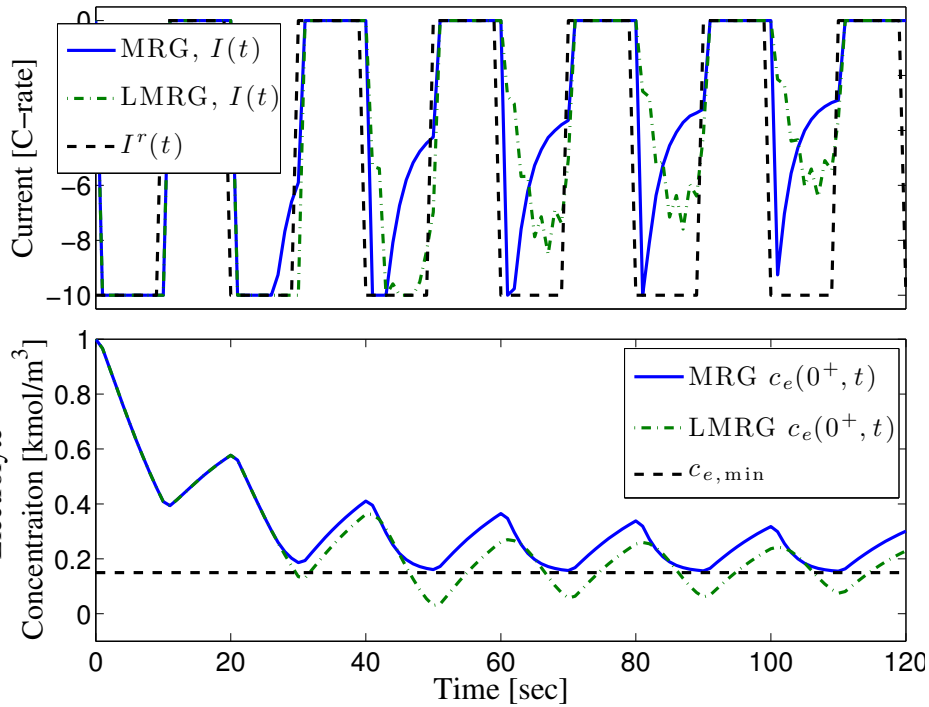


Linear Reference Governor

Modified Reference Governor (MRG) : Simulations

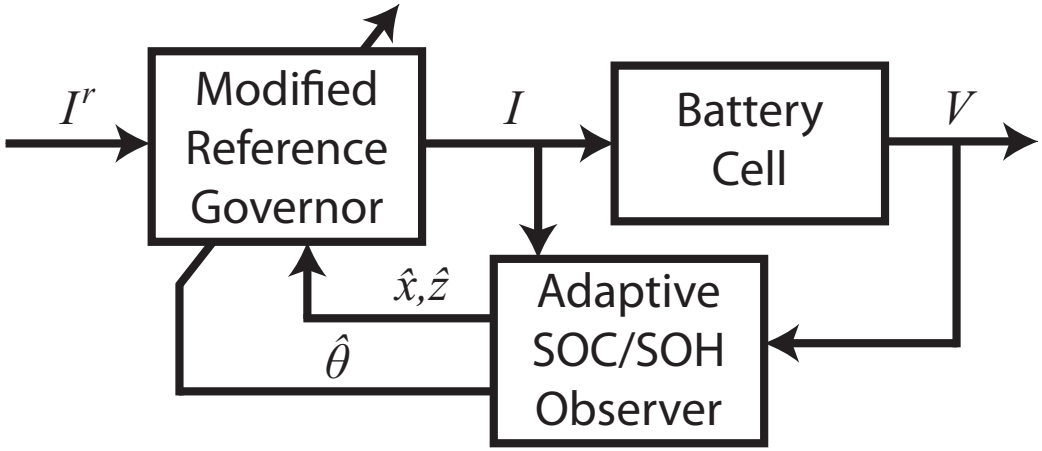
Linearized MRG (LMRG) : Explicit function evaluation





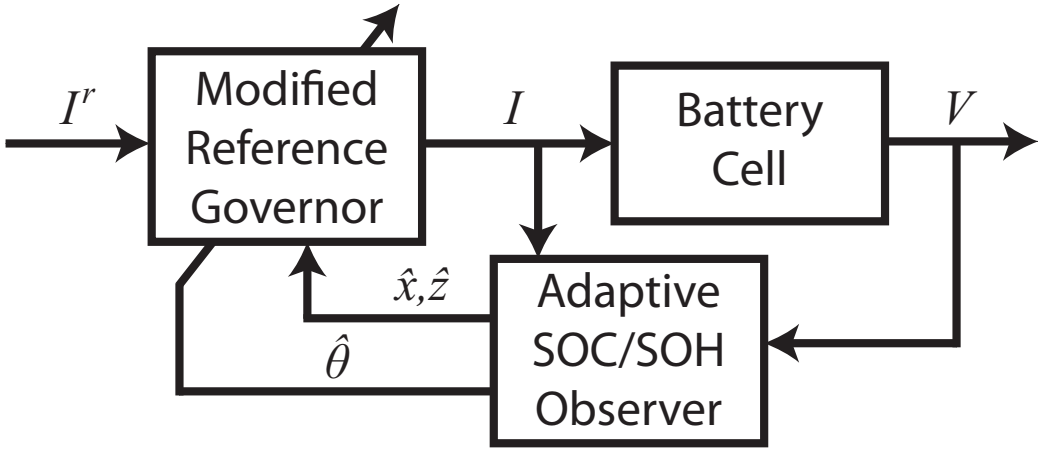
Future

State/Param Est. +
Reference Governor

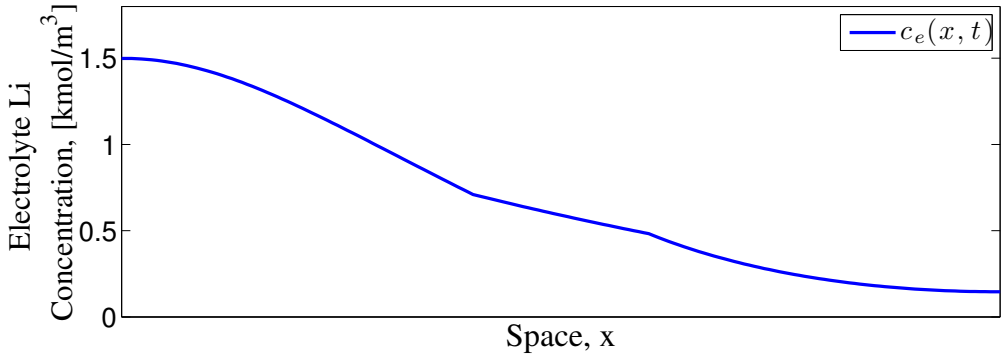


Future

State/Param Est. + Reference Governor



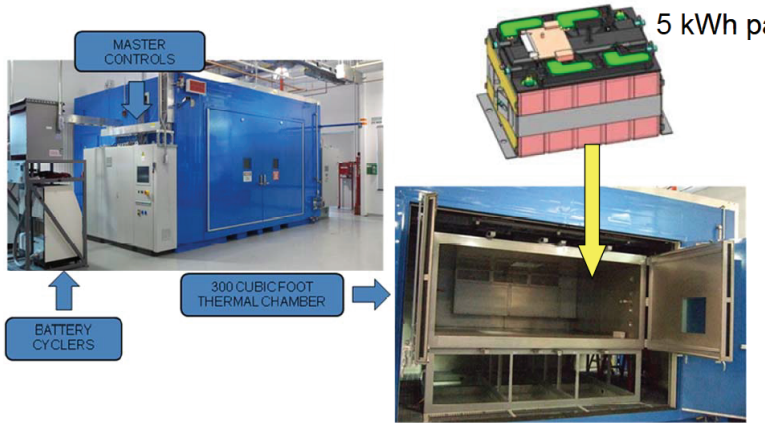
Incorporate electrolyte dynamics



Future

Experimental validation - continued collaboration w/ Bosch RTC, Cobasys, and ARPA-E

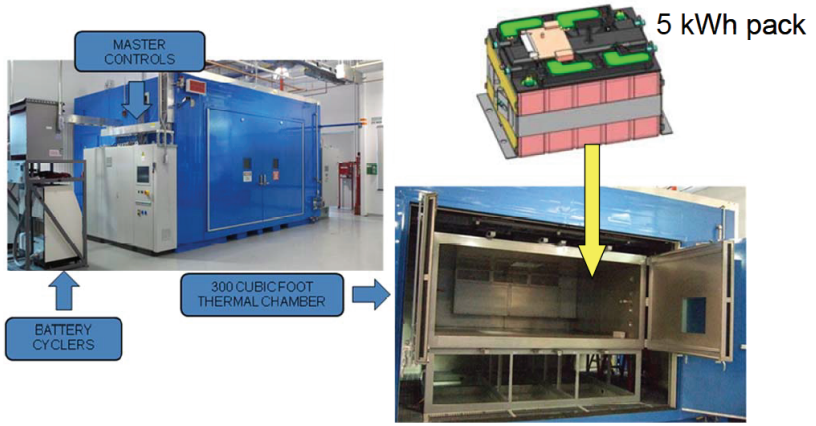




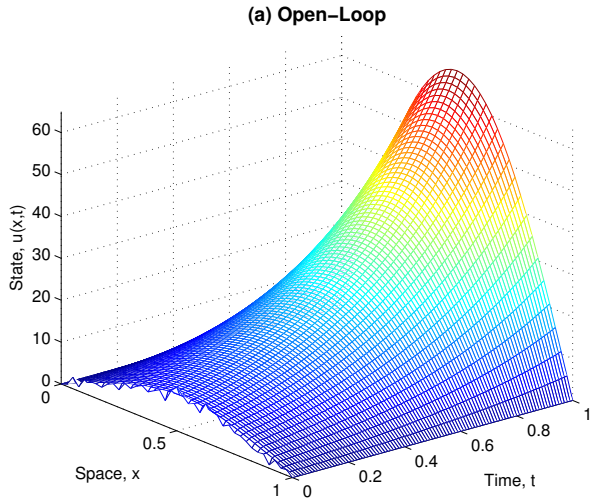
Future

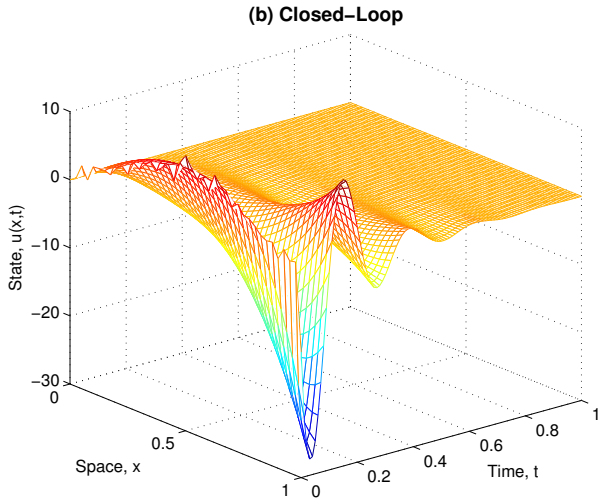
Experimental validation - continued collaboration w/ Bosch RTC, Cobasys, and ARPA-E





Optimal control theory for PDEs

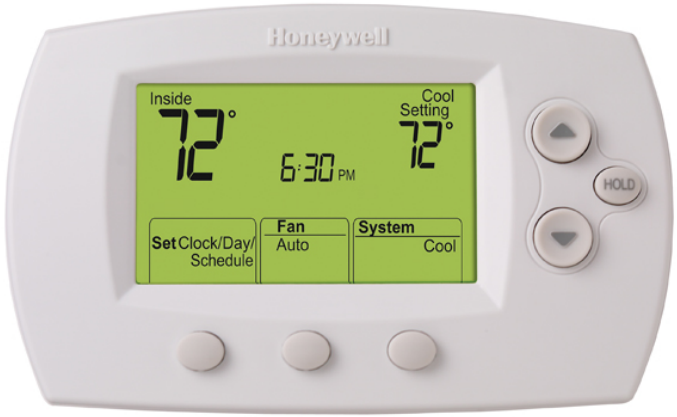




Future - Smart Grid

Demand Response via Aggregated Energy Storage

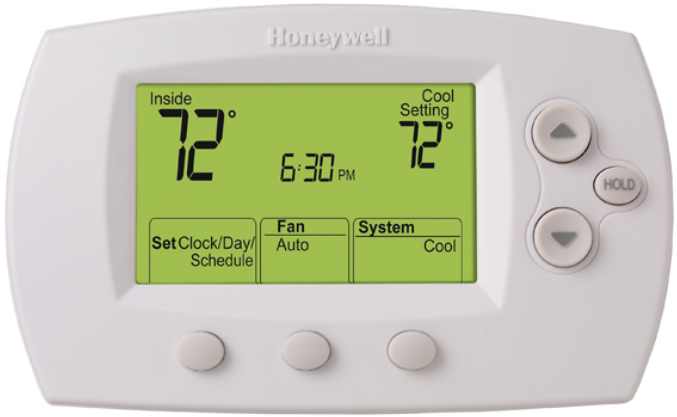
- Modeling? Identification? Estimation? Control?
- Communication? Signals?
- Networked Control? Security?



Future - Smart Grid

Demand Response via Aggregated Energy Storage

- Modeling? Identification? Estimation? Control?
- Communication? Signals?
- Networked Control? Security?



Microgrid demonstration projects Interconnected

dynamics of economic power market and power system

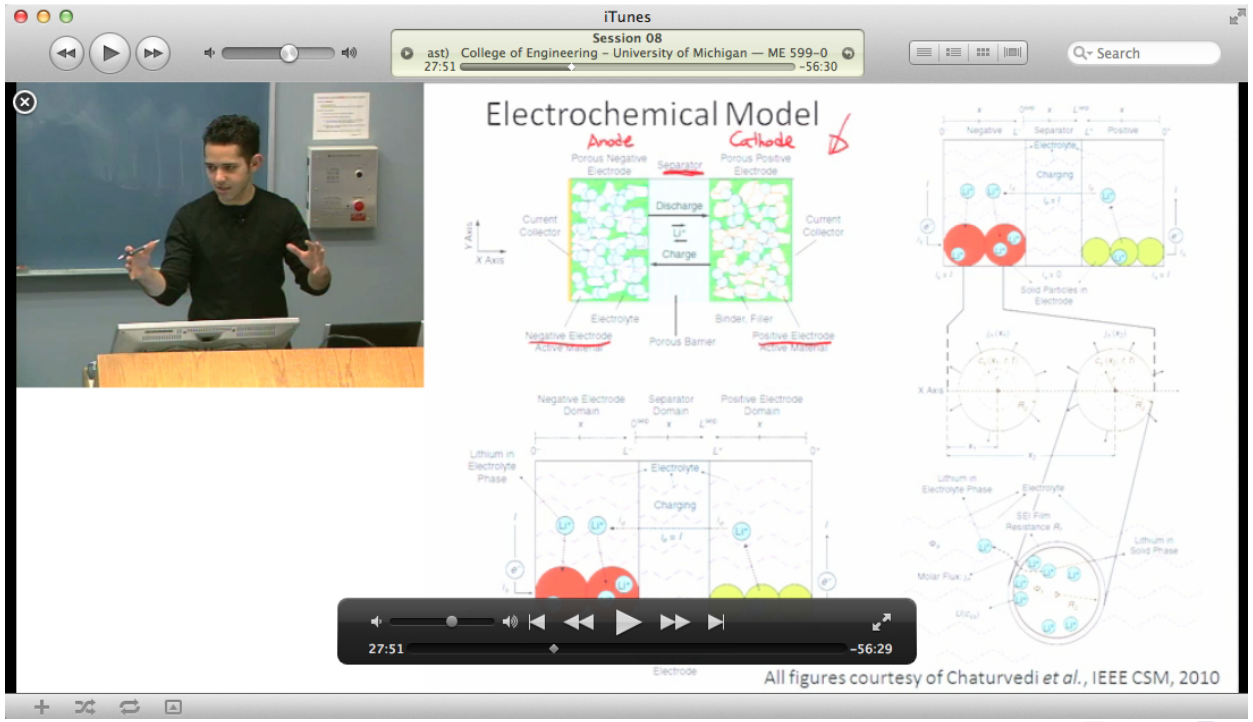


Battery Systems and Control Course

Funded by DOE-ARRA, University of Michigan

Enrollment

- Winter 2010: 59 + 5 distance
- Winter 2011: 50 + 26 distance
- ME, EE, ChemE, CS, Energy Systems, MatSci, Physics, Math
- Undergraduates
- Graduate students
- Professionals
  - Tesla Motors, General Motors, Roush, US Army



Outline

1. [SOC/SOH Estimation] Looking Inside w/ Models, Meas., and Math
2. [Constrained Control] Operate at the Limits, Safely
3. Summary

Summary

Simultaneous SOC/SOH estimation
of physically meaningful variables via electrochemical models,
PDE estimation theory, and adaptive control.

Constrained control of batteries
via an electrochemical model
and reference governors.

Control Theory + Electrochemical Battery Models:
A critically important and fundamentally rich research area

Thanks for your attention!
Questions?

Scott Moura, Ph.D.
http://flyingv.ucsd.edu/smoura/

Managing Overparameterization

$$\hat{\theta}_{pde} = \begin{bmatrix} \widehat{q\varepsilon^2} \\ \widehat{q\varepsilon} \\ \hat{\varepsilon} \end{bmatrix} \longrightarrow \begin{bmatrix} \hat{\varepsilon} \\ \hat{q} \end{bmatrix} = \hat{\theta}_{\varepsilon q}$$

Managing Overparameterization

$$\hat{\theta}_{pde} = \begin{bmatrix} \widehat{q\varepsilon^2} \\ \widehat{q\varepsilon} \\ \hat{\varepsilon} \end{bmatrix} \longrightarrow \begin{bmatrix} \hat{\varepsilon} \\ \hat{q} \end{bmatrix} = \hat{\theta}_{\varepsilon q}$$

$$\begin{bmatrix} 2 & 1 \\ 1 & 1 \\ 1 & 0 \end{bmatrix} \begin{bmatrix} \log \hat{\varepsilon} \\ \log \hat{q} \end{bmatrix} = \begin{bmatrix} \log\left(\hat{q\varepsilon^2}\right) \\ \log\left(\hat{q\varepsilon}\right) \\ \log\left(\hat{\varepsilon}\right) \end{bmatrix}$$

$$A_{\varepsilon q} \log(\hat{\theta}_{\varepsilon q}) = \log(\hat{\theta}_{pde})$$

$$\log(\hat{\theta}_{\varepsilon q}) = A^{+}_{\varepsilon q} \log(\hat{\theta}_{pde})$$

Managing Overparameterization

$$\hat{\theta}_{pde} = \begin{bmatrix} \widehat{q\varepsilon^2} \\ \widehat{q\varepsilon} \\ \hat{\varepsilon} \end{bmatrix} \longrightarrow \begin{bmatrix} \hat{\varepsilon} \\ \hat{q} \end{bmatrix} = \hat{\theta}_{\varepsilon q}$$

$$\begin{bmatrix} 2 & 1 \\ 1 & 1 \\ 1 & 0 \end{bmatrix} \begin{bmatrix} \log \hat{\varepsilon} \\ \log \hat{q} \end{bmatrix} = \begin{bmatrix} \log\left(\hat{q\varepsilon^2}\right) \\ \log\left(\hat{q\varepsilon}\right) \\ \log\left(\hat{\varepsilon}\right) \end{bmatrix}$$

$$\begin{aligned} A_{\varepsilon q} \log(\hat{\theta}_{\varepsilon q}) &= \log(\hat{\theta}_{pde}) \\ \log(\hat{\theta}_{\varepsilon q}) &= A^{+}_{\varepsilon q} \log(\hat{\theta}_{pde}) \end{aligned}$$

Remark: $A^{+}_{\varepsilon q} = \left(A^{T}_{\varepsilon q} A_{\varepsilon q}\right)^{-1} A^{T}_{\varepsilon q}$ is the Moore-Penrose psuedoinverse of $A_{\varepsilon q}$

PHEV Power Management

Problem Statement

Design a supervisory control algorithm for plug-in hybrid electric vehicles (PHEVs) that splits engine and battery power in some optimal sense.



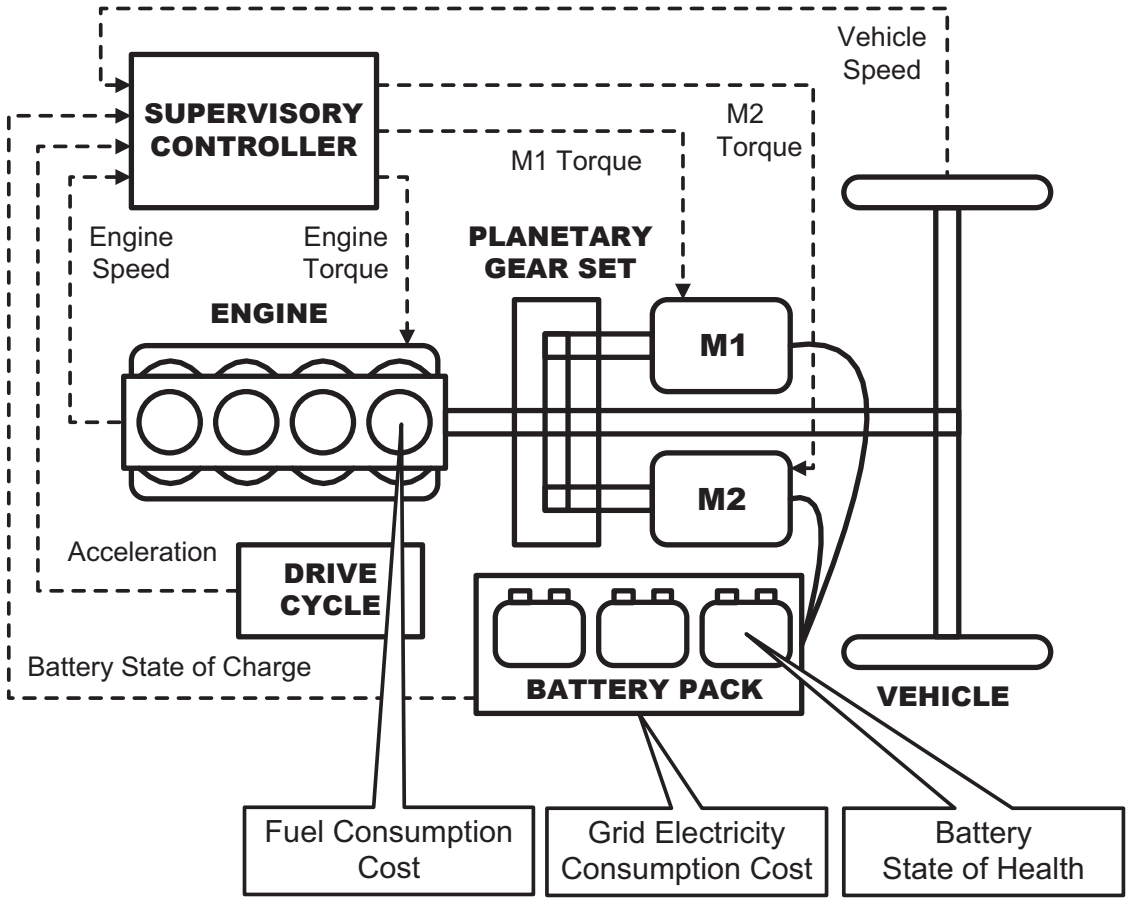
J. Voelcker, "Plugging Away in a Prius," *IEEE Spectrum*, vol. 45, pp. 30-48, 2008.



Power-Split PHEV Model

Ex: Toyota Prius, Ford Escape Hybrid

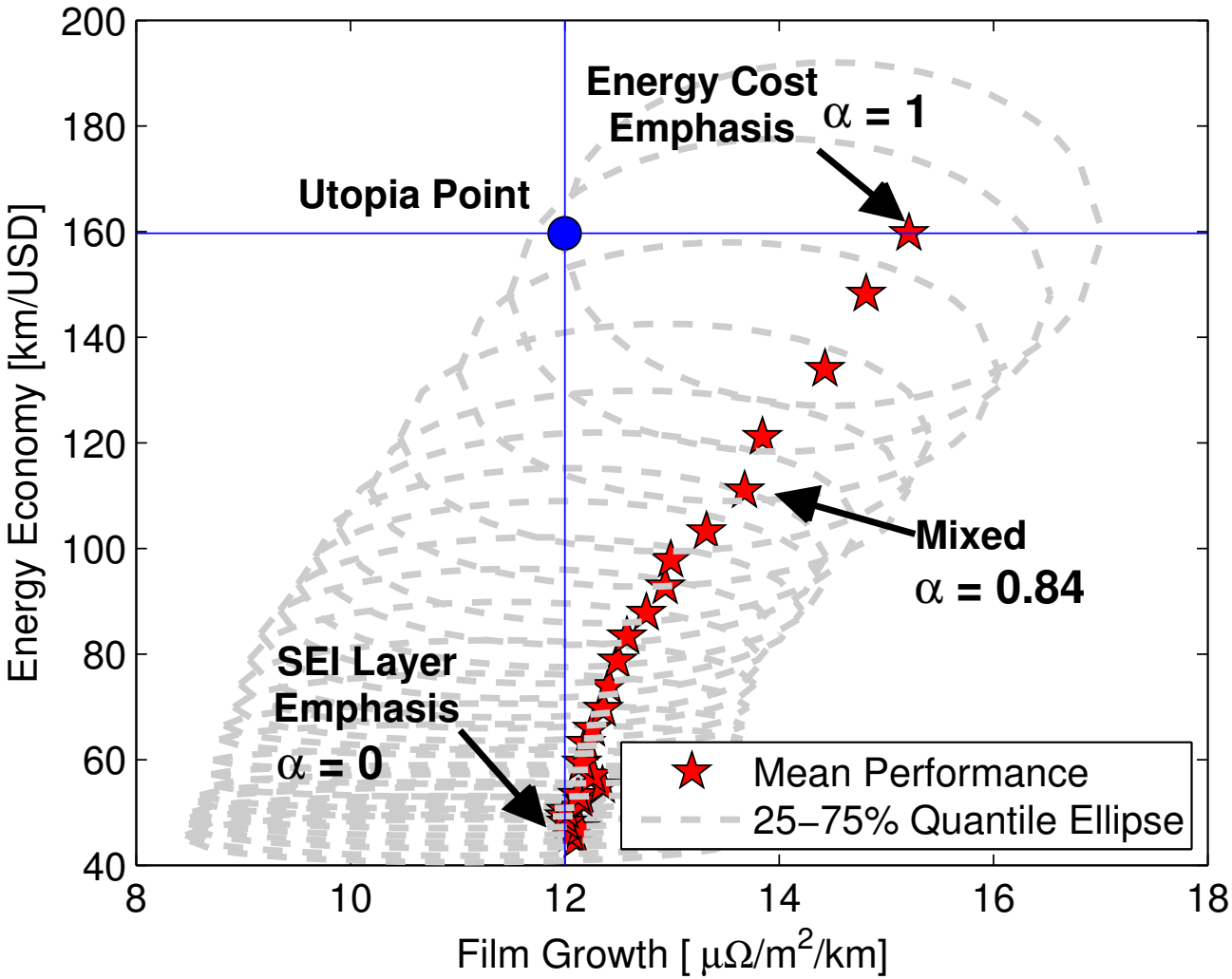
- Control Inputs
  - Engine Torque
  - M1 Torque
- State Variables
  - Engine speed
  - Vehicle speed
  - Battery SOC
  - Vehicle acceleration (Markov Chain)



Control Optimization: Minimize energy consumption cost AND battery aging

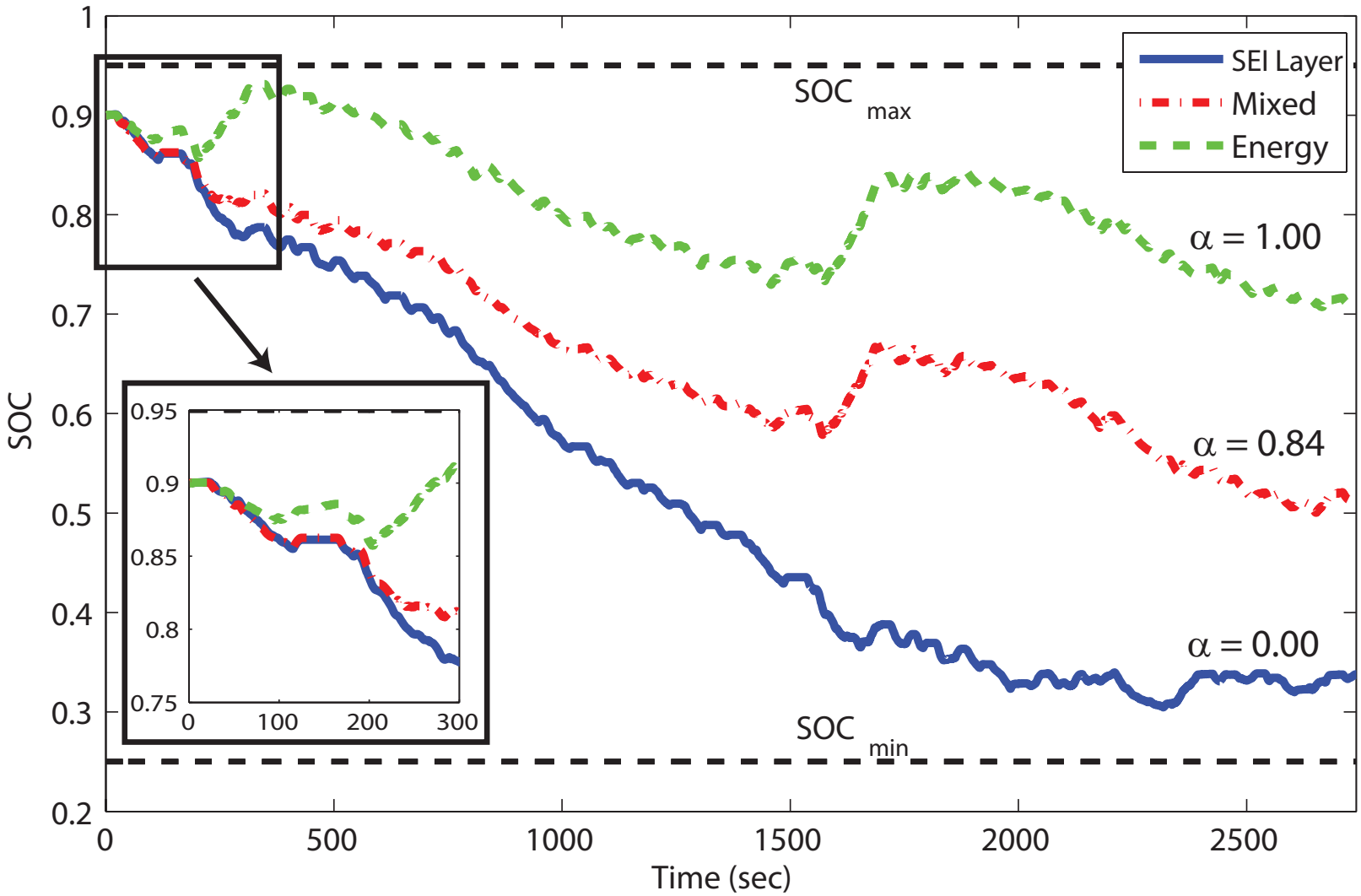
Pareto Set of Optimal Solutions

Anode-side SEI Layer Growth

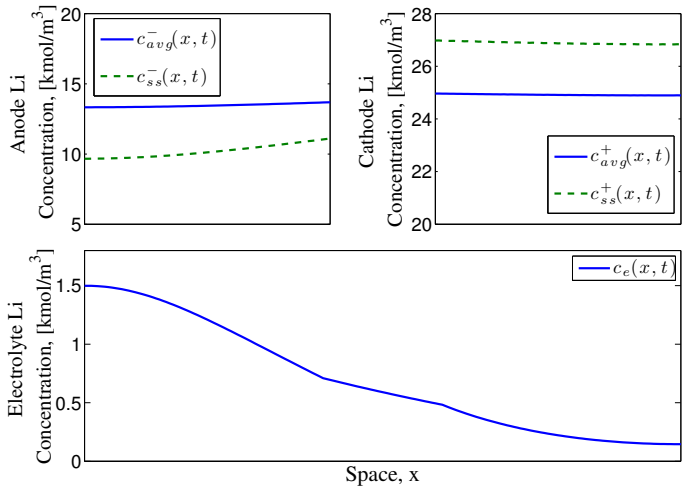


SOC Trajectories

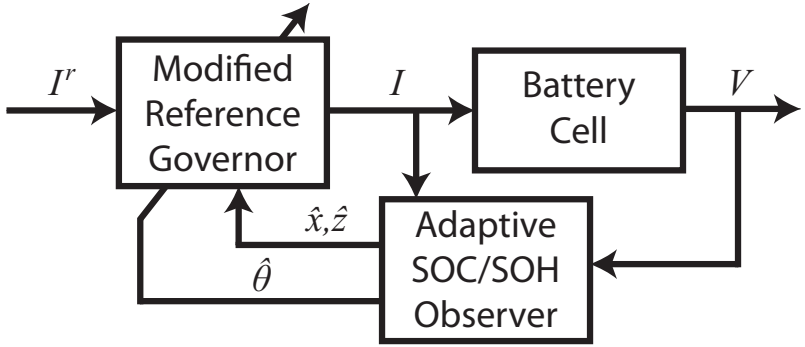
Anode-side SEI Layer Growth | UDDSx2



State Estimation w/ Electrolyte



Estimator + Reference Governor



Optimal charge/discharge

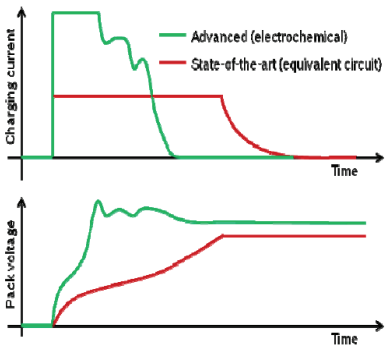


Figure 2: Charging phase of each duty cycle for BMS validation

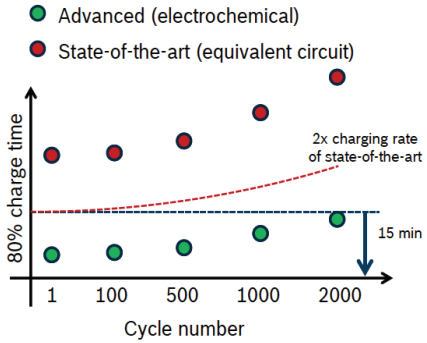
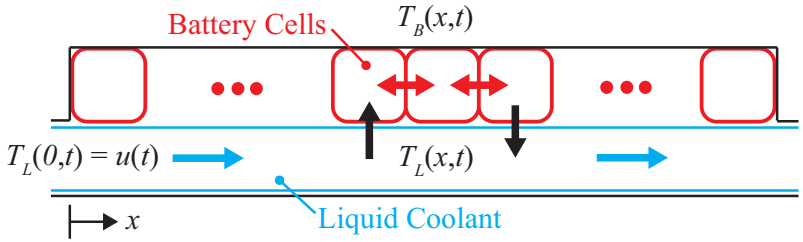


Figure 3: Comparison of charging time on a cycle to cycle basis for conventional BMS and advanced BMS

Thermal Management



Optimal Control of Distributed Parameter Systems

Models

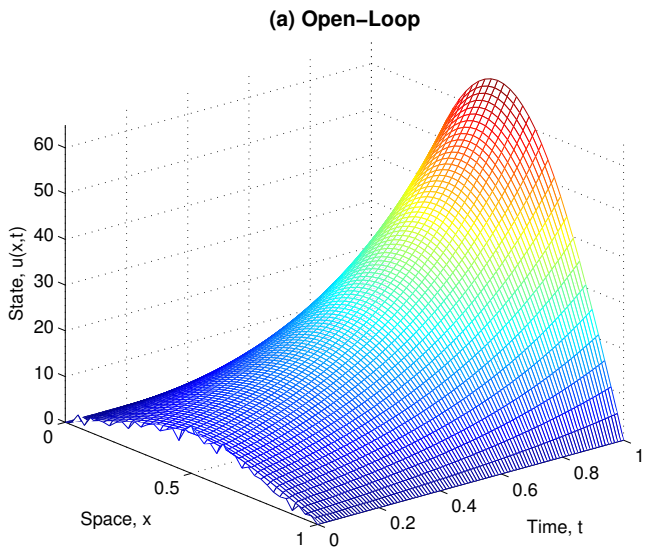
- Diffusion-Reaction-Advection
- Transport, Delays
- Waves, Beams, Nonlinear
- ...

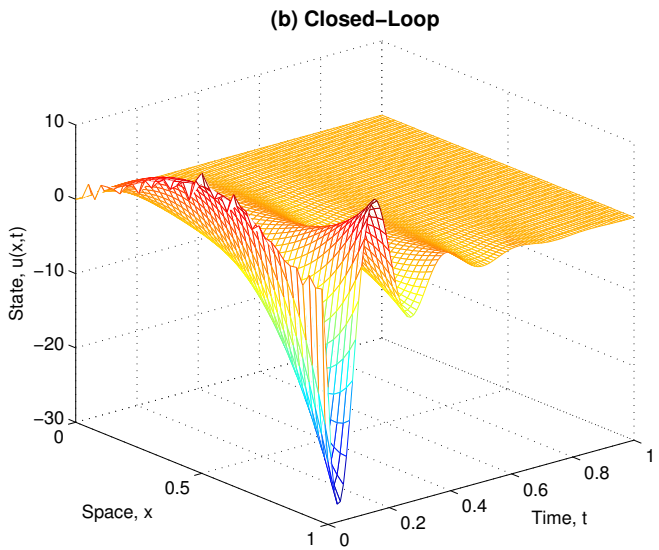
Apps

- Fluid Dynamics
- Contaminant transport
- Solar Forecasting
- Heat Transfer
- ...

Control Results

- LQR
- Reference tracking
- Estimation
- Acutator/Sensor placement
- ...





Demand Response of Aggregated Storage

Joint Work with Jan Bendsten, Aalborg University, Denmark

