Unleashing the Battery

Control Theoretic Solutions for Battery Management Systems

Scott J. Moura, Ph.D.

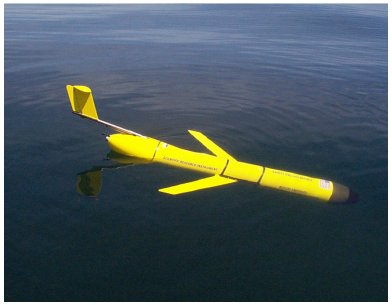
Cymer Center for Control Systems and Dynamics
Mechanical & Aerospace Engineering
UC San Diego

March 13, 2012
Princeton University

A Golden Era


ST. JUDE MEDICAL
Sylmar, CA USA
ACCENT SR RF
PM1210 SSR
ST. JUDE MEDICAL
Sylmar, CA USA
ANTHEM RF
PM3212 DDDRV





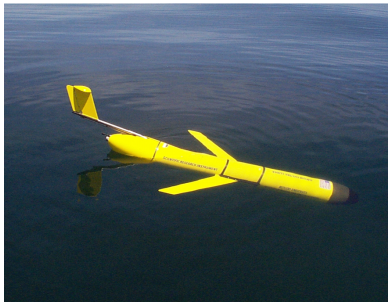



A123 SYSTEMS
2MWH-APU
HYBRID ANCILLARY POWER UNIT

A Golden Era



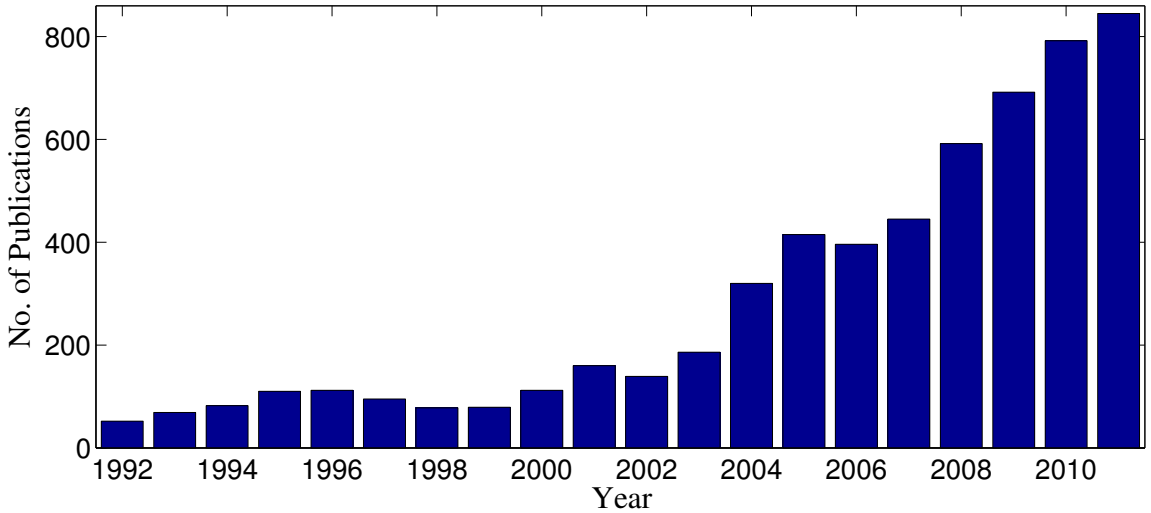








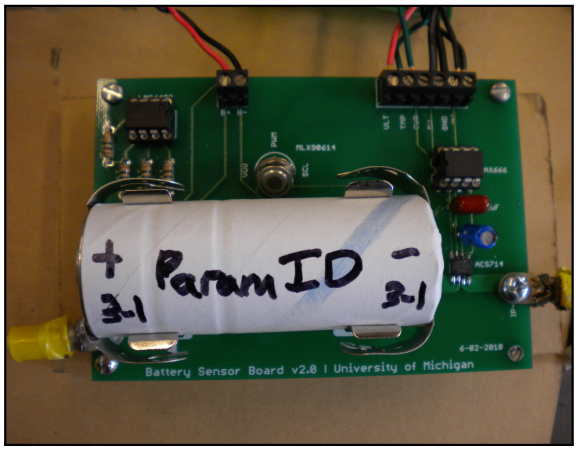
Keyword: “Battery Systems and Control”



Open Problems in Battery Systems and Control

Cell Level

- Modeling
- Design
- SOC/SOH Estimation
- ...



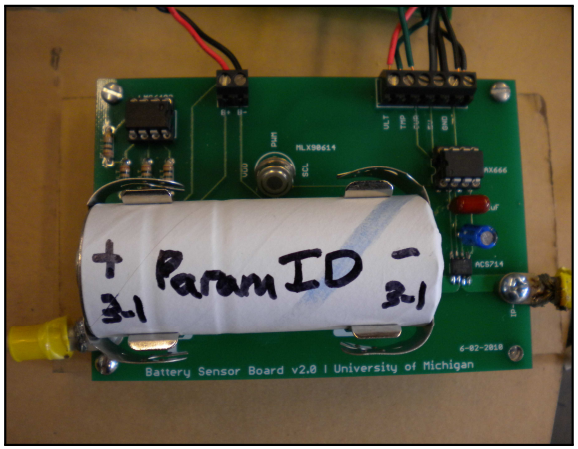
Open Problems in Battery Systems and Control

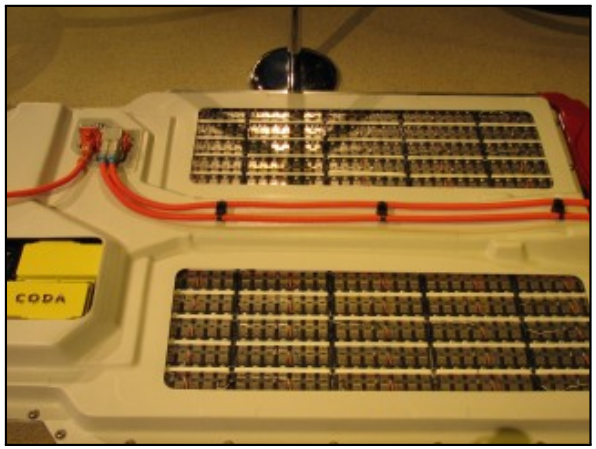
Cell Level

- Modeling
- Design
- SOC/SOH Estimation
- ...

Pack Level

- Change (Un)balancing
- Thermal Management
- Energy Management
- ...





Open Problems in Battery Systems and Control

Cell Level

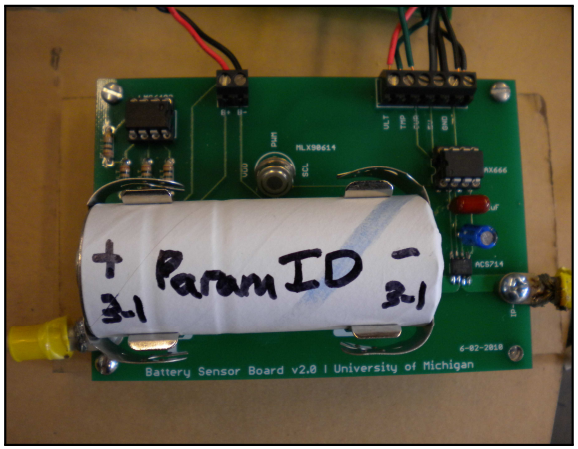
- Modeling
- Design
- SOC/SOH Estimation
- ...

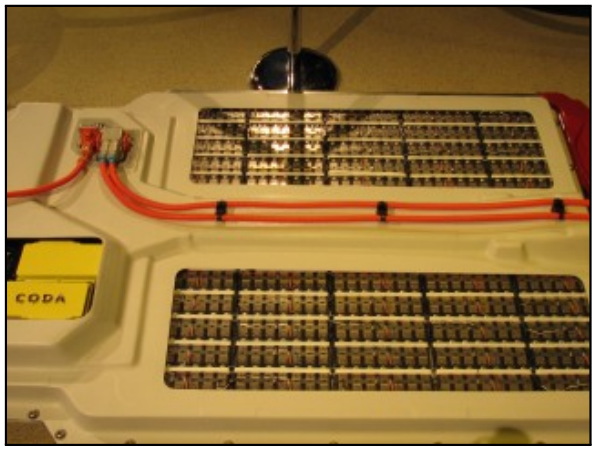
Pack Level

- Change (Un)balancing
- Thermal Management
- Energy Management
- ...

Smart-Grid Level

- Renewable Energy Integration
- Optimal Power Flow
- PEV Power Management
- ...



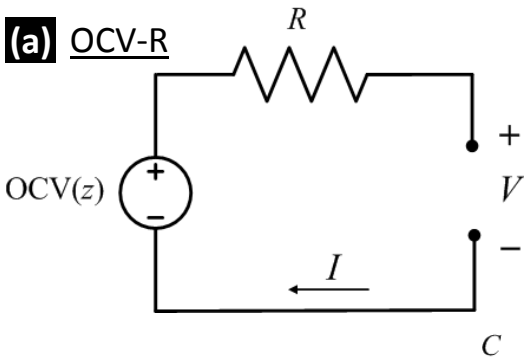




Battery Models

Equivalent Circuit Model

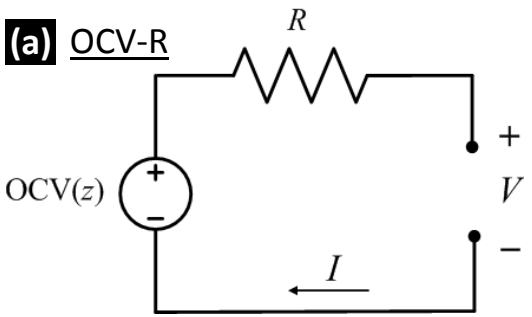
(a) OCV-R



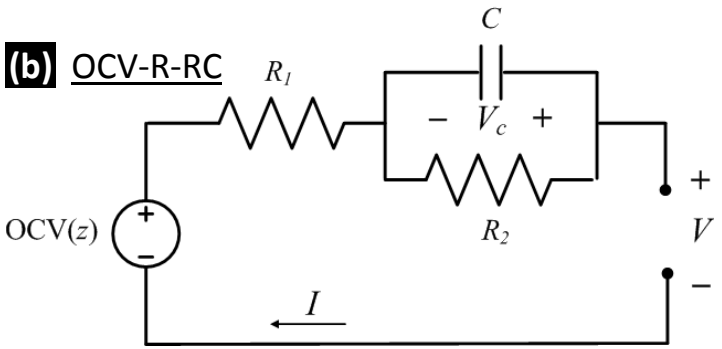
Battery Models

Equivalent Circuit Model

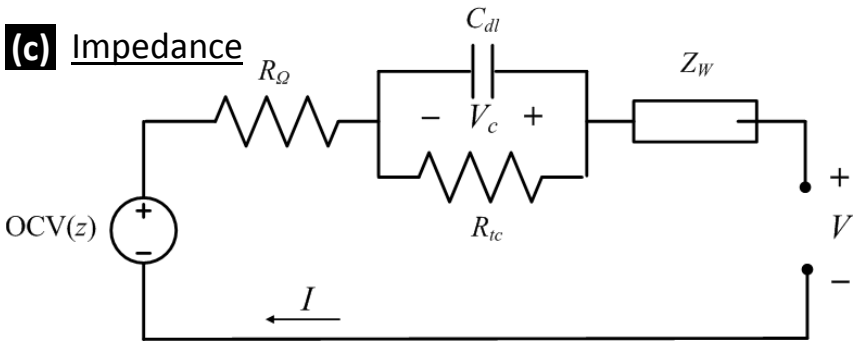
(a) OCV-R



(b) OCV-R-RC

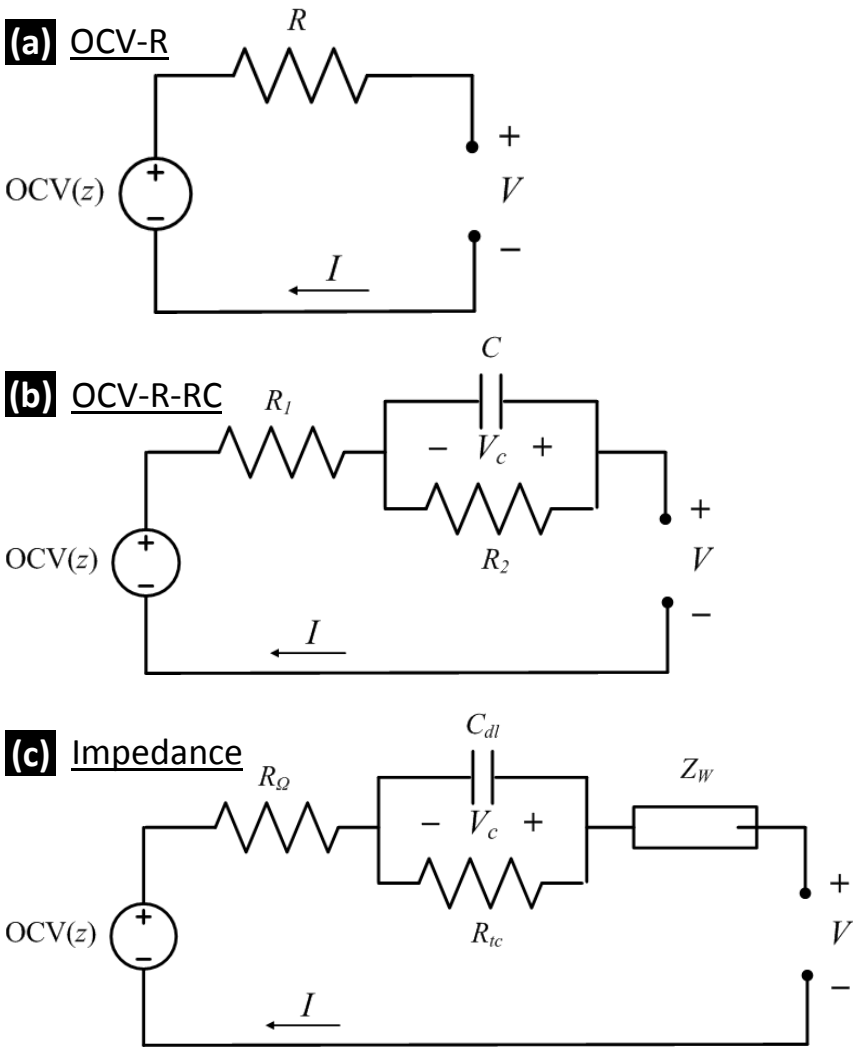


(c) Impedance

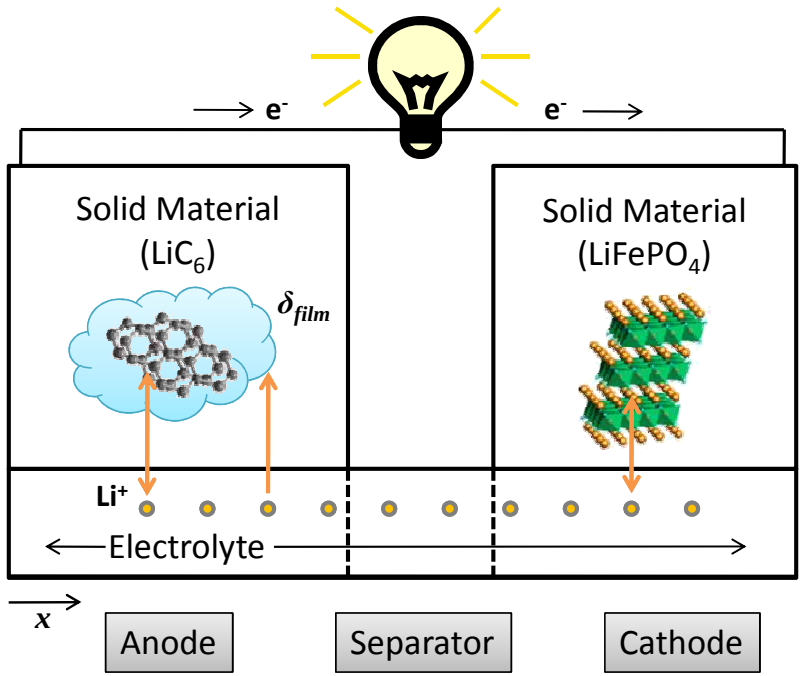


Battery Models

Equivalent Circuit Model



Electrochemical Model



Outline

1. SOC/SOH Estimation
   - Single Particle Model
   - State Estimation via PDE Backstepping
   - Parameter Identification via Adaptive & Nonlinear Control
   - Testing

2. PHEV Power Management
   - Models
   - Stochastic Optimal Control
   - Sample Results

Outline

1. SOC/SOH Estimation
   - Single Particle Model
   - State Estimation via PDE Backstepping
   - Parameter Identification via Adaptive & Nonlinear Control
   - Testing
2. PHEV Power Management
   - Models
   - Stochastic Optimal Control
   - Sample Results

A Short History

- Equivalent Circuit Model

- Electrochemical Model

A Short History

- Equivalent Circuit Model
  - G. Plett (2004) - Extended Kalman Filter (States & Params)
  - RLS, Bias-correcting RLS, EKF on Impedance-based ECMs, LPV, Neural nets, Sliding-mode, Particle filters, and many more...
- Electrochemical Model

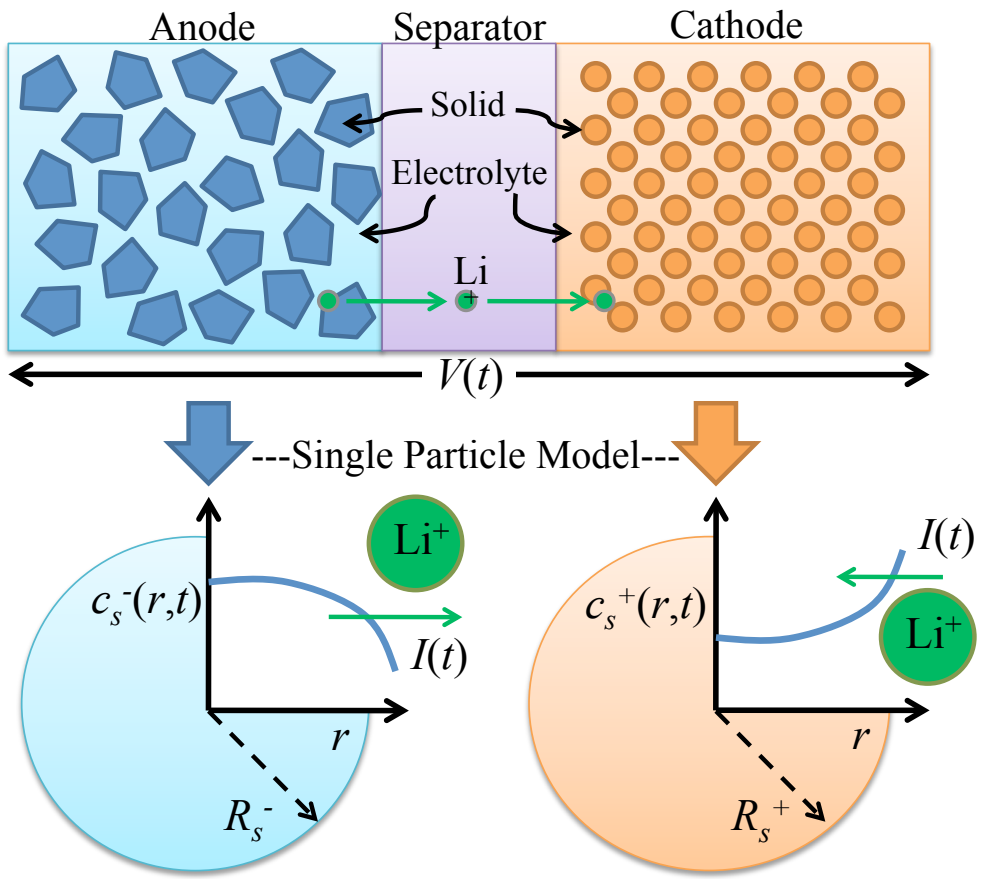
A Short History

- Equivalent Circuit Model
  - G. Plett (2004) - Extended Kalman Filter (States & Params)
  - RLS, Bias-correcting RLS, EKF on Impedance-based ECMs, LPV, Neural nets, Sliding-mode, Particle filters, and many more...
- Electrochemical Model
  - R. White (2006) - EKF on Single Particle Model (States)
  - K. Smith (2008) - KF on Reduced Freq. Domain Model (States)
  - A. Stefanopoulou (2010) - EKF on Electrode Avg Model (States)
  - R. Klein (2012) - Luenburger Observer on reduced PDE Model (States)

A Short History

- Equivalent Circuit Model
  - G. Plett (2004) - Extended Kalman Filter (States & Params)
  - RLS, Bias-correcting RLS, EKF on Impedance-based ECMs, LPV, Neural nets, Sliding-mode, Particle filters, and many more...
- Electrochemical Model
  - R. White (2006) - EKF on Single Particle Model (States)
  - K. Smith (2008) - KF on Reduced Freq. Domain Model (States)
  - A. Stefanopoulou (2010) - EKF on Electrode Avg Model (States)
  - R. Klein (2012) - Luenburger Observer on reduced PDE Model (States)
  - S. Moura (2012) - Adaptive PDE Backstepping on SPM (States & Params)

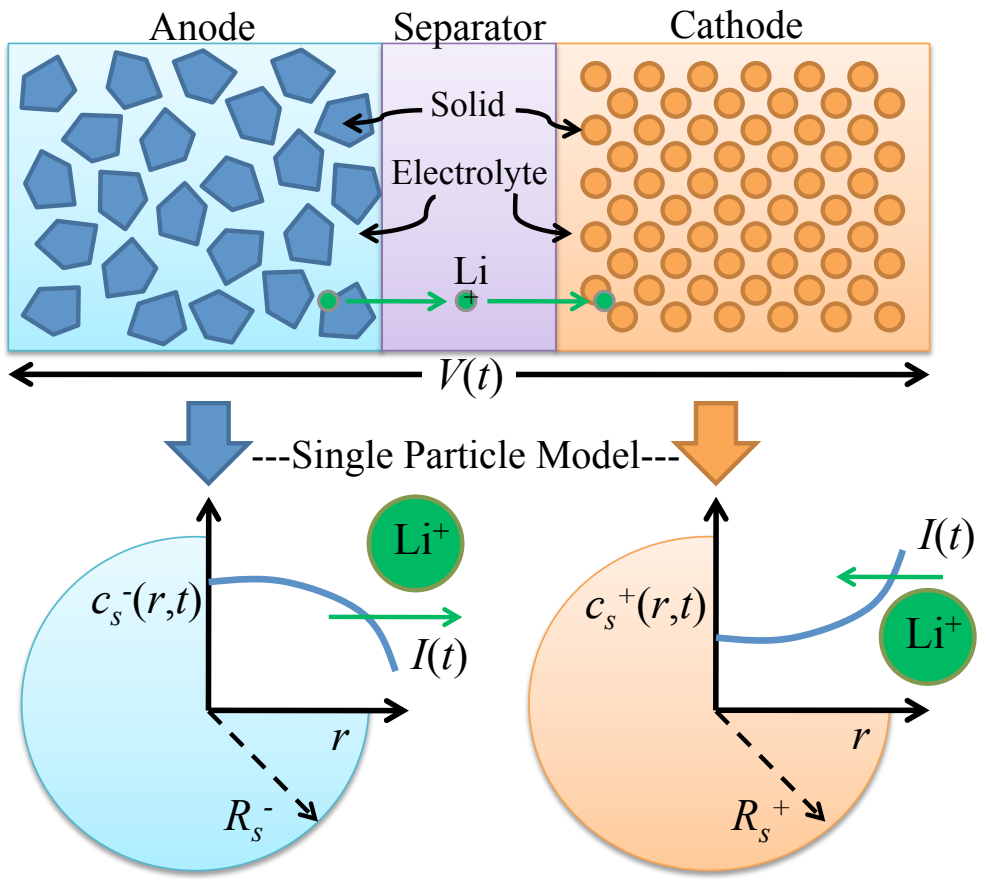
Single Particle Model (SPM)



Single Particle Model (SPM)

Mathematical Structure

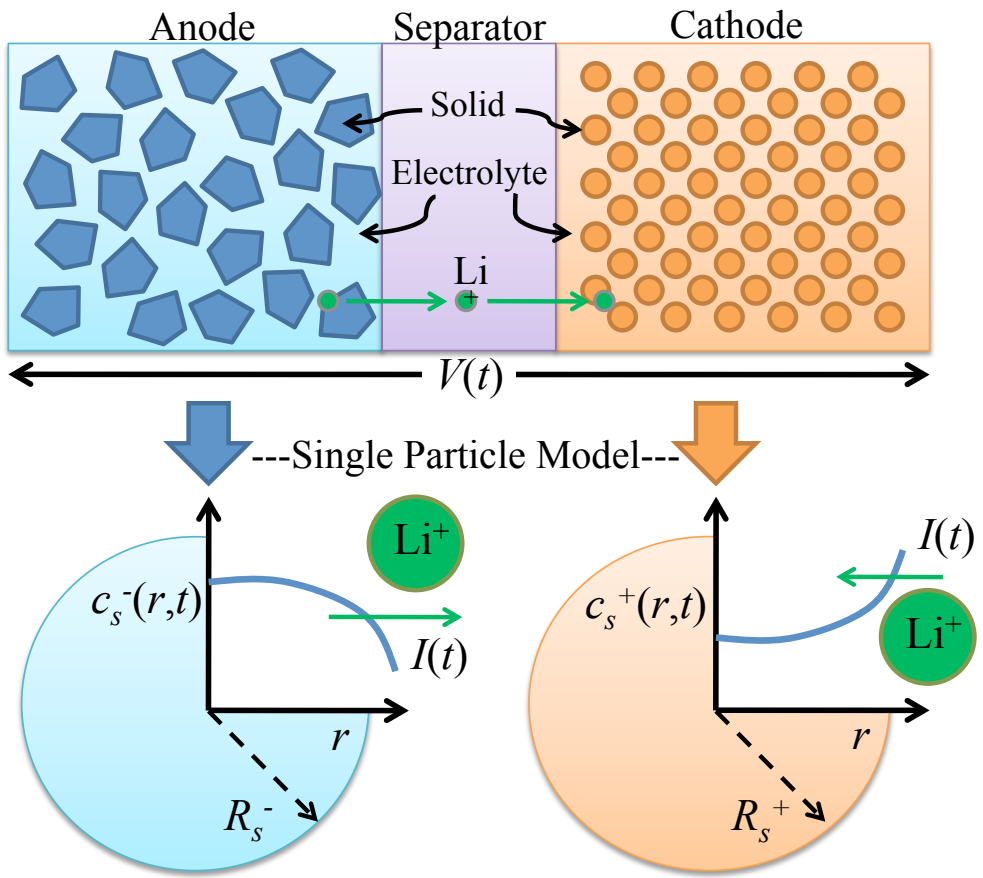
- Two spherical diffusion PDEs
  - States: $c_s^-(r,t)$, $c_s^+(r,t)$



Single Particle Model (SPM)

Mathematical Structure

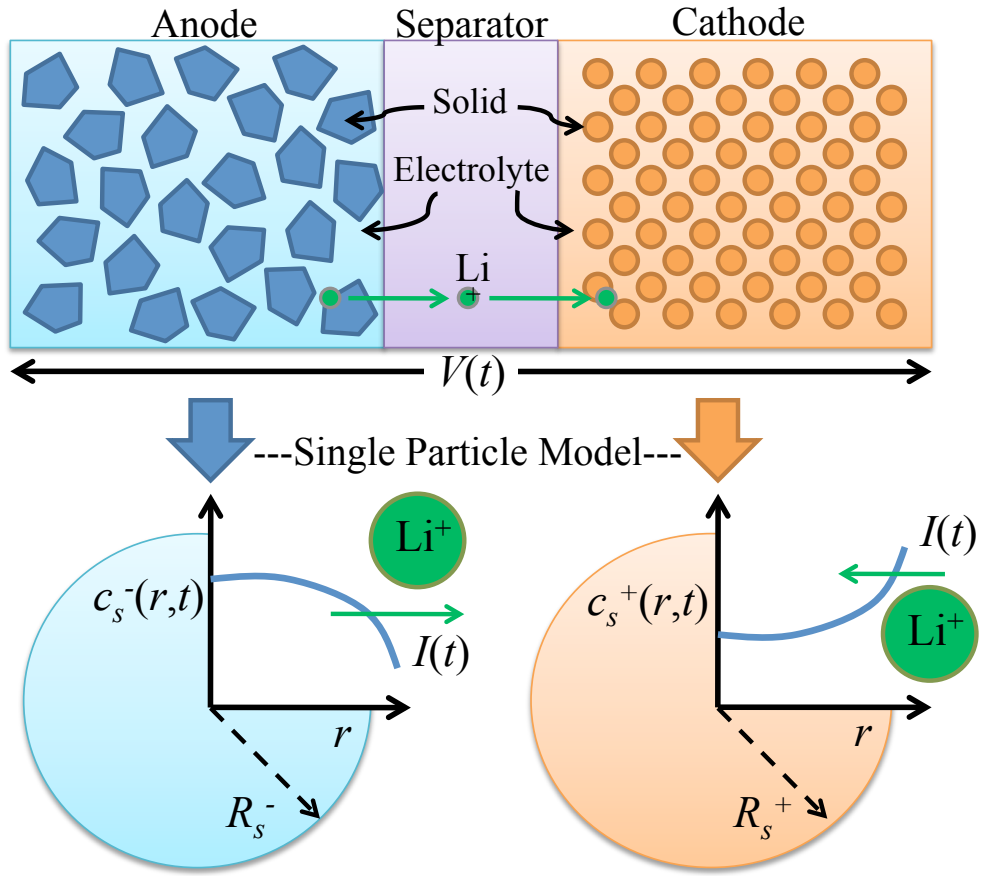
- Two spherical diffusion PDEs
  - States: $c_s^-(r,t)$, $c_s^+(r,t)$
- Neumann boundary conditions
  - Input: $I(t)$



Single Particle Model (SPM)

Mathematical Structure

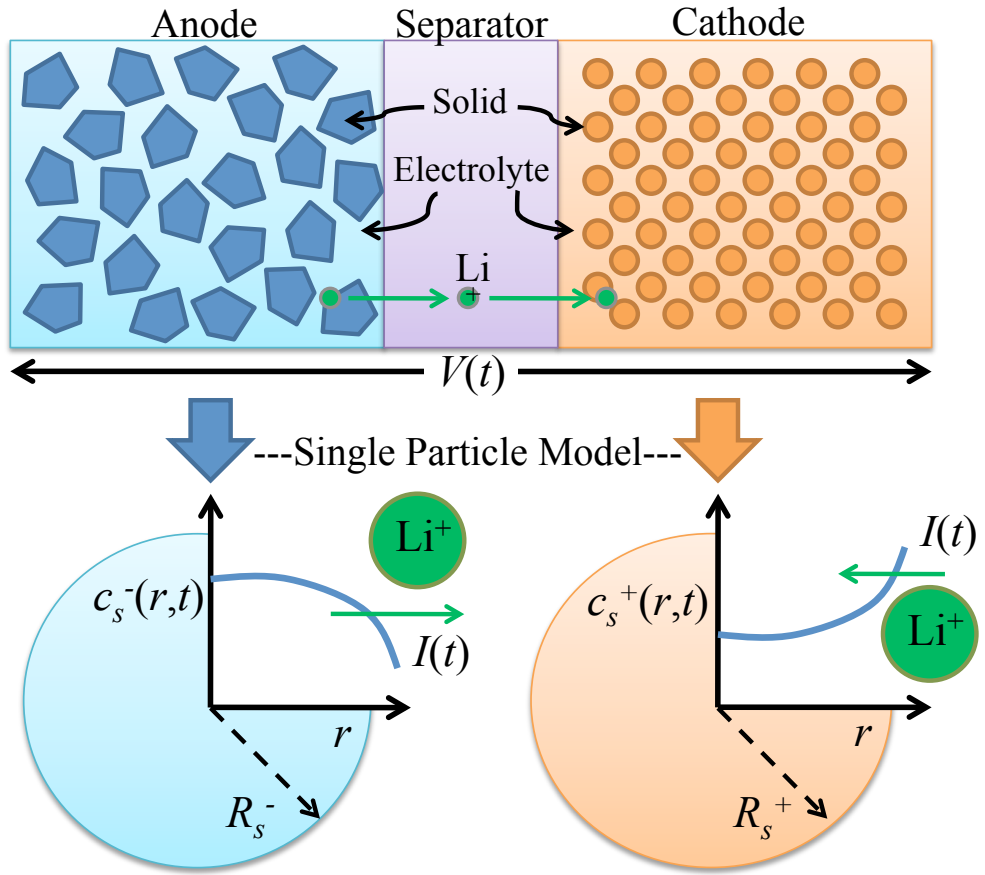
- Two spherical diffusion PDEs
  - States: $c_s^-(r,t)$, $c_s^+(r,t)$
- Neumann boundary conditions
  - Input: $I(t)$
- Nonlinear output function of PDEs' boundary values
  - Output: $V(t) = h(c_{ss}^-(t), c_{ss}^+(t), I(t))$



Single Particle Model (SPM)

Mathematical Structure

- Two spherical diffusion PDEs
  - States: $c_s^-(r,t)$, $c_s^+(r,t)$
- Neumann boundary conditions
  - Input: $I(t)$
- Nonlinear output function of PDEs' boundary values
  - Output: $V(t) = h(c_{ss}^-(t), c_{ss}^+(t), I(t))$



Definitions

- SOC: Bulk concentration SOC_{bulk}, Surface concentration $c_{ss}^-(t)$
- SOH: Physical parameters, e.g. ε, q, n_{Li}, R_f

The SOC Estimation Problem

Problem Statement

Estimate states $c_s^-(r,t), c_s^+(r,t)$ from measurements $I(t), V(t)$ and SPM

The SOC Estimation Problem

Problem Statement

Estimate states $c_s^-(r,t), c_s^+(r,t)$ from measurements $I(t), V(t)$ and SPM

Simplify the Math

- Model reduction to achieve observability
- Normalize time and space
- State transformation

The SOC Estimation Problem

Problem Statement

Estimate states $c_s^-(r,t), c_s^+(r,t)$ from measurements $I(t), V(t)$ and SPM

Simplify the Math

- Model reduction to achieve observability
- Normalize time and space
- State transformation

Observer Model Equations

$$\frac{\partial c}{\partial t}(r,t) = \varepsilon \frac{\partial^2 c}{\partial r^2}(r,t) \qquad \text{Heat PDE}$$

$$c(0,t) = 0$$

$$\frac{\partial c}{\partial r}(1,t) - c(1,t) = -q\rho I(t)$$

$$\text{Measurement} = c(1,t)$$

Backstepping PDE Estimator

Estimator

$$
\begin{aligned}
\frac{\partial \hat{c}}{\partial t}(r,t) &= \varepsilon \frac{\partial^2 \hat{c}}{\partial r^2}(r,t) + p_1(r)\tilde{c}(1,t) \\
\hat{c}(0,t) &= 0 \\
\frac{\partial \hat{c}}{\partial r}(1,t) - \hat{c}(1,t) &= -q\rho I(t) + p_{10}\tilde{c}(1,t) \\
\tilde{c}(1,t) &= c(1,t) - \hat{c}(1,t)
\end{aligned}
$$

Backstepping PDE Estimator

Estimator

$$\begin{aligned}
\frac{\partial \hat{c}}{\partial t}(r,t) &= \varepsilon \frac{\partial^2 \hat{c}}{\partial r^2}(r,t) + p_1(r)\tilde{c}(1,t) \\
\hat{c}(0,t) &= 0 \\
\frac{\partial \hat{c}}{\partial r}(1,t) - \hat{c}(1,t) &= -q\rho I(t) + p_{10}\tilde{c}(1,t) \\
\tilde{c}(1,t) &= c(1,t) - \hat{c}(1,t)
\end{aligned}$$

Estimation Error Dynamics: $\tilde{c}(r,t) = c(r,t) - \hat{c}(r,t)$

$$\begin{aligned}
\frac{\partial \tilde{c}}{\partial t}(r,t) &= \varepsilon \frac{\partial^2 \tilde{c}}{\partial r^2}(r,t) - p_1(r)\tilde{c}(1,t) \\
\tilde{c}(0,t) &= 0 \\
\frac{\partial \tilde{c}}{\partial r}(1,t) - \tilde{c}(1,t) &= -p_{10}\tilde{c}(1,t)
\end{aligned}$$

Backstepping PDE Estimator

Estimator

$$\begin{aligned}
\frac{\partial \hat{c}}{\partial t}(r,t) &= \varepsilon \frac{\partial^2 \hat{c}}{\partial r^2}(r,t) + p_1(r)\tilde{c}(1,t) \\
\hat{c}(0,t) &= 0 \\
\frac{\partial \hat{c}}{\partial r}(1,t) - \hat{c}(1,t) &= -q\rho I(t) + p_{10}\tilde{c}(1,t) \\
\tilde{c}(1,t) &= c(1,t) - \hat{c}(1,t)
\end{aligned}$$

The Backstepping Idea

$$\tilde{c}(r,t) = \tilde{w}(r,t) - \int_r^1 p(r,s)\tilde{w}(s)ds$$ Backstepping Transformation

$$\frac{\partial \tilde{w}}{\partial t}(r,t) = \varepsilon \frac{\partial^2 \tilde{w}}{\partial r^2}(r,t) + \lambda \tilde{w}(r,t)$$

$$\tilde{w}(0,t) = 0$$ Exp. Stable Target System

$$\frac{\partial \tilde{w}}{\partial r}(1,t) = \frac{1}{2}\tilde{w}(1,t)$$

$$W = \int_0^1 \tilde{w}^2(x,t)dx$$

Backstepping PDE Estimator

Estimator

$$\begin{aligned}
\frac{\partial \hat{c}}{\partial t}(r,t) &= \varepsilon \frac{\partial^2 \hat{c}}{\partial r^2}(r,t) + p_1(r)\tilde{c}(1,t) \\
\hat{c}(0,t) &= 0 \\
\frac{\partial \hat{c}}{\partial r}(1,t) - \hat{c}(1,t) &= -q\rho I(t) + p_{10}\tilde{c}(1,t) \\
\tilde{c}(1,t) &= c(1,t) - \hat{c}(1,t)
\end{aligned}$$

Kernel PDE

$$p_{rr}(r,s) - p_{ss}(r,s) = \frac{\lambda}{\varepsilon} p(r,s) \qquad p_1(r) = -p_s(r,1) - \frac{1}{2}p(r,1)$$

$$p(0,s) = 0 \qquad p_{10} = \frac{3 - \lambda/\varepsilon}{2}$$

$$p(r,r) = \frac{\lambda}{2\varepsilon} r$$

Backstepping PDE Estimator

Estimator

$$\begin{aligned}
\frac{\partial \hat{c}}{\partial t}(r,t) &= \varepsilon \frac{\partial^2 \hat{c}}{\partial r^2}(r,t) + p_1(r)\tilde{c}(1,t) \\
\hat{c}(0,t) &= 0 \\
\frac{\partial \hat{c}}{\partial r}(1,t) - \hat{c}(1,t) &= -q\rho I(t) + p_{10}\tilde{c}(1,t) \\
\tilde{c}(1,t) &= c(1,t) - \hat{c}(1,t)
\end{aligned}$$

Explicit Solution to Estimator Gains

$$p_1(r) = \frac{-\lambda r}{2\varepsilon z}\left[I_1(z) - \frac{2\lambda}{\varepsilon z} I_2(z)\right] \qquad \text{where} \quad z = \sqrt{\frac{\lambda}{\varepsilon}(r^2-1)}$$

$$p_{10} = \frac{1}{2}\left(3 - \frac{\lambda}{\varepsilon}\right)$$

The SOH Estimation Problem

Problem Statement

Estimate physical parameters from measurements $I(t), V(t)$ and SPM

The SOH Estimation Problem

Problem Statement

Estimate physical parameters from measurements $I(t), V(t)$ and SPM

Relate uncertain parameters to SOH-related concepts

- Capacity fade
- Power fade

The SOH Estimation Problem

Problem Statement

Estimate physical parameters from measurements $I(t), V(t)$ and SPM

Relate uncertain parameters to SOH-related concepts

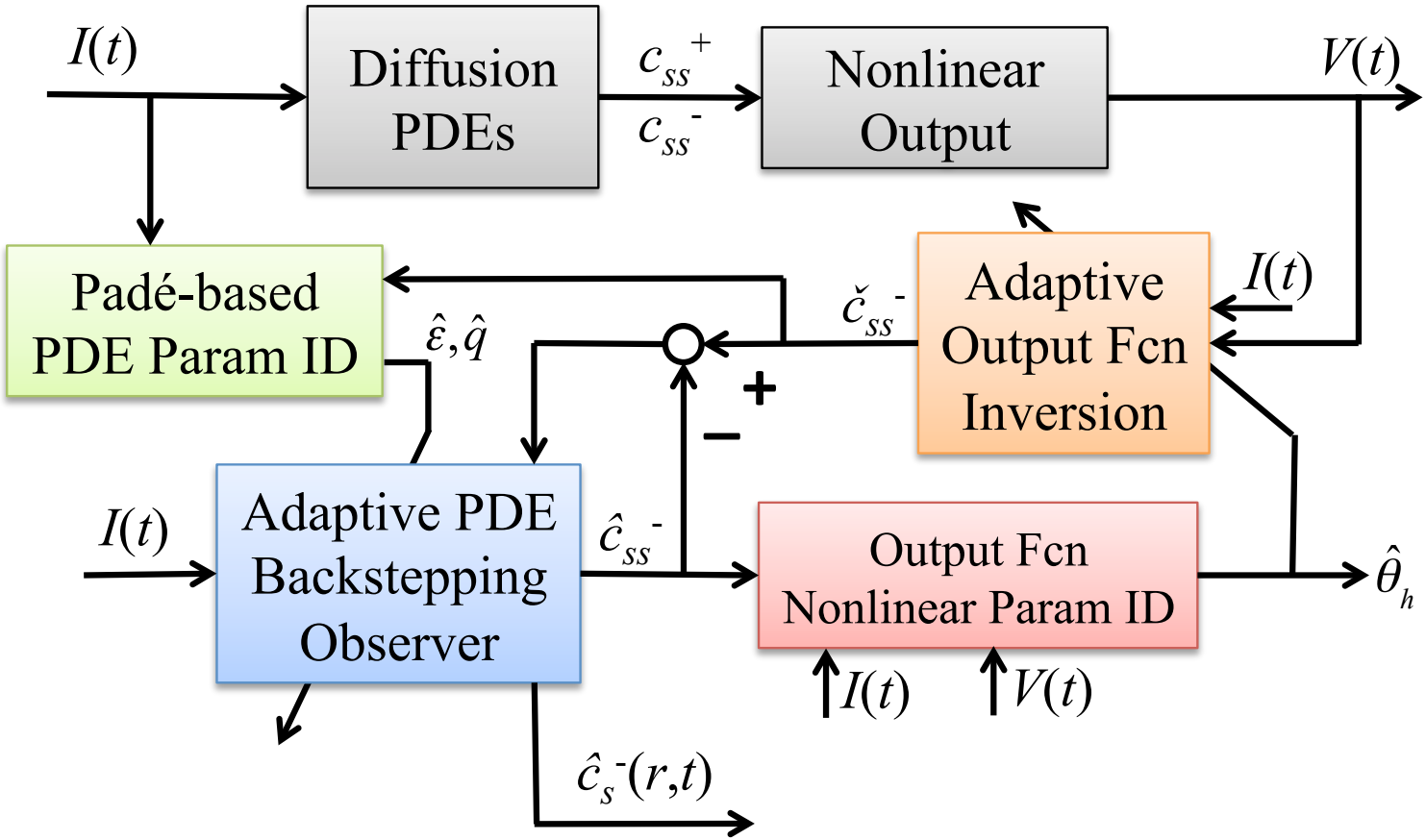
- Capacity fade
- Power fade

Technical Challenges

- PDE models
- Nonlinear in parameters

Adaptive Observer

Combined State & Parameter Estimation



Padé-based PDE Parameter Identification

PDE Model

$$\frac{\partial c}{\partial t}(r,t) = \varepsilon \frac{\partial^2 c}{\partial r^2}(r,t)$$

$$c(0,t) = 0$$

$$\frac{\partial c}{\partial r}(1,t) - c(1,t) = -q\rho I(t)$$

Padé-based PDE Parameter Identification

PDE Model

$$\frac{\partial c}{\partial t}(r,t) = \varepsilon \frac{\partial^2 c}{\partial r^2}(r,t)$$

$$c(0,t) = 0$$

$$\frac{\partial c}{\partial r}(1,t) - c(1,t) = -q\rho I(t)$$

Challenge for adaptive observers:

- Cannot re-express model such that ε multiplies measured signals

Padé-based PDE Parameter Identification

PDE Model

$$\frac{\partial c}{\partial t}(r,t) = \varepsilon \frac{\partial^2 c}{\partial r^2}(r,t)$$

$$c(0,t) = 0$$

$$\frac{\partial c}{\partial r}(1,t) - c(1,t) = -q\rho I(t)$$

Challenge for adaptive observers:

- Cannot re-express model such that ε multiplies measured signals

Main Idea:

- Approximate PDE transfer function via Padé representation

$$\frac{c_{ss}(s)}{I(s)} = \frac{-q\rho \sinh\left(\sqrt{\frac{s}{\varepsilon}}\right)}{\left(\sqrt{\frac{s}{\varepsilon}}\right)\cosh\left(\sqrt{\frac{s}{\varepsilon}}\right) - \sinh\left(\sqrt{\frac{s}{\varepsilon}}\right)} \approx \frac{-3\rho q\varepsilon^2 - \frac{2}{7}\rho q\varepsilon s}{\varepsilon s + \frac{1}{35}s^2}$$

Padé-based PDE Parameter Identification

PDE Model

$$\frac{\partial c}{\partial t}(r,t) = \varepsilon \frac{\partial^2 c}{\partial r^2}(r,t)$$

$$c(0,t) = 0$$

$$\frac{\partial c}{\partial r}(1,t) - c(1,t) = -q\rho I(t)$$

Challenge for adaptive observers:

- Cannot re-express model such that ε multiplies measured signals

Main Idea:

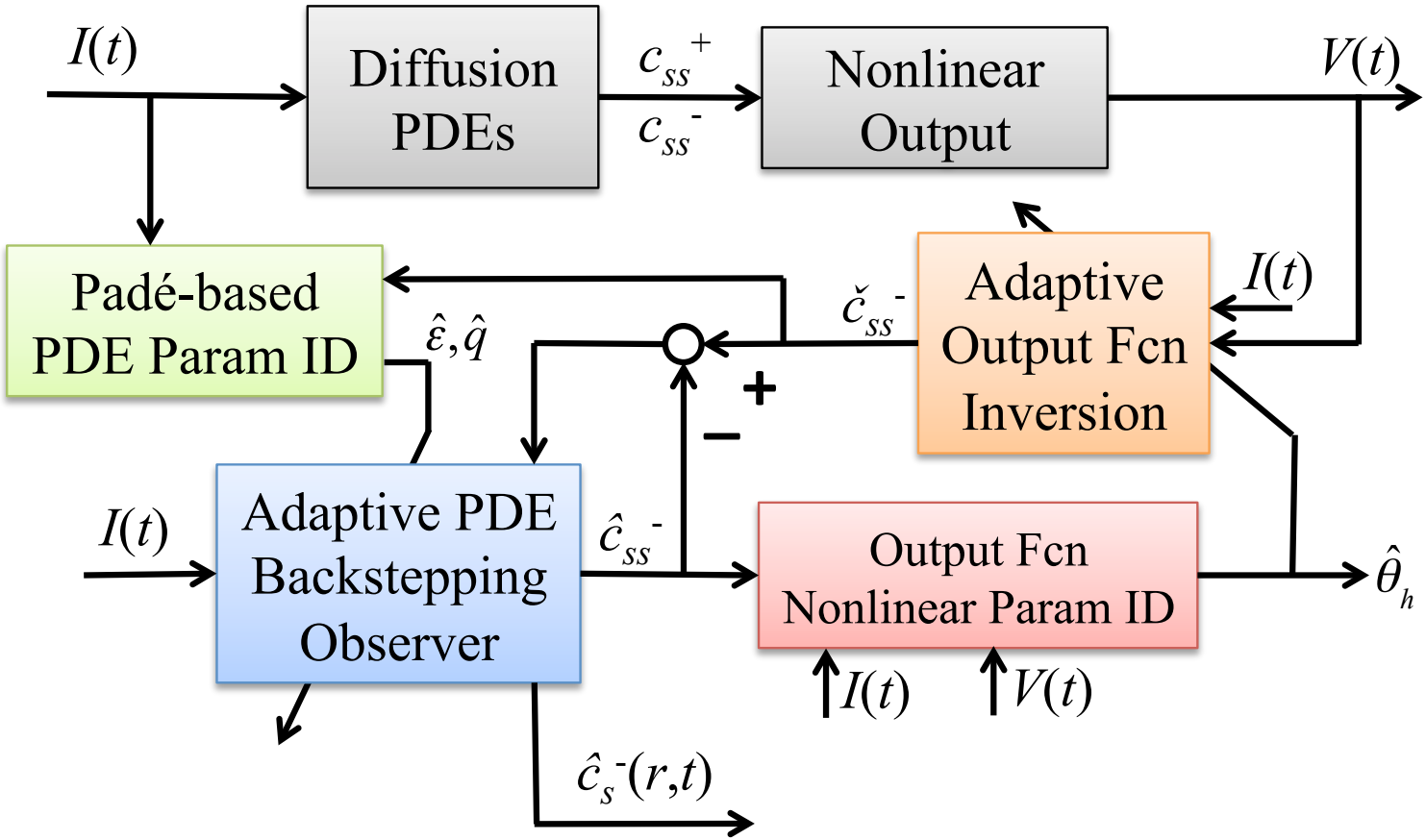
- Approximate PDE transfer function via Padé representation

$$\frac{c_{ss}(s)}{I(s)} = \frac{-q\rho \sinh\left(\sqrt{\frac{s}{\varepsilon}}\right)}{\left(\sqrt{\frac{s}{\varepsilon}}\right)\cosh\left(\sqrt{\frac{s}{\varepsilon}}\right) - \sinh\left(\sqrt{\frac{s}{\varepsilon}}\right)} \approx \frac{-3\rho q\varepsilon^2 - \frac{2}{7}\rho q\varepsilon s}{\varepsilon s + \frac{1}{35}s^2}$$

Enables the application of standard (e.g. least squares) parameter identification tools applied to vector $\theta_{pde} = [\varepsilon, q\varepsilon, q\varepsilon^2]^T$

Adaptive Observer

Combined State & Parameter Estimation



Output Function Nonlinear Parameter ID

Nonlinearly Parameterized Output

$$V(t) = h(c_{ss}^{-}(t), I(t); \theta)$$

- θ contains many parameters
- Linear dependence between parameters?

Output Function Nonlinear Parameter ID

Nonlinearly Parameterized Output

$$V(t) = h(c_{ss}^{-}(t), I(t); \theta)$$

- θ contains many parameters
- Linear dependence between parameters?

Identifiability Analysis Result

- Linearly independent parameter subset : $\theta_h = [n_{Li}, R_f]^T$
  - n_{Li} : Total amount of cyclable Li (Capacity Fade)
  - R_f : Resistance of current collectors, electrolyte, etc. (Power Fade)

Output Function Nonlinear Parameter ID

Nonlinearly Parameterized Output

$$V(t) = h(c_{ss}^{-}(t), I(t); \theta)$$

- θ contains many parameters
- Linear dependence between parameters?

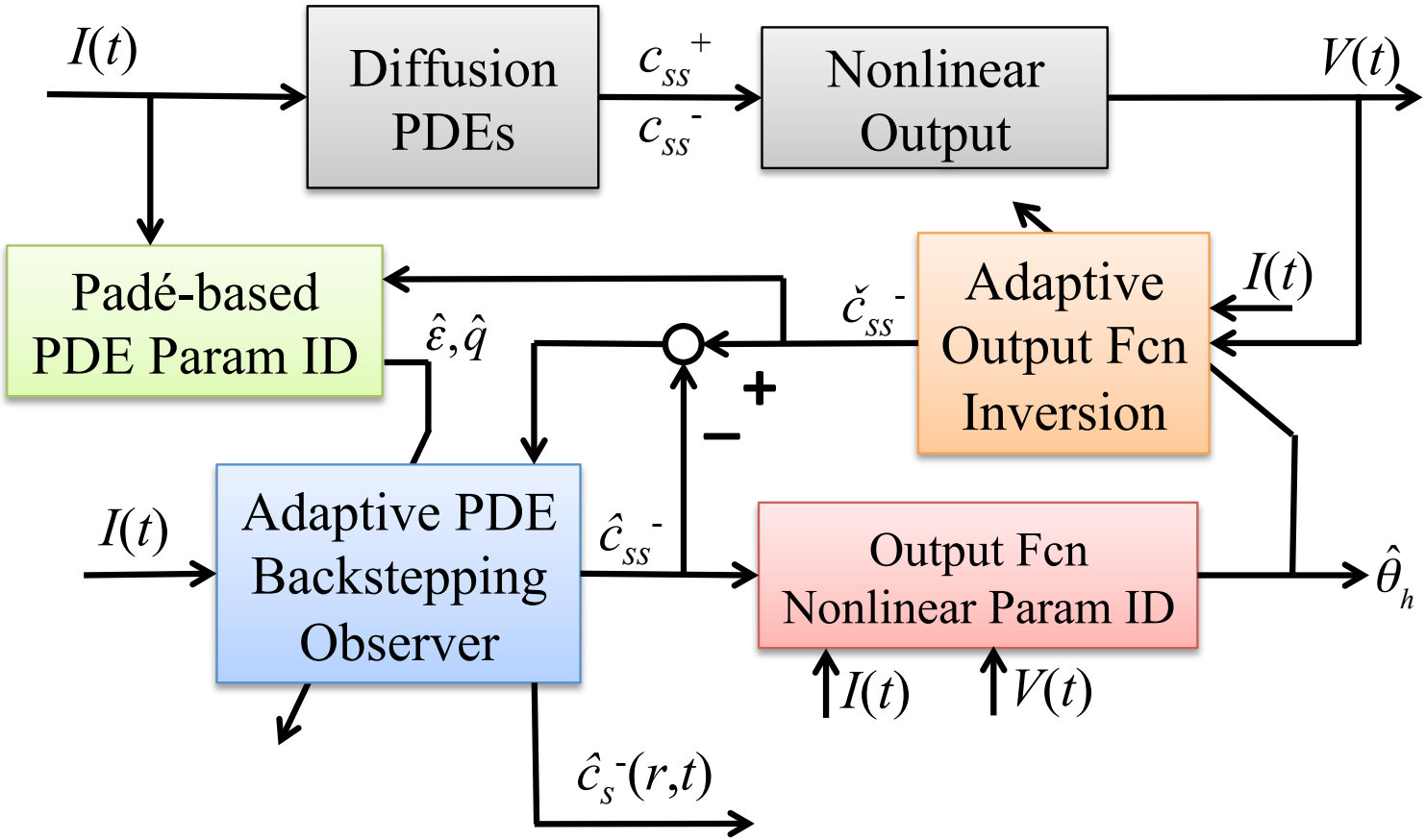
Identifiability Analysis Result

- Linearly independent parameter subset : $\theta_h = [n_{Li}, R_f]^T$
  - n_{Li} : Total amount of cyclable Li (Capacity Fade)
  - R_f : Resistance of current collectors, electrolyte, etc. (Power Fade)

Enables the application of nonlinear least squares parameter identification tools applied to vector θ_h

Adaptive Observer

Combined State & Parameter Estimation



Adaptive Output Function Inversion

Recall state observer requires boundary value $c_{ss}^{-}(t)$ for output error injection

Adaptive Output Function Inversion

Recall state observer requires boundary value $c_{ss}^{-}(t)$ for output error injection

Nonlinear Function Inversion

Solve $g(c_{ss}^{-}, t) = 0$ for c_{ss}^{-}, where

$$g(c_{ss}^{-}, t) = h(c_{ss}^{-}(t), I(t); \hat{\theta}_h) - V(t)$$

Adaptive Output Function Inversion

Recall state observer requires boundary value $c_{ss}^{-}(t)$ for output error injection

Nonlinear Function Inversion

Solve $g(c_{ss}^{-}, t) = 0$ for c_{ss}^{-}, where

$$g(c_{ss}^{-}, t) = h(c_{ss}^{-}(t), I(t); \hat{\theta}_h) - V(t)$$

Newton's Method

Main Idea: Construct ODE with exp. stable equilibrium $g(c_{ss}^{-}, t) = 0$

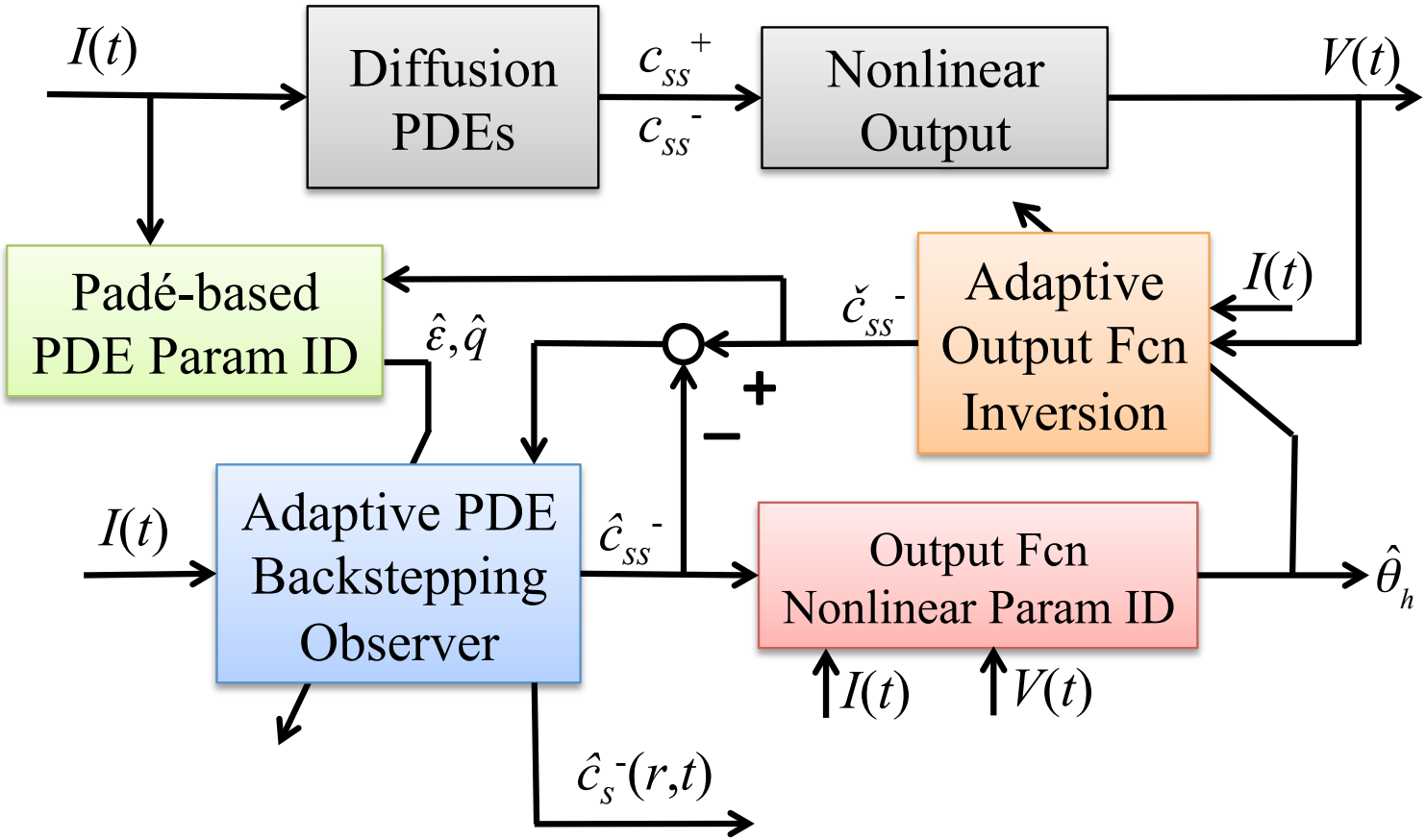
$$\frac{d}{dt}\left[g(\check{c}_{ss}^{-}, t)\right] = -\gamma g(\check{c}_{ss}^{-}, t)$$

which expands to a Newton's method update law:

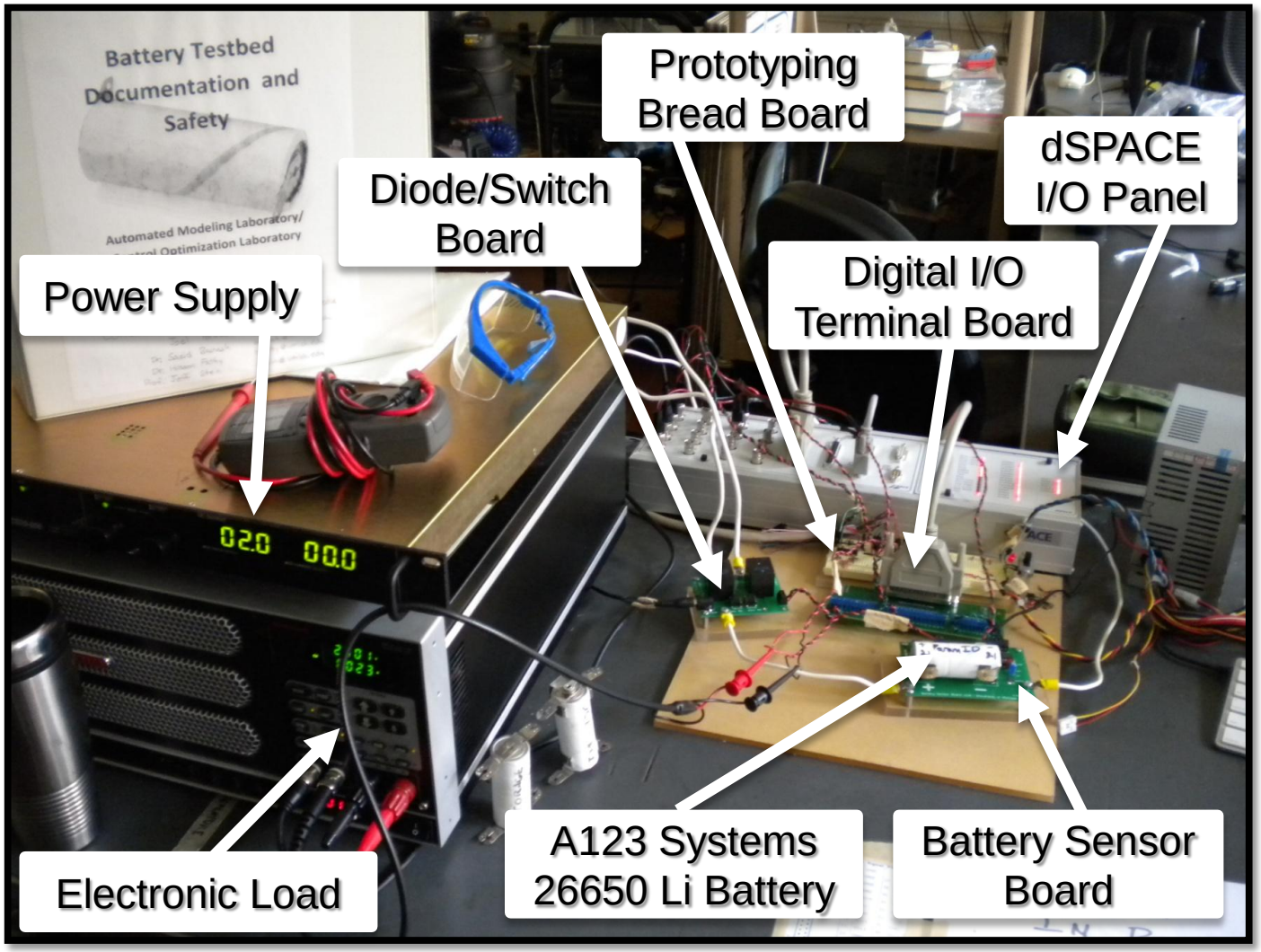
$$\frac{d}{dt}\check{c}_{ss}^{-} = -\frac{\gamma g(\check{c}_{ss}^{-}, t) + \frac{\partial g}{\partial t}(\check{c}_{ss}^{-}, t)}{\frac{\partial g}{\partial c_{ss}^{-}}(\check{c}_{ss}^{-}, t)}$$

Adaptive Observer

Combined State & Parameter Estimation

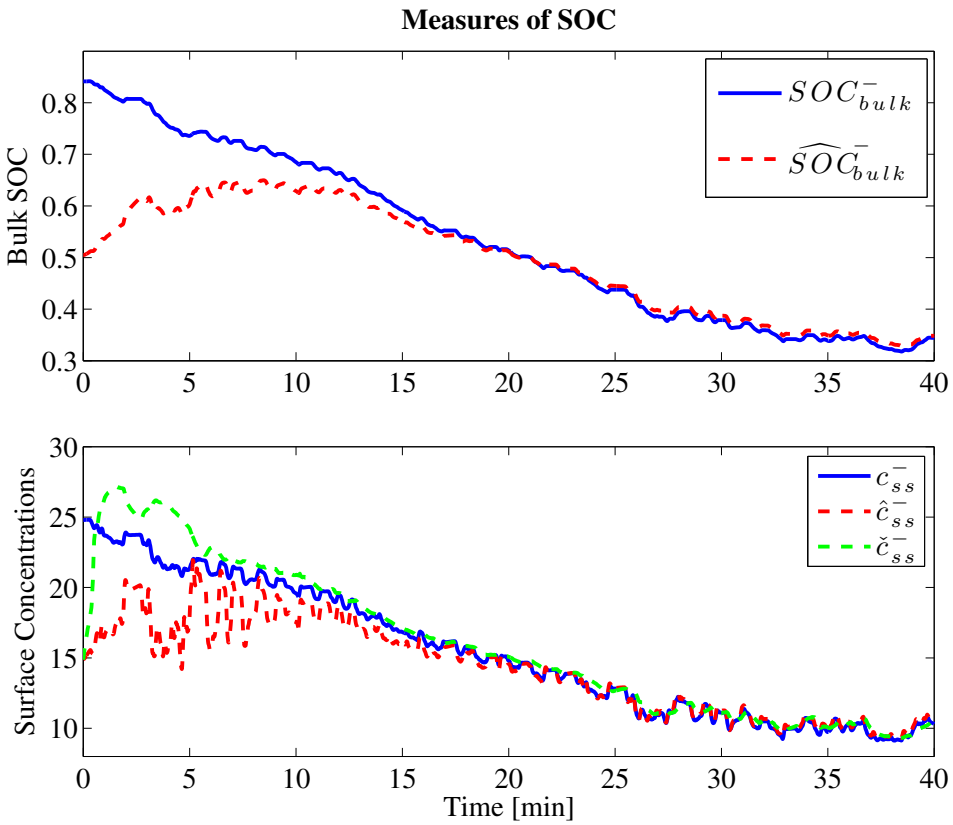


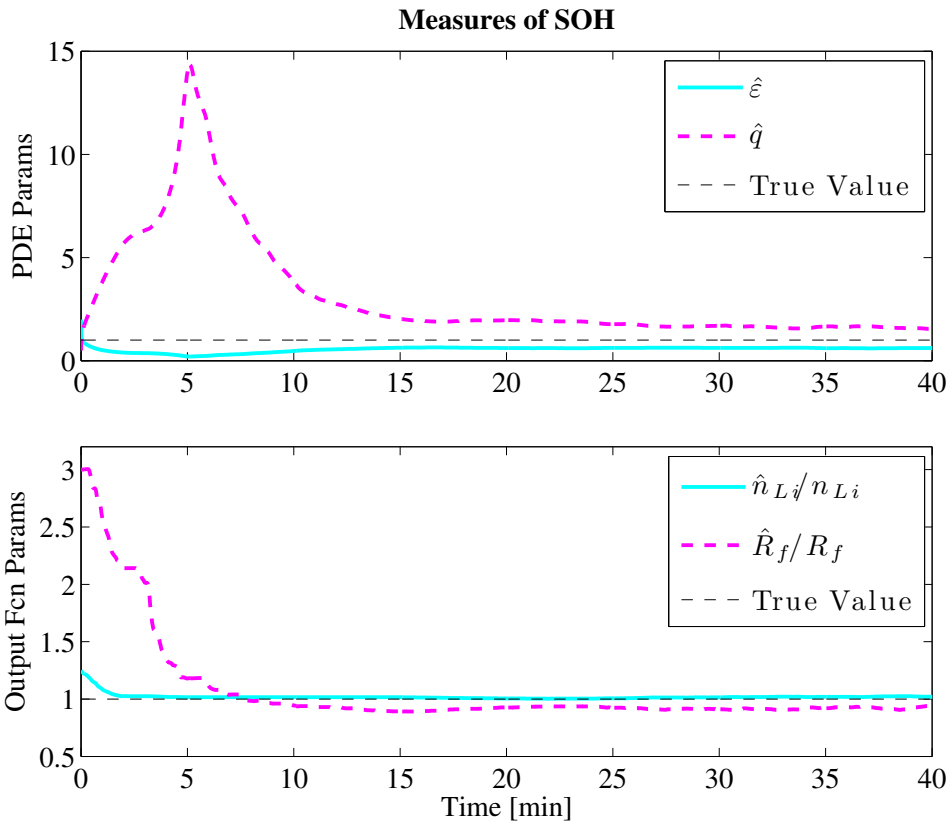
Custom Battery-in-the-Loop Testbed



Results

UDDS Drive Cycle Input





Outline

1. SOC/SOH Estimation
   - Single Particle Model
   - State Estimation via PDE Backstepping
   - Parameter Identification via Adaptive & Nonlinear Control
   - Testing

2. PHEV Power Management
   - Models
   - Stochastic Optimal Control
   - Sample Results

PHEV Power Management

Problem Statement

Design a supervisory control algorithm for plug-in hybrid electric vehicles (PHEVs) that splits engine and battery power in some optimal sense.



J. Voelcker, "Plugging Away in a Prius," *IEEE Spectrum*, vol. 45, pp. 30-48, 2008.



A Short History

- Heuristic algorithms

A Short History

- Heuristic algorithms
- Rizzoni (2004) - Equivalent Consumption Minimization Strategy
- Peng & Grizzle (2004) - Deterministic Dynamic Programming
- Peng & Grizzle (2007) - Stochastic Dynamic Programming
- Bemporad / Vahidi / Kolmanovsky (2010) - Model Predictive Control

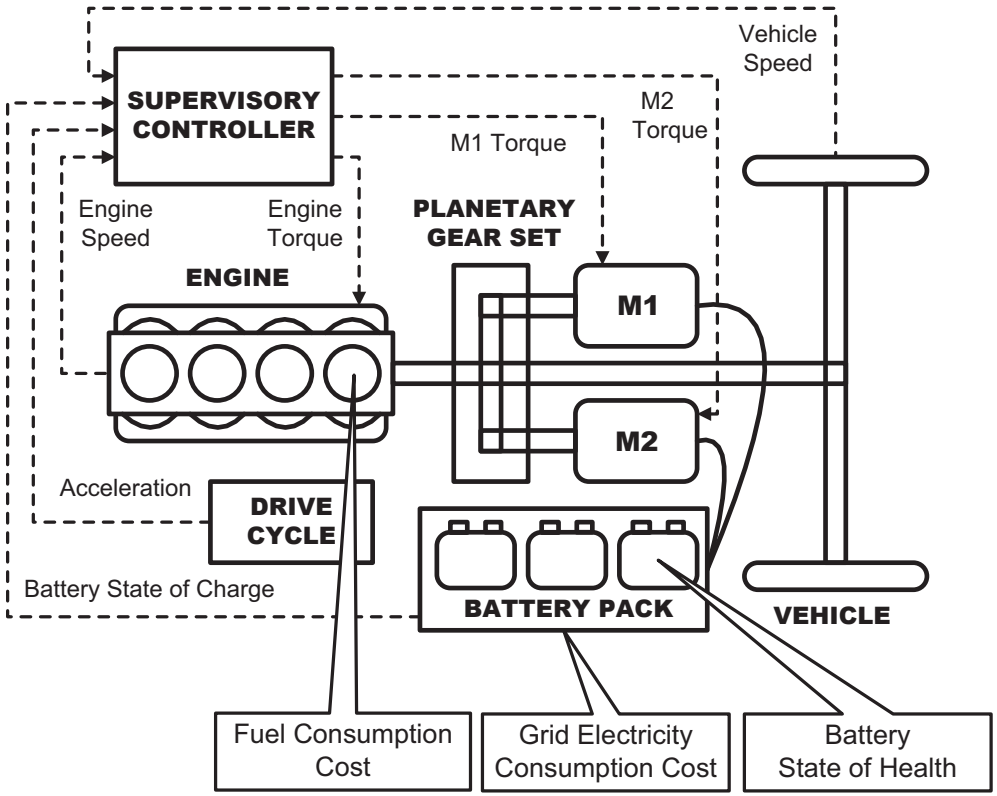
A Short History

- Heuristic algorithms
- Rizzoni (2004) - Equivalent Consumption Minimization Strategy
- Peng & Grizzle (2004) - Deterministic Dynamic Programming
- Peng & Grizzle (2007) - Stochastic Dynamic Programming
- Bemporad / Vahidi / Kolmanovsky (2010) - Model Predictive Control
- Moura (2011) - SDP with Electrochemical Battery Model for Health

Power-Split PHEV Model

Ex: Toyota Prius, Ford Escape Hybrid

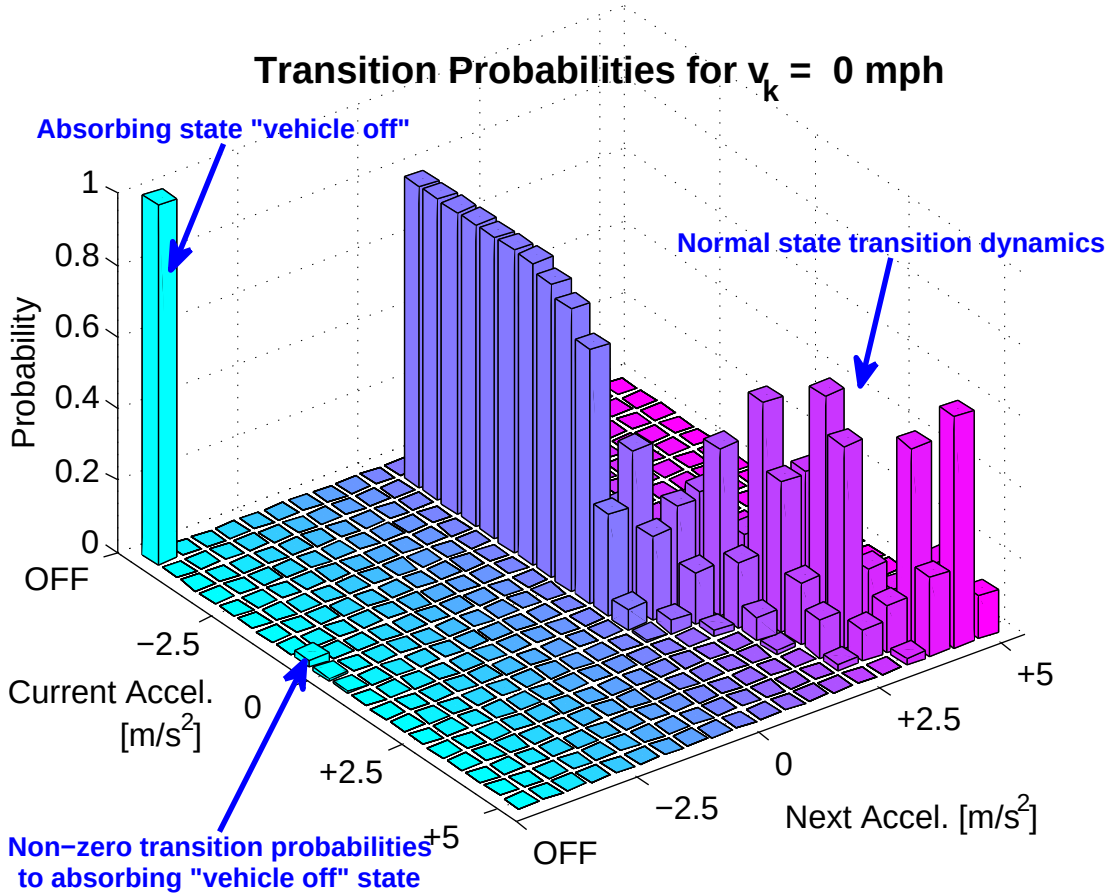
- Control Inputs
  - Engine Torque
  - M1 Torque
- State Variables
  - Engine speed
  - Vehicle speed
  - Battery SOC
  - Vehicle acceleration (Markov Chain)



Markov Chain of Drive Cycle Dynamics

State transition dynamics

$$p_{ijm} = \Pr(a_{k+1} = j | a_k = i, v_k = j)$$



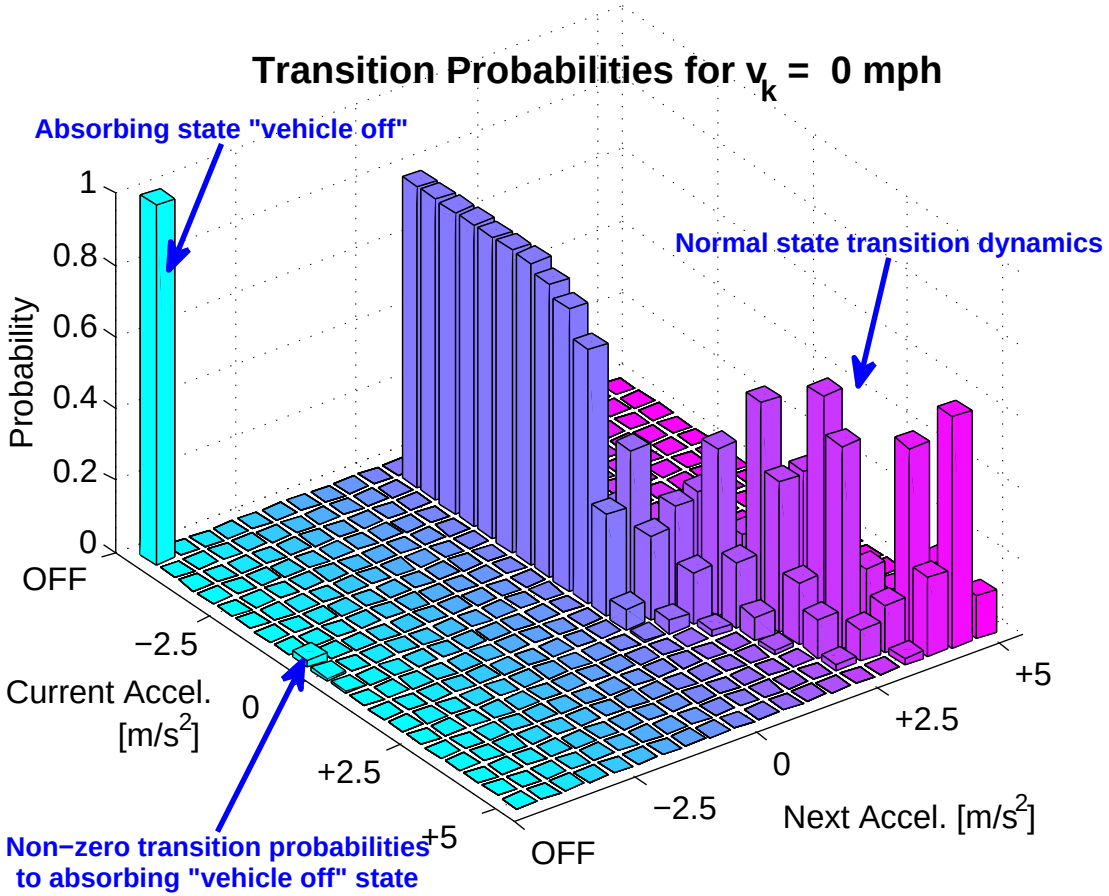
Markov Chain of Drive Cycle Dynamics

State transition dynamics

$$p_{ijm} = \Pr(a_{k+1} = j | a_k = i, v_k = j)$$

Transition to "vehicle off," denoted $a_{k+1} = t$

$$p_{itm} = \Pr(a_{k+1} = t | a_k = i, v_k = 0)$$



Markov Chain of Drive Cycle Dynamics

State transition dynamics

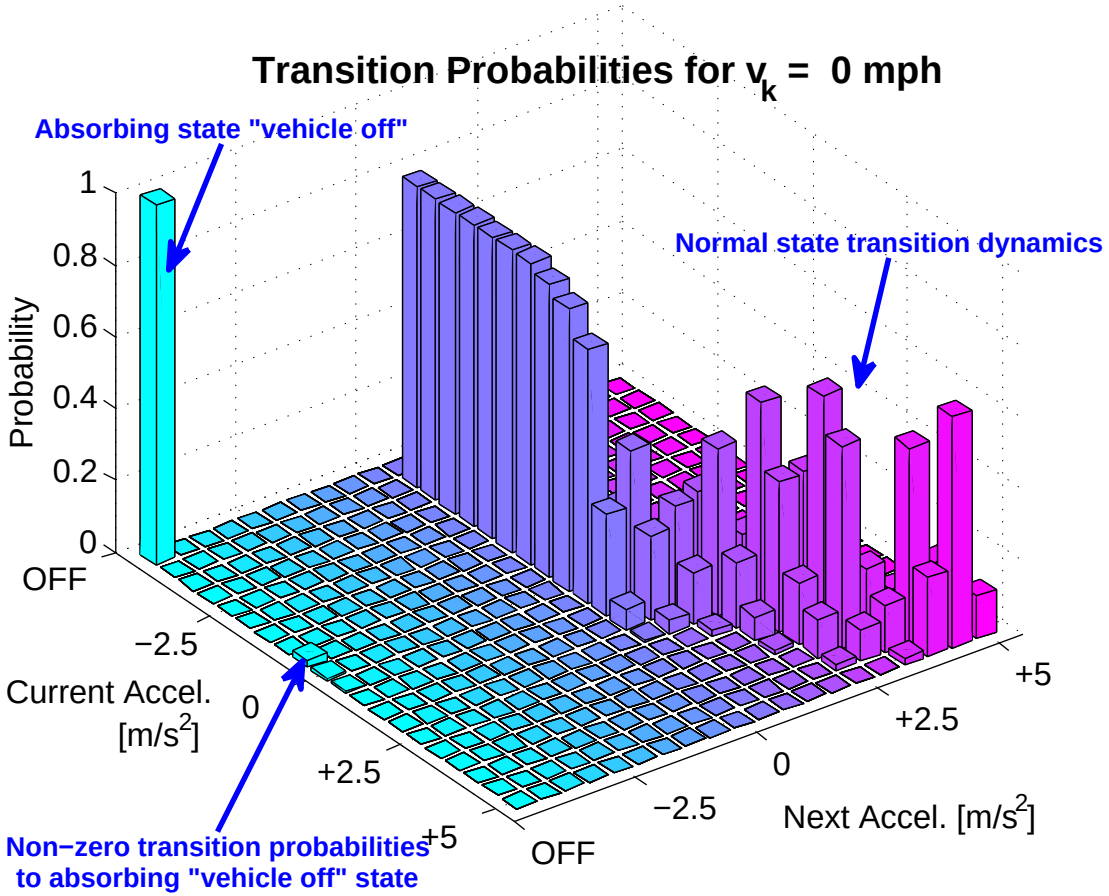
$$p_{ijm} = \Pr(a_{k+1} = j | a_k = i, v_k = j)$$

Transition to "vehicle off," denoted $a_{k+1} = t$

$$p_{itm} = \Pr(a_{k+1} = t | a_k = i, v_k = 0)$$

Absorbing state "vehicle off"

$$1 = \Pr(a_{k+1} = t | a_k = t, v_k = 0)$$



Markov Chain of Drive Cycle Dynamics

State transition dynamics

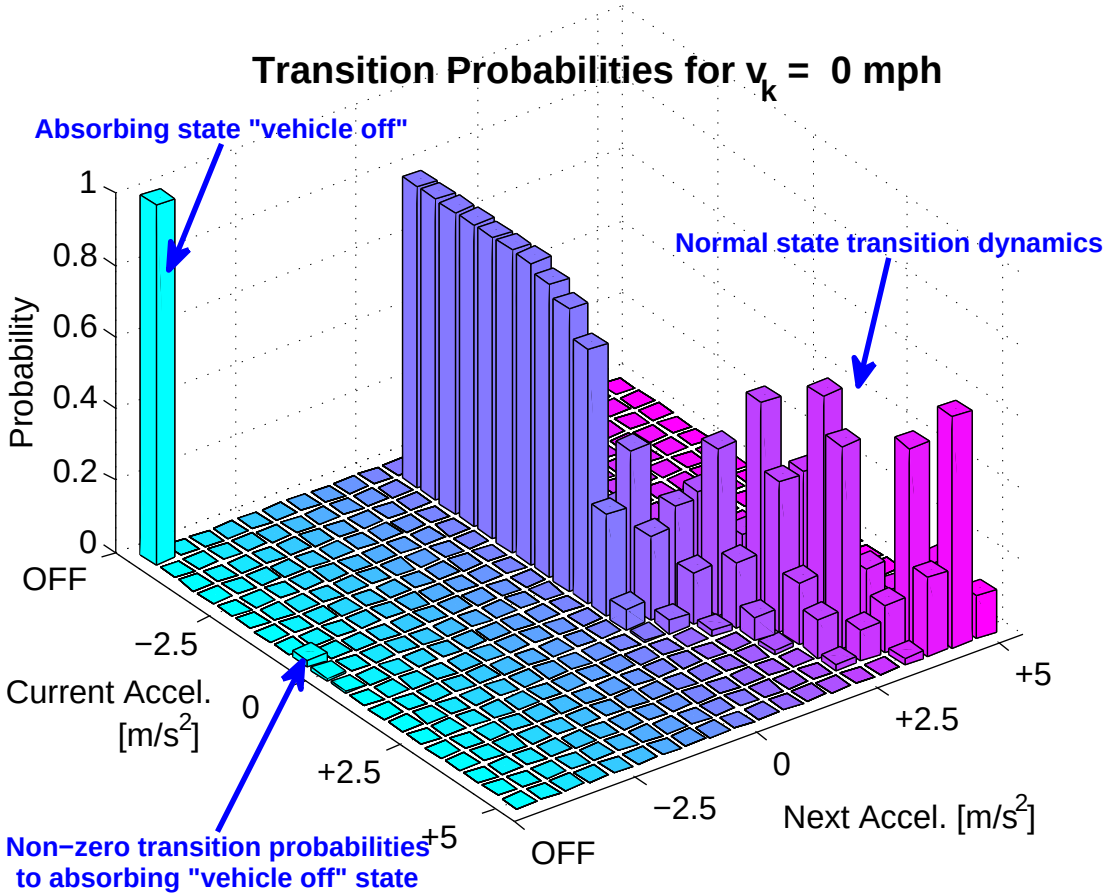
$$p_{ijm} = \Pr(a_{k+1} = j | a_k = i, v_k = j)$$

Transition to "vehicle off," denoted $a_{k+1} = t$

$$p_{itm} = \Pr(a_{k+1} = t | a_k = i, v_k = 0)$$

Absorbing state "vehicle off"

$$1 = \Pr(a_{k+1} = t | a_k = t, v_k = 0)$$



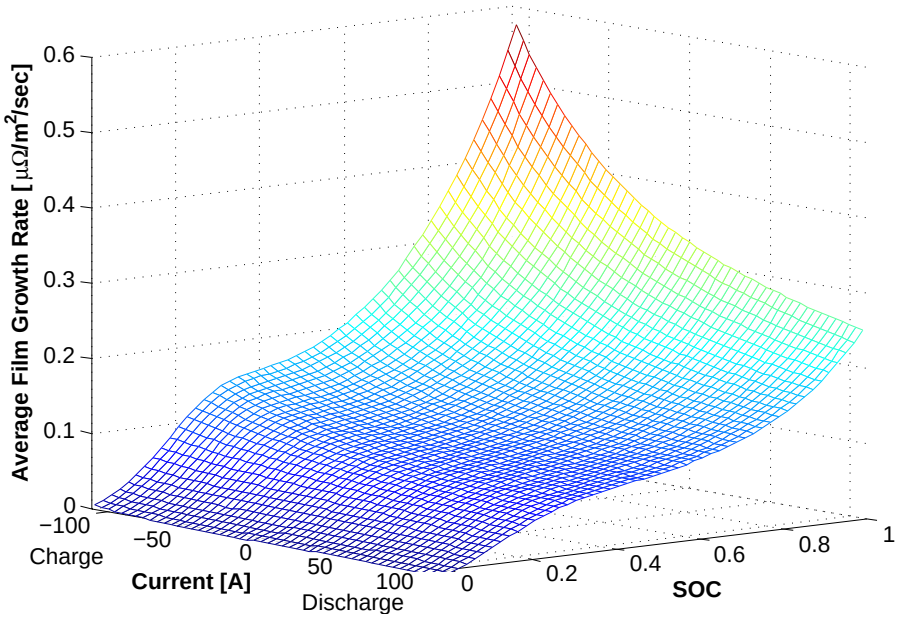
Identification data:

- federal certification cycles, "naturalistic" driving data, 2009 NHTS

Two Battery Health Model Case Studies

Anode-side SEI Layer Growth

- Resistive film layer at solid/electrolyte interface

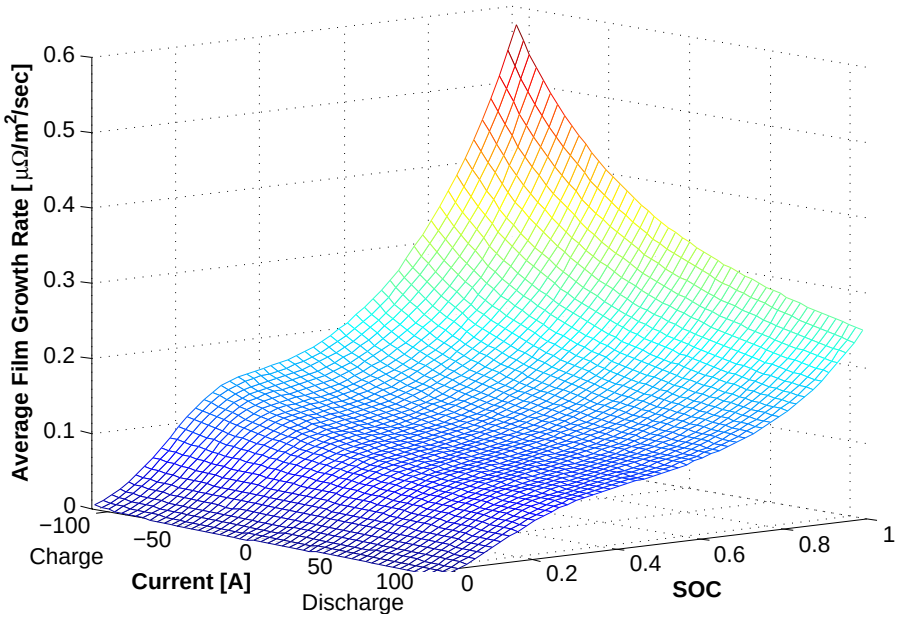


Ramadass, Haran, White, Popov (2003)

Two Battery Health Model Case Studies

Anode-side SEI Layer Growth

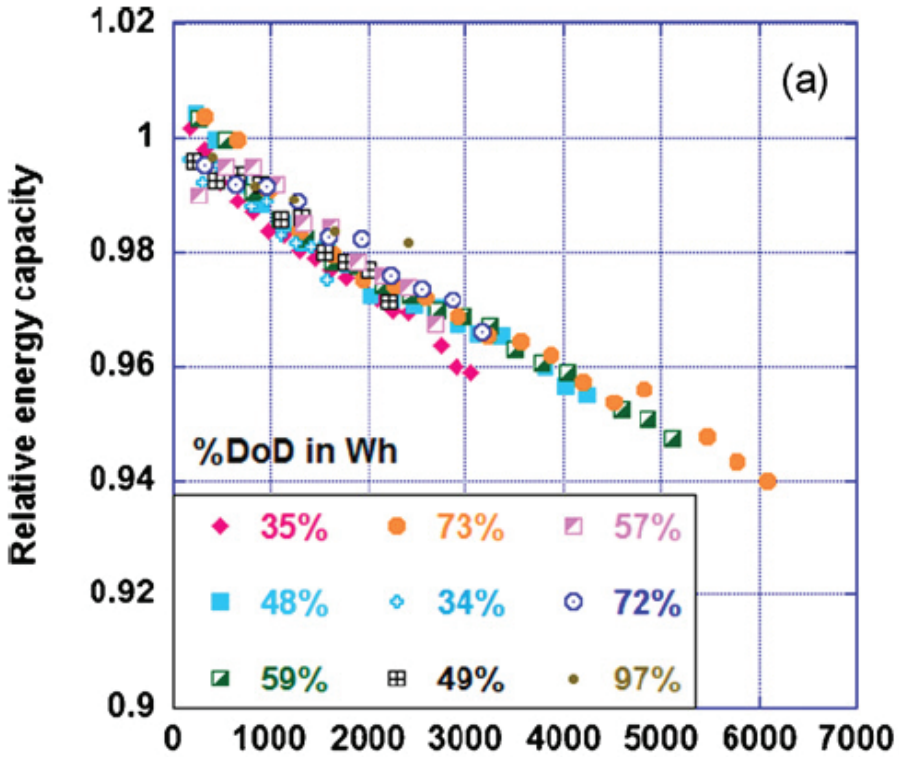
- Resistive film layer at solid/electrolyte interface



Ramadass, Haran, White, Popov (2003)

Charge Processed

- Capacity fade $\propto$ Ah into/out of cell

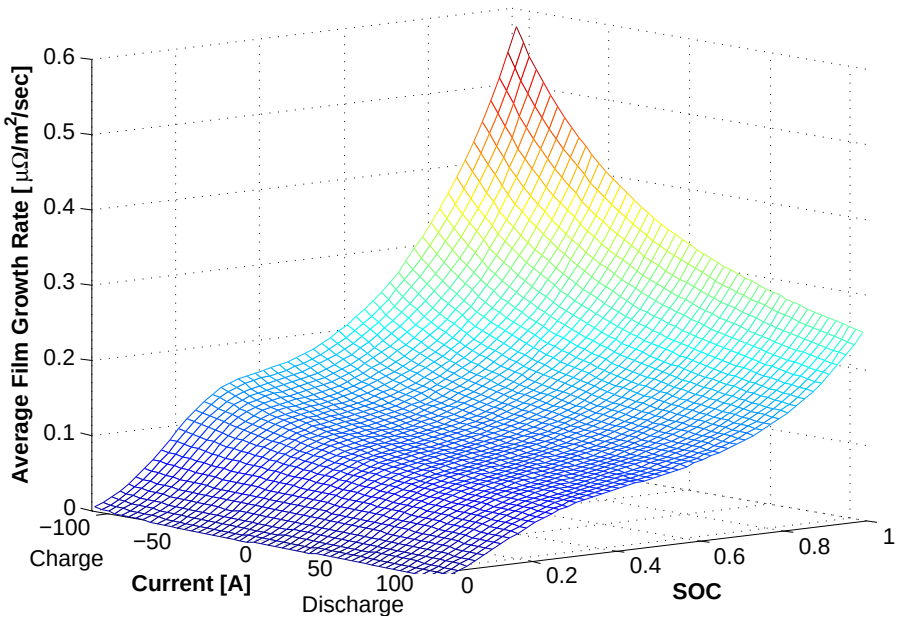


Peterson, Apt, Whitacre (2005)

Two Battery Health Model Case Studies

Anode-side SEI Layer Growth

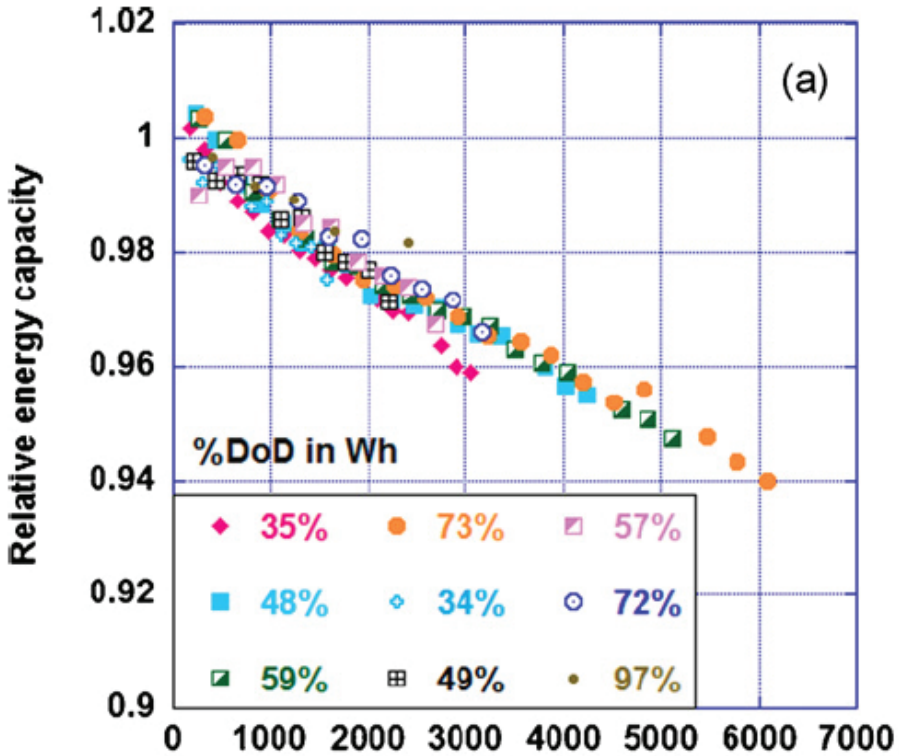
- Resistive film layer at solid/electrolyte interface



Ramadass, Haran, White, Popov (2003)

Charge Processed

- Capacity fade $\propto$ Ah into/out of cell



Peterson, Apt, Whitacre (2005)

*Degradation depends on multitude of physical phenomena (e.g. temperature, stress, manufacturing, operating conditions, etc.)

Optimal Control Problem

Multiobjective Shortest-Path Stochastic Dynamic Program

Cost Functional:

$$J^g = \lim_{N\to\infty} \mathrm{E}\left[\sum_{k=0}^{N} c(x_k, u_k)\right]$$

Constraints:

$$x_{k+1} = f(x_k, u_k, w_k)$$
$$x \in X$$
$$u \in U(x)$$

Objective:

$$g^* = \arg\min_{g\in G} J^g$$

Optimal Control Problem

Multiobjective Shortest-Path Stochastic Dynamic Program

Cost Functional:

$$J^g = \lim_{N\to\infty} \mathrm{E}\left[\sum_{k=0}^{N} c(x_k, u_k)\right]$$

Constraints:

$$x_{k+1} = f(x_k, u_k, w_k)$$
$$x \in X$$
$$u \in U(x)$$

Objective:

$$g^* = \arg\min_{g\in G} J^g$$

Cost per time step: Convex sum of energy cost and battery health

$$c(x_k, u_k) = \alpha \cdot c_E(x_k, u_k) + (1-\alpha) \cdot c_H(x_k, u_k)$$

Optimal Control Problem

Multiobjective Shortest-Path Stochastic Dynamic Program

Cost Functional:

$$J^g = \lim_{N\to\infty} \mathrm{E}\left[\sum_{k=0}^{N} c(x_k, u_k)\right]$$

Constraints:

$$x_{k+1} = f(x_k, u_k, w_k)$$
$$x \in X$$
$$u \in U(x)$$

Objective:

$$g^* = \arg\min_{g\in G} J^g$$

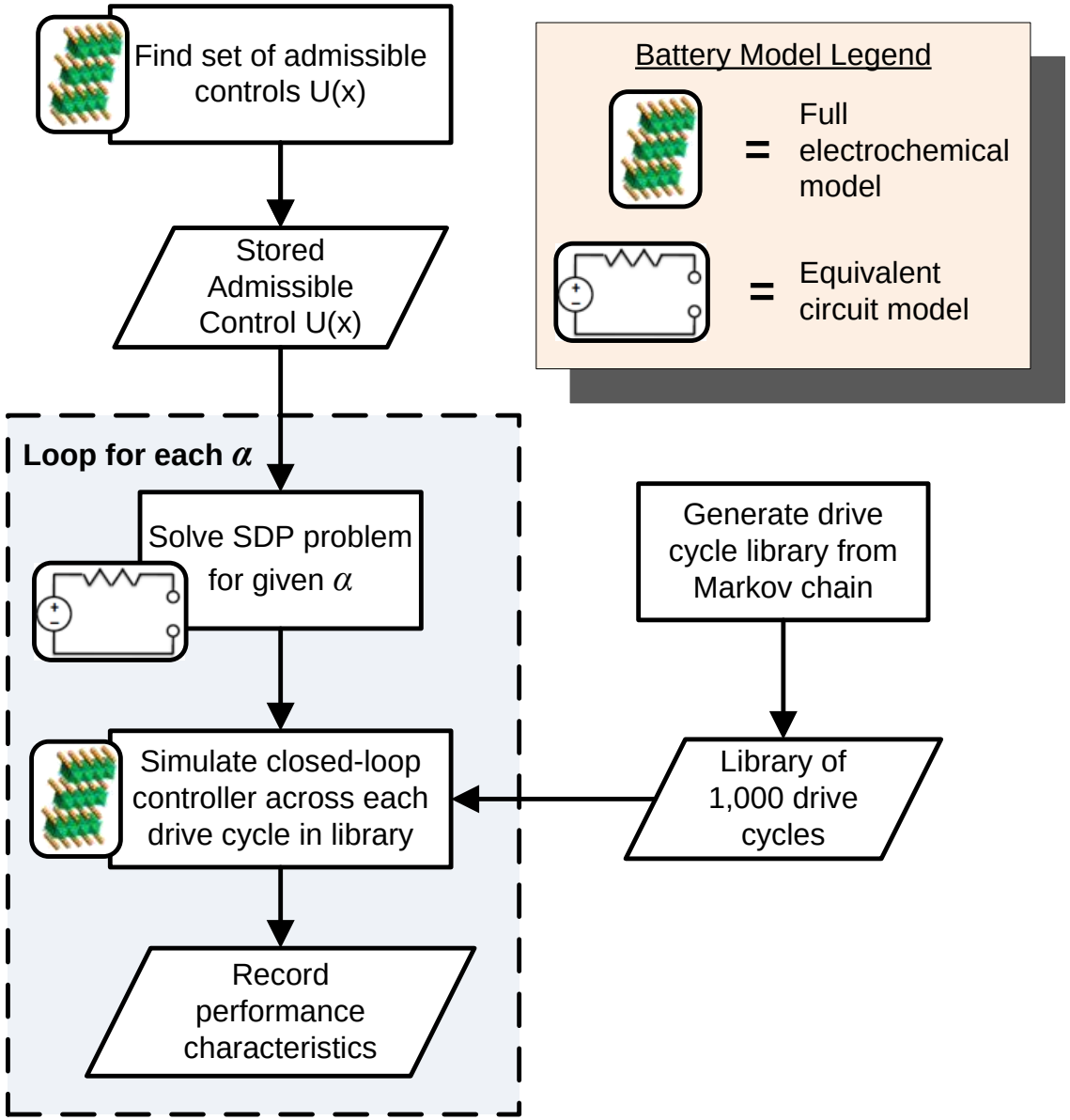
Cost per time step: Convex sum of energy cost and battery health

$$c(x_k, u_k) = \alpha \cdot c_E(x_k, u_k) + (1-\alpha)\cdot c_H(x_k, u_k)$$

Energy:
$$c_E(x_k, u_k) = \beta W_{fuel} + \frac{-V_{oc} Q_{batt} S\dot{O}C}{\eta_{EVSE}}$$

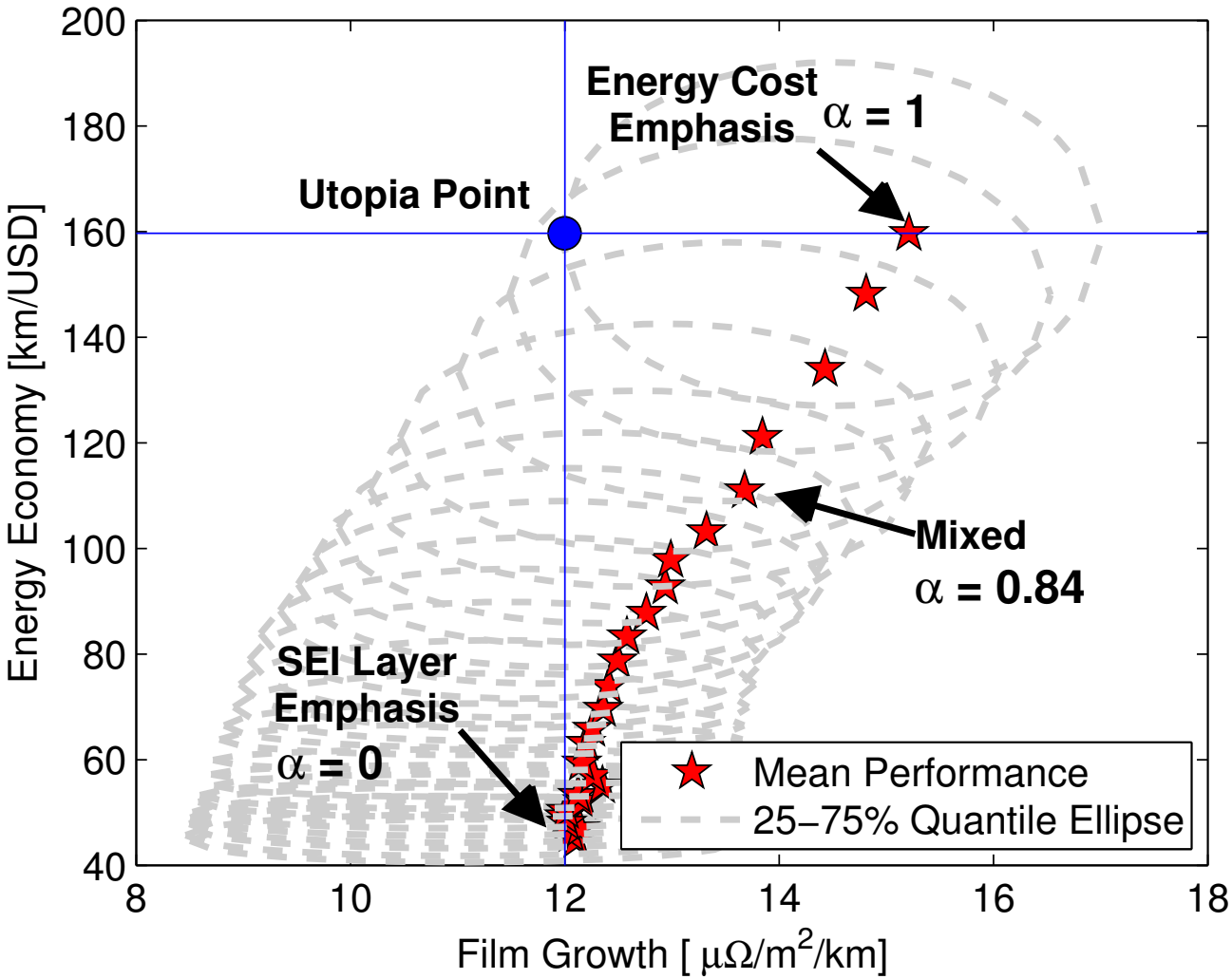
Health:
$$c_H(x_k, u_k) = \dot{\delta}_{film}(I, SOC) \quad \text{OR} \quad |I/I_{max}|$$

Optimization Procedure



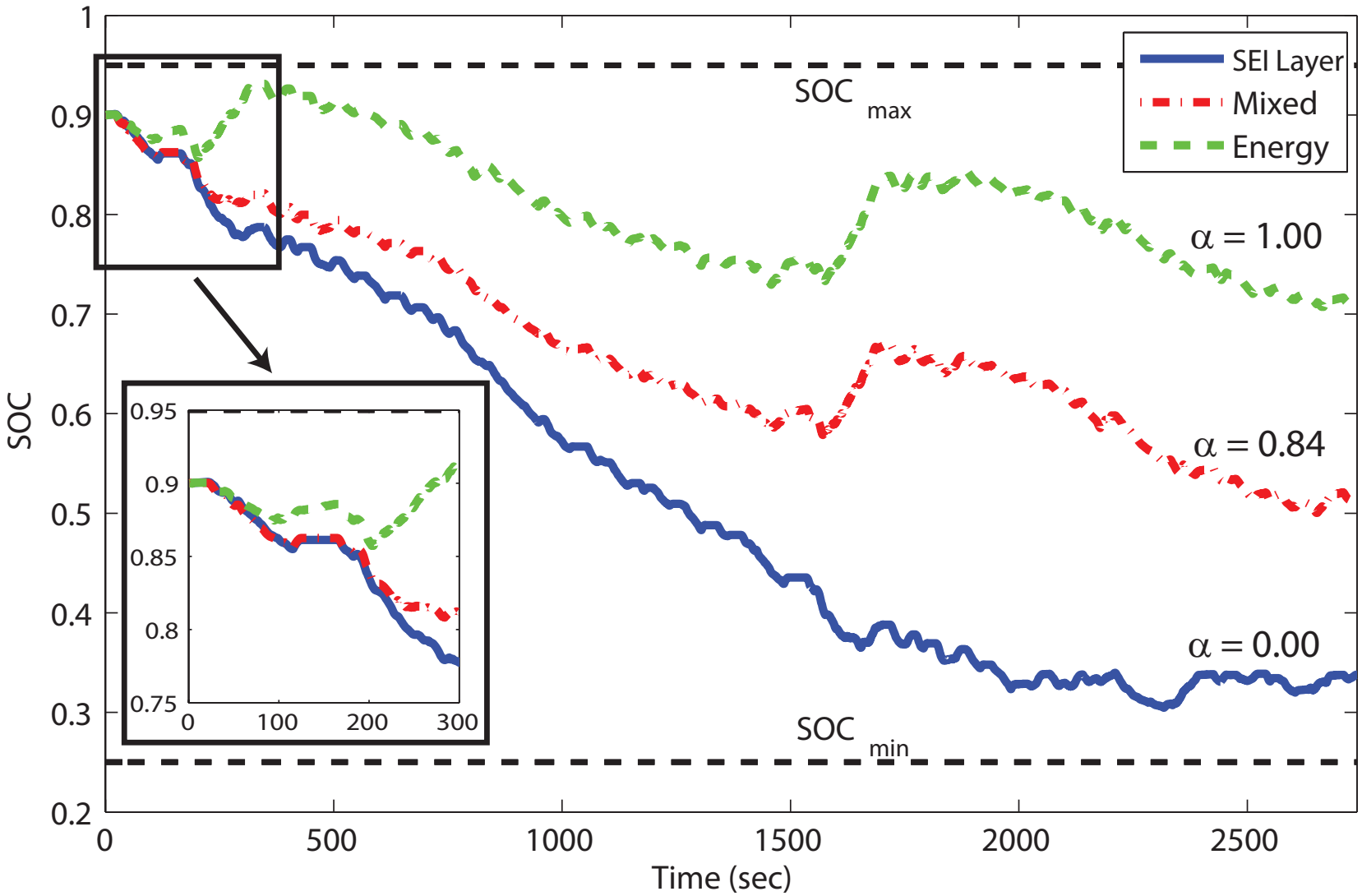
Pareto Set of Optimal Solutions

Anode-side SEI Layer Growth



SOC Trajectories

Anode-side SEI Layer Growth | UDDSx2



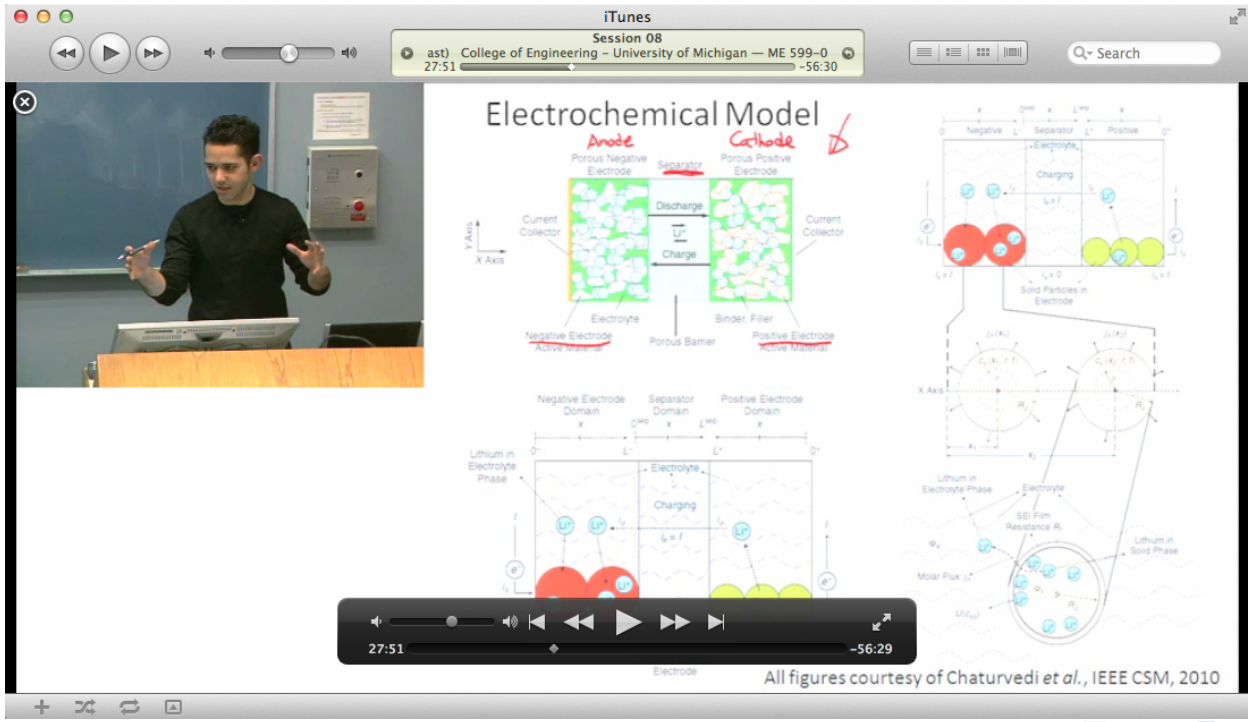
Battery Systems and Control Course

Funded by DOE-ARRA Advanced Electric Drive Vehicle Education Program

Enrollment

- Winter 2010: 59 + 5 distance
- Winter 2011: 50 + 26 distance
- ME, EE, ChemE, CS, Energy Systems, MatSci, Physics, Math

- Undergraduates
- Graduate students
- Professionals
  - Tesla Motors, General Motors, Roush, US Army



Not Covered Today

- Offline Parameter Identification of Electrochemical Models
  [ACC11, JPS]
- Charge Un-balancing in Battery Packs
  [DSCC09, IEEE TIE]
- Sensor Placement, Estimation, & Control of Battery Pack Thermal Dynamics
  [CDC12]
- Optimal PEV Charging on the Grid
  [DSCC10, JPS]
- Extremum Seeking with Application to Photovoltaic Systems
  [ACC09, IEEE TEC]
- Optimal Boundary Control of PDEs via Weak Variations
  [ACC11, ASME JDSMC]

Summary

- Simultaneous SOC/SOH estimation of physically meaningful variables via electrochemical models, PDE estimation theory, and adaptive control.

- PHEV power management via electrochemical models and constrained multi-objective stochastic optimal control.

Summary

- Simultaneous SOC/SOH estimation of physically meaningful variables via electrochemical models, PDE estimation theory, and adaptive control.
- PHEV power management via electrochemical models and constrained multi-objective stochastic optimal control.
- Outlook
  - Experimental validation
  - More complex interactions: stress mechanics, thermodynamics, etc.
  - Grid-scale Energy Storage for Renewables & Ancillary Services

Summary

- Simultaneous SOC/SOH estimation of physically meaningful variables via electrochemical models, PDE estimation theory, and adaptive control.
- PHEV power management via electrochemical models and constrained multi-objective stochastic optimal control.
- Outlook
  - Experimental validation
  - More complex interactions: stress mechanics, thermodynamics, etc.
  - Grid-scale Energy Storage for Renewables & Ancillary Services
- Battery systems and control: A critically important and technically rich research area

Thanks for your attention!
Questions?

Scott J. Moura, Ph.D.
UC Presidential Postdoctoral Fellow
UC San Diego
http://flyingv.ucsd.edu/smoura/