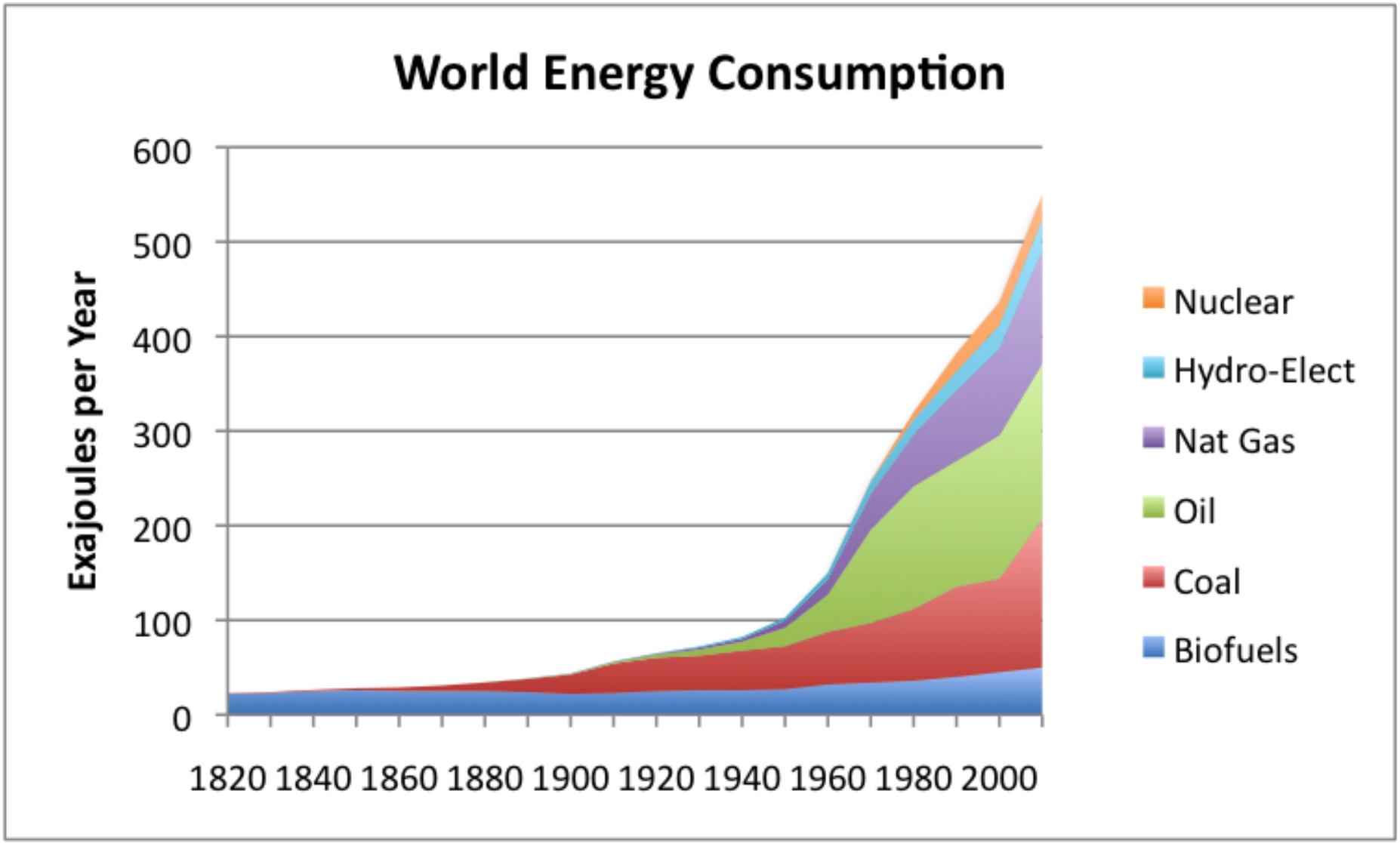
Modeling, Estimation, and Control in Energy Systems: Batteries & Demand Response

Scott Moura

Assistant Professor | eCAL Director
Civil & Environmental Engineering
University of California, Berkeley

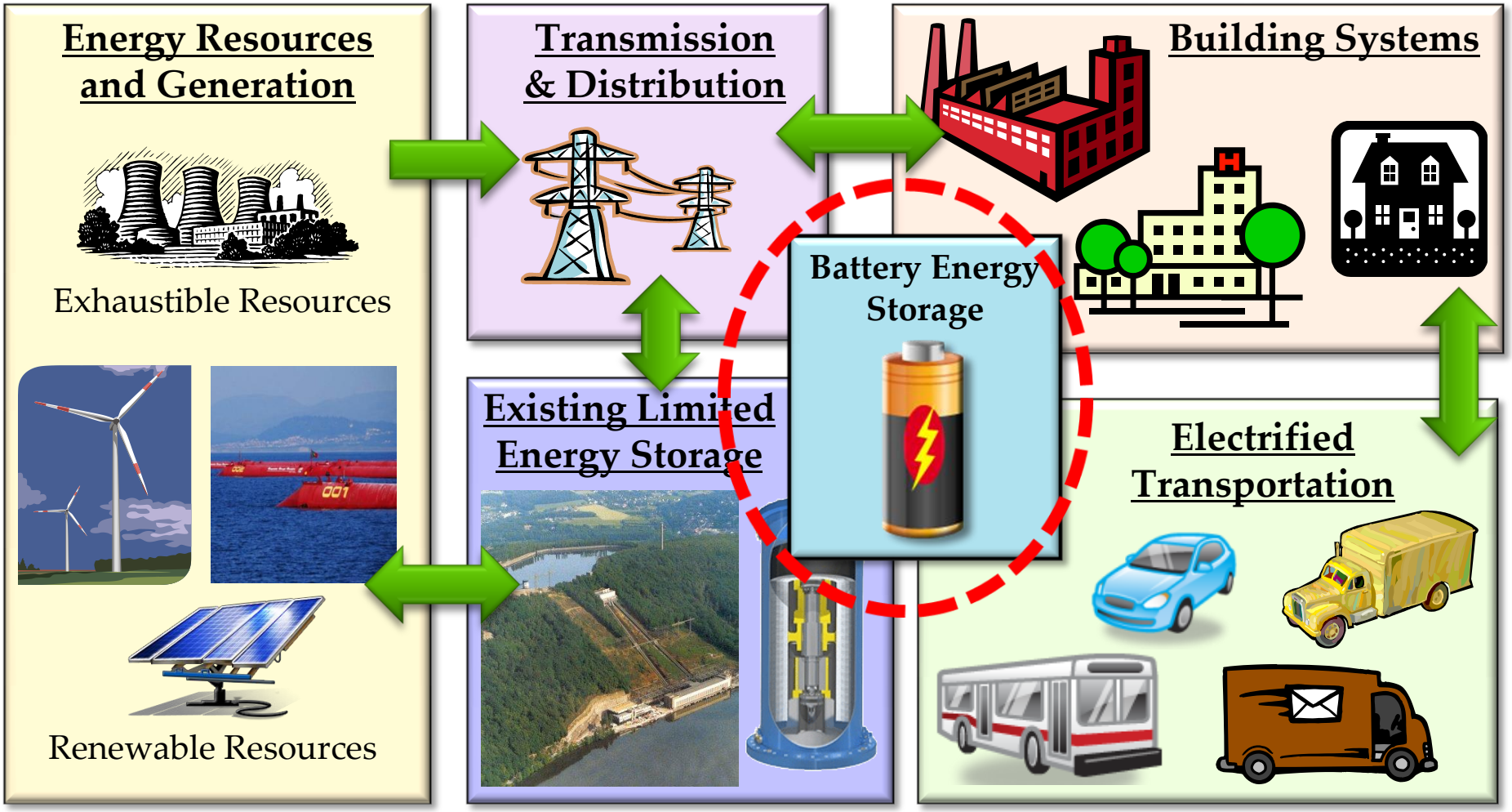
NEC Laboratories America, Inc.





Source: Vaclav Smil Estimates from Energy Transitions

Vision for Future Energy Infrastructure



Energy Systems of Interest

Energy storage	Smart Grid-Transportation
(e.g., batteries)	(e.g., demand response)

Energy Systems of Interest

Energy storage	Smart Grid-Transportation
(e.g., batteries)	(e.g., demand response)

The Battery Problem

Needs: Cheap, high energy/power, fast charge, long life

The Battery Problem

Needs: Cheap, high energy/power, fast charge, long life

Reality: Expensive, conservatively design/operated, die too quickly

The Battery Problem

Needs: Cheap, high energy/power, fast charge, long life

Reality: Expensive, conservatively design/operated, die too quickly

Some Motivating Facts

EV Batts	1000 USD / kWh (2010)*
	485 USD / kWh (2012)*
	125 USD / kWh for parity to IC engine
	Only 50-80% of available capacity is used
	Range anxiety inhibits adoption
	Lifetime risks caused by fast charging

*Source: MIT Technology Review, "The Electric Car is Here to Stay." (2013)

The Battery Problem

Needs: Cheap, high energy/power, fast charge, long life

Reality: Expensive, conservatively design/operated, die too quickly

Some Motivating Facts

EV Batts	1000 USD / kWh (2010)*
	485 USD / kWh (2012)*
	125 USD / kWh for parity to IC engine
	Only 50-80% of available capacity is used
	Range anxiety inhibits adoption
	Lifetime risks caused by fast charging

Two Solutions

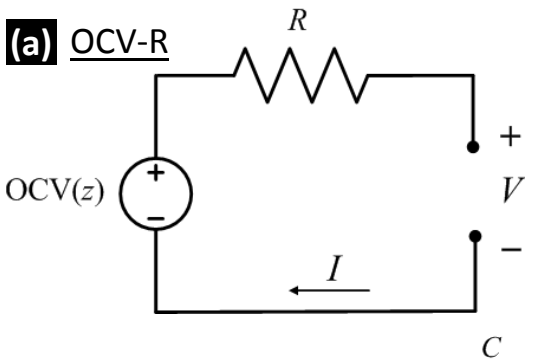
Design better batteries (materials science & chemistry)	Make current batteries better (estimation and control)

*Source: MIT Technology Review, "The Electric Car is Here to Stay." (2013)

Battery Models

Equivalent Circuit Model

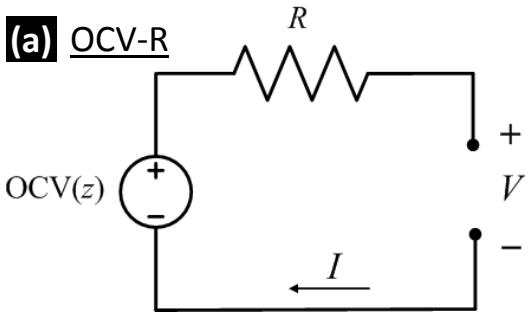
(a) OCV-R



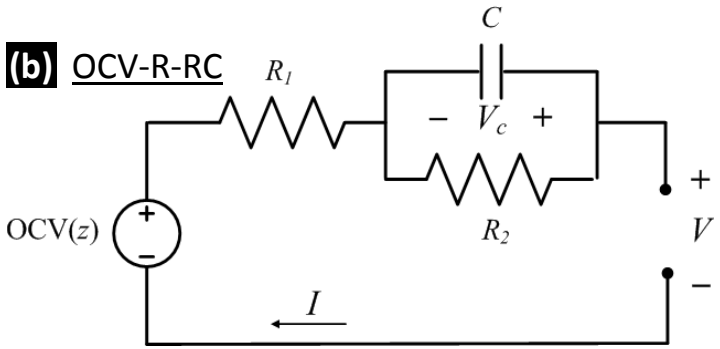
Battery Models

Equivalent Circuit Model

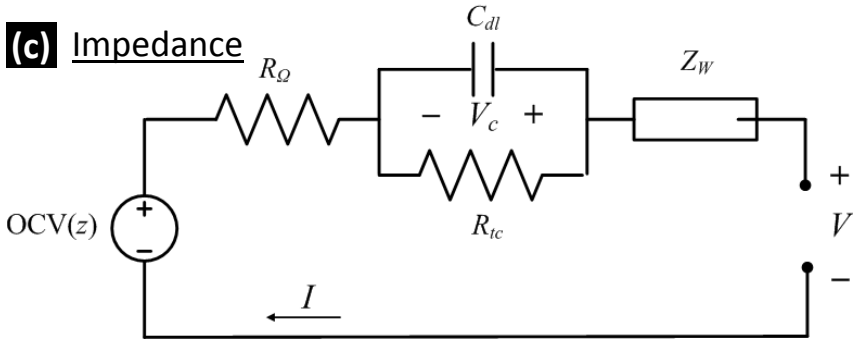
(a) OCV-R



(b) OCV-R-RC



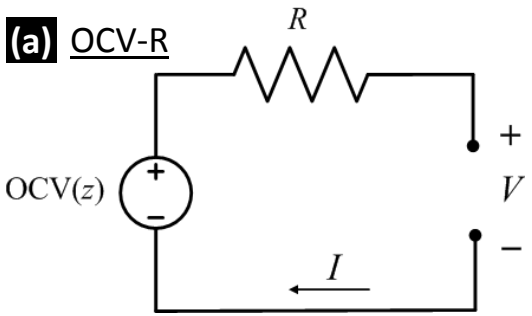
(c) Impedance



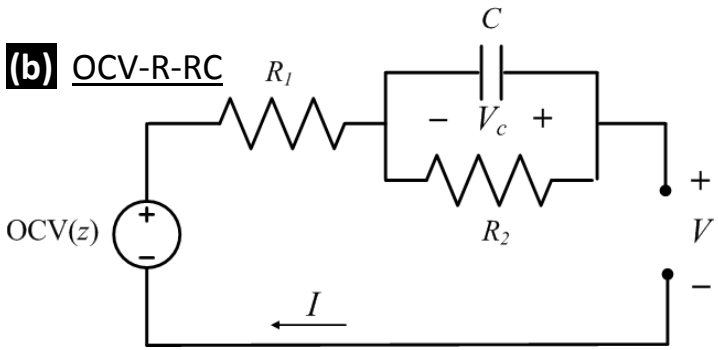
Battery Models

Equivalent Circuit Model

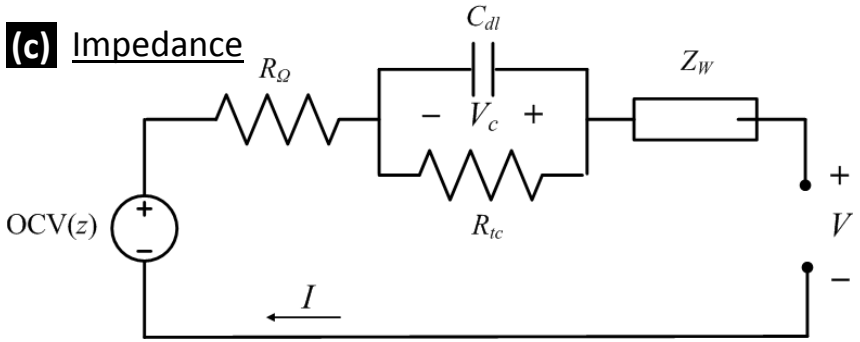
(a) OCV-R



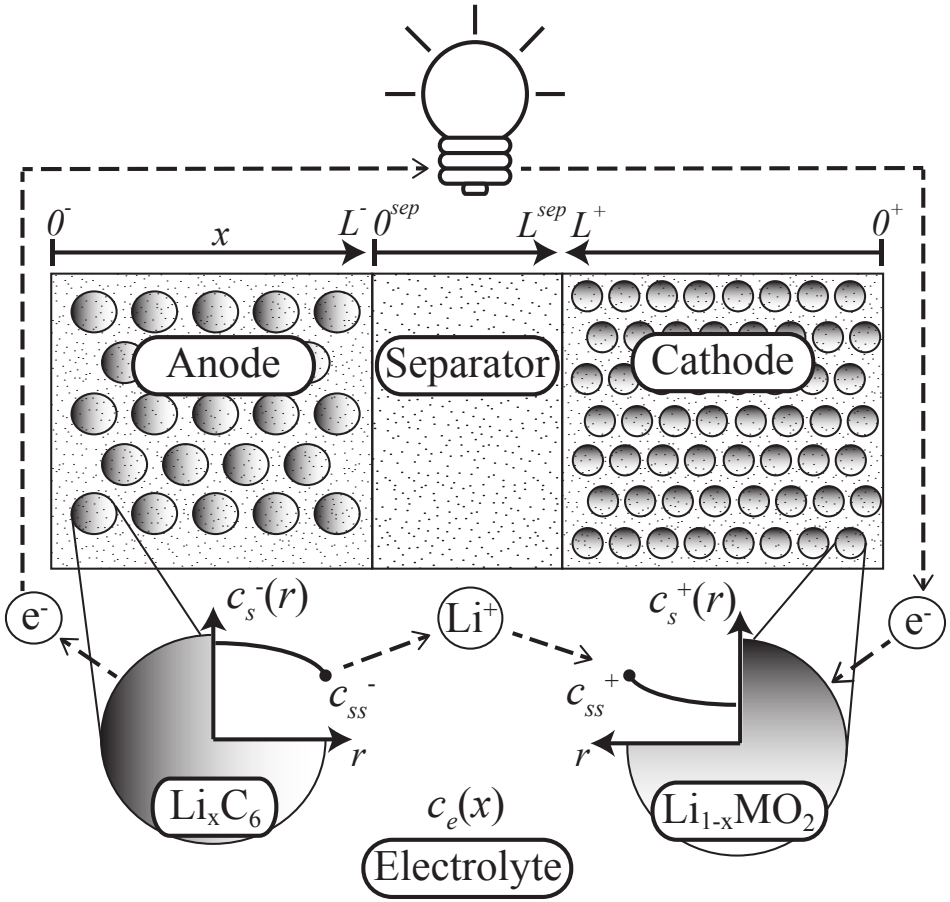
(b) OCV-R-RC



(c) Impedance

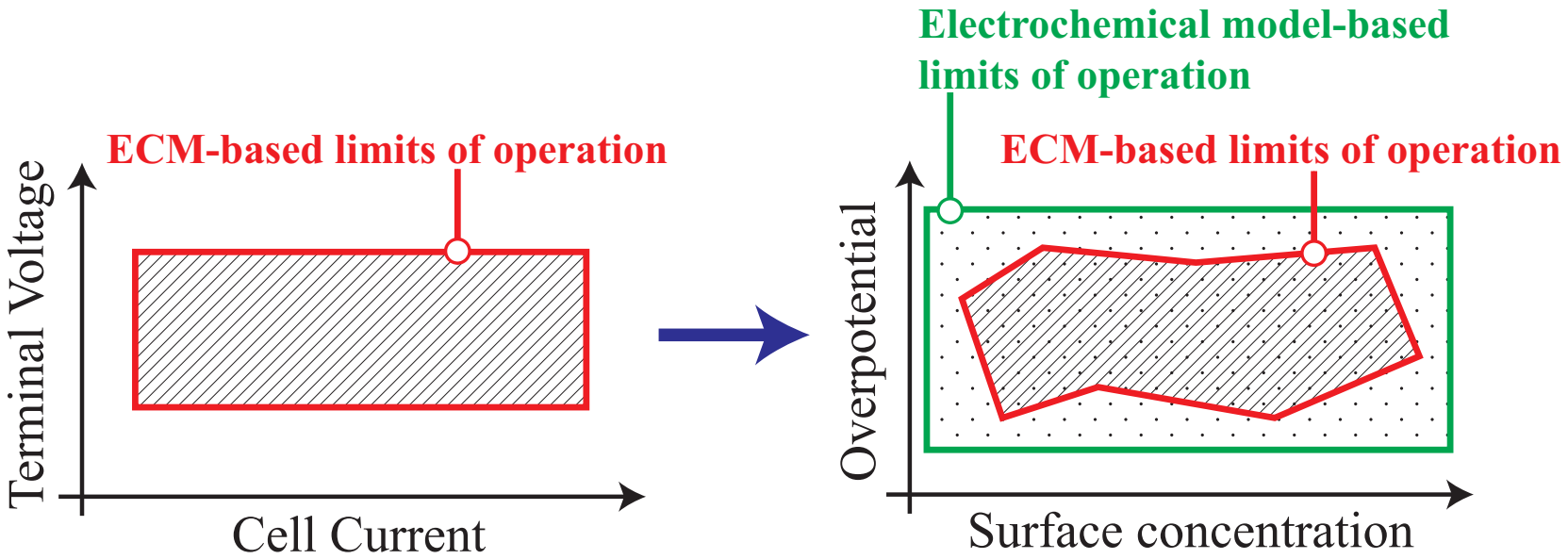


Electrochemical Model





Operate Batteries at their Physical Limits



Electrochemical Model Equations

well, some of them

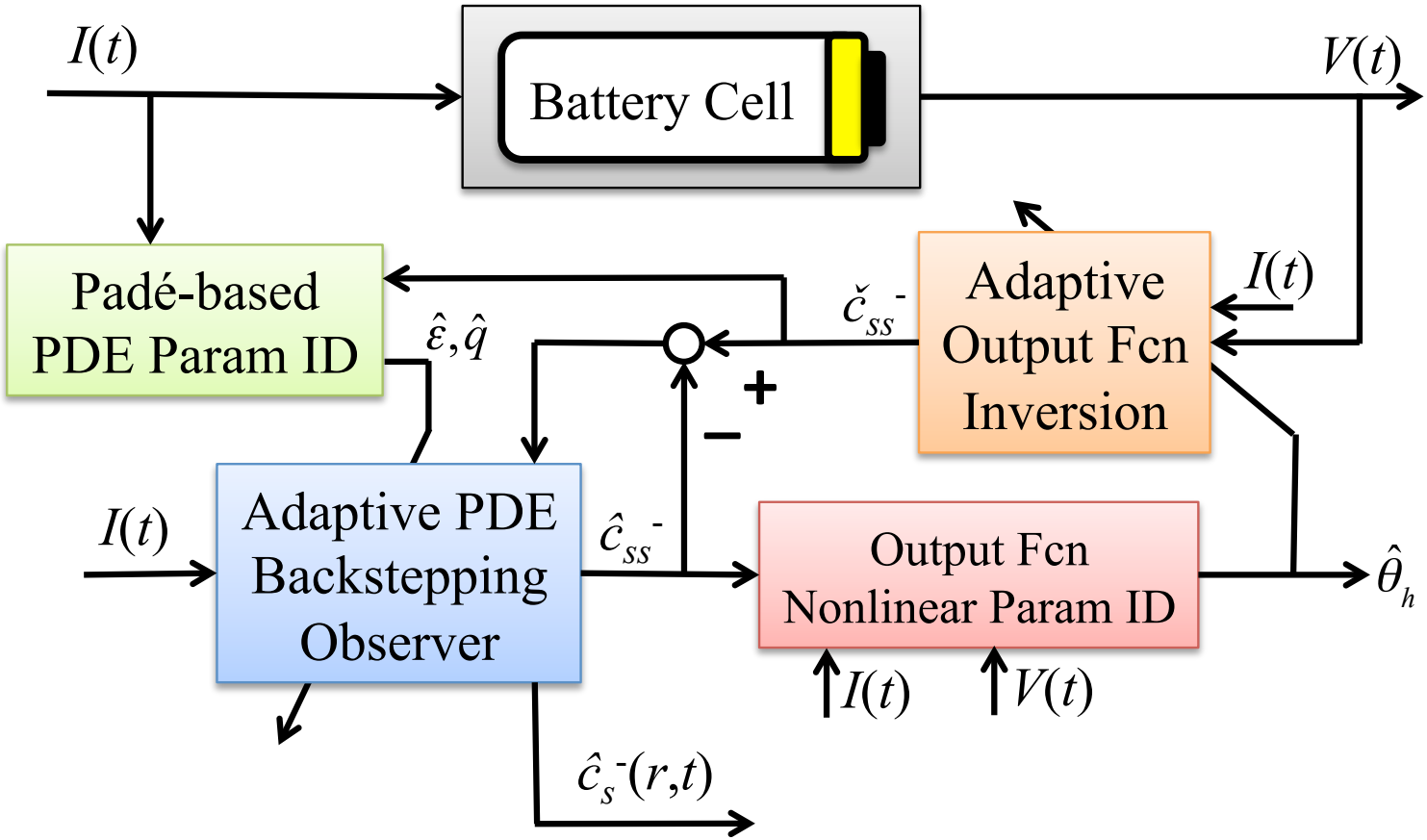
Description	**Equation**
Solid phase Li concentration	$\frac{\partial c_s^{\pm}}{\partial t}(x,r,t) = \frac{1}{r^2}\frac{\partial}{\partial r}\left[D_s^{\pm} r^2 \frac{\partial c_s^{\pm}}{\partial r}(x,r,t)\right]$
Electrolyte Li concentration	$\varepsilon_e \frac{\partial c_e}{\partial t}(x,t) = \frac{\partial}{\partial x}\left[\varepsilon_e D_e \frac{\partial c_e}{\partial x}(x,t) + \frac{1-t_c^0}{F} i_e^{\pm}(x,t)\right]$
Solid potential	$\frac{\partial \phi_s^{\pm}}{\partial x}(x,t) = \frac{i_e^{\pm}(x,t) - I(t)}{\sigma^{\pm}}$
Electrolyte potential	$\frac{\partial \phi_e}{\partial x}(x,t) = -\frac{i_e^{\pm}(x,t)}{\kappa} + \frac{2RT}{F}(1-t_c^0)\left(1 + \frac{d\ln f_{c/a}}{d\ln c_e}(x,t)\right)\frac{\partial \ln c_e}{\partial x}(x,t)$
Electrolyte ionic current	$\frac{\partial i_e^{\pm}}{\partial x}(x,t) = a_s F j_n^{\pm}(x,t)$
Molar flux btw phases	$j_n^{\pm}(x,t) = \frac{1}{F} i_0^{\pm}(x,t)\left[e^{\frac{\alpha_a F}{RT}\eta^{\pm}(x,t)} - e^{-\frac{\alpha_c F}{RT}\eta^{\pm}(x,t)}\right]$
Temperature	$\rho c_P \frac{dT}{dt}(t) = h\left[T^0(t) - T(t)\right] + I(t)V(t) - \int_{0^-}^{0^+} a_s F j_n(x,t)\Delta T(x,t)dx$

Matlab CODE: github.com/scott-moura/dfn

Animation of Li Ion Evolution

Adaptive Observer

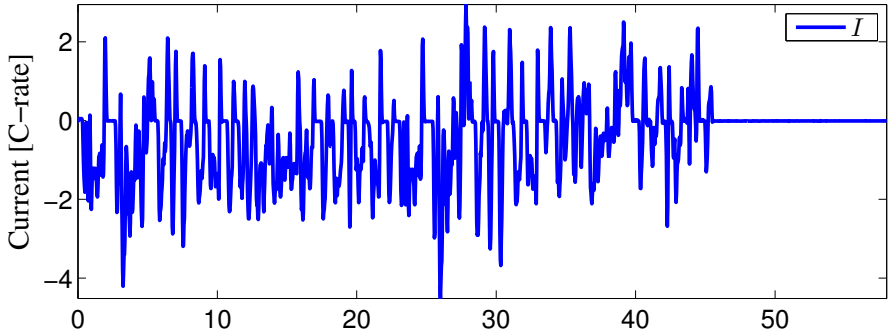
Combined State & Parameter Estimation



S. J. Moura, N. A. Chaturvedi, M. Krstic, "Adaptive PDE Observer for Battery SOC/SOH Estimation via an Electrochemical Model," *ASME Journal of Dynamic Systems, Measurement, and Control*, 2013.

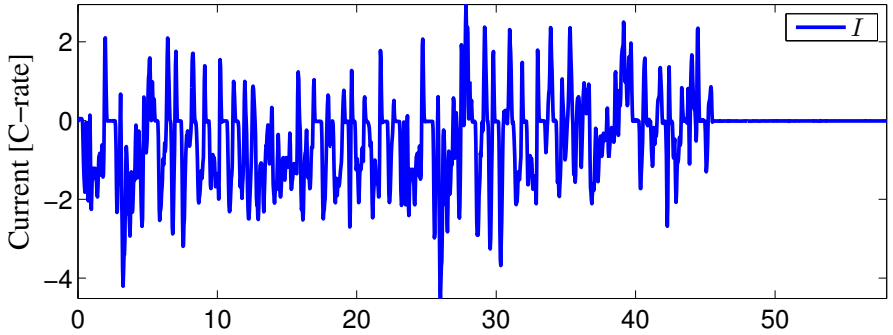
Results

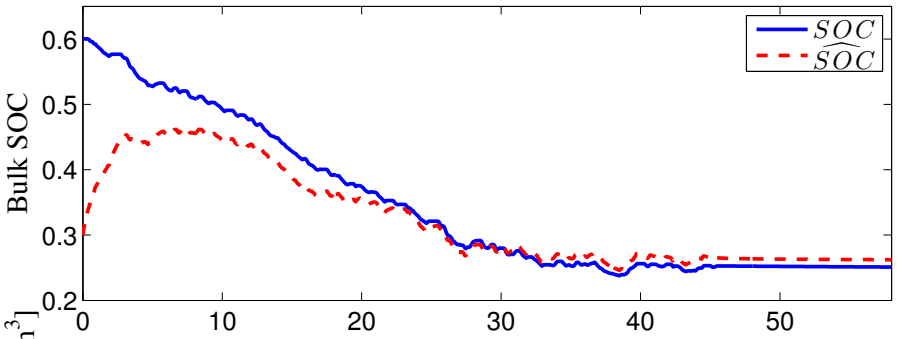
UDDS Drive Cycle Input

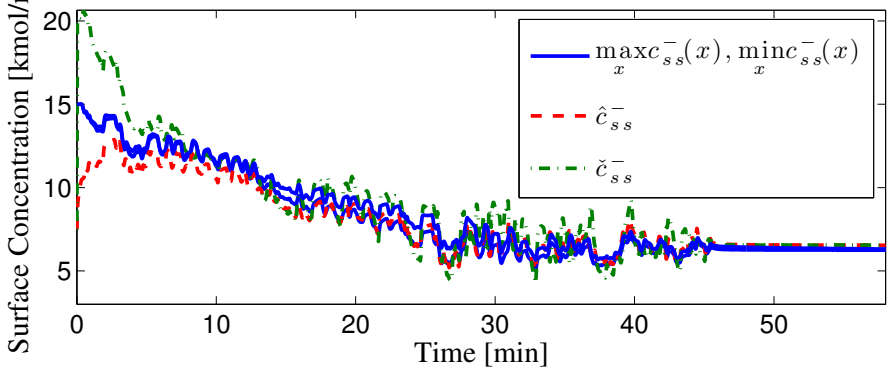


Results

UDDS Drive Cycle Input

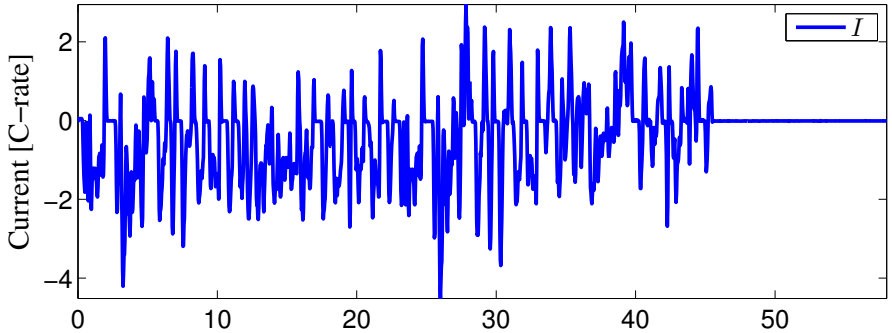


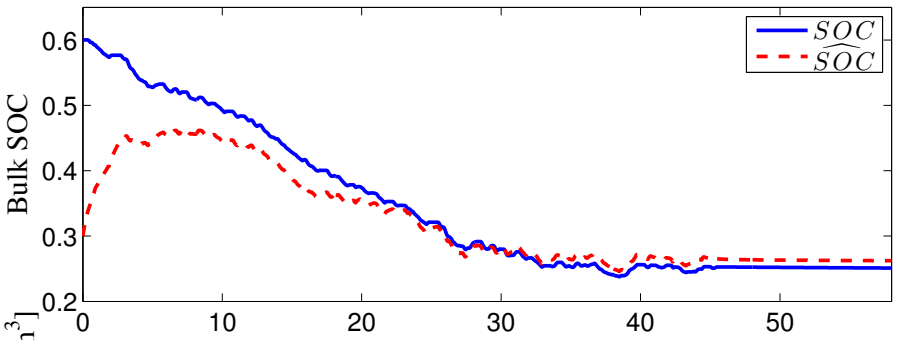


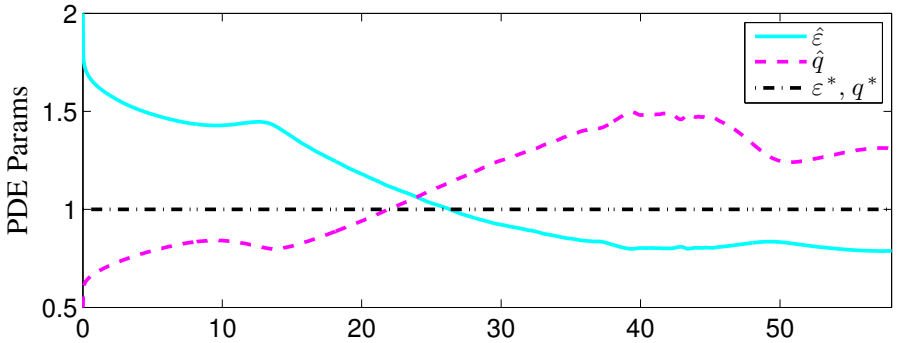


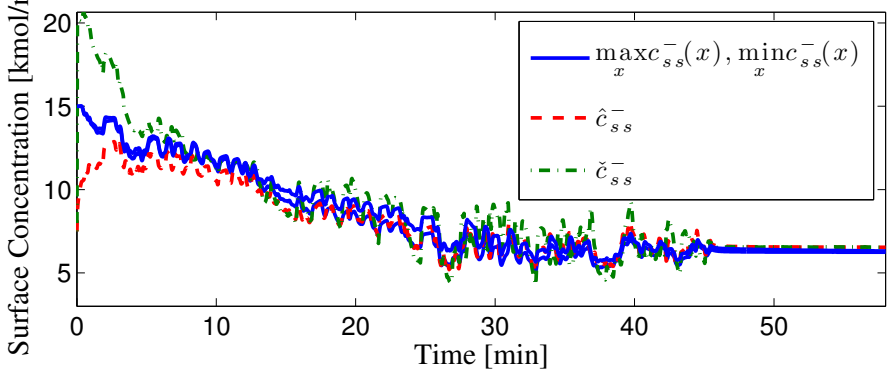
Results

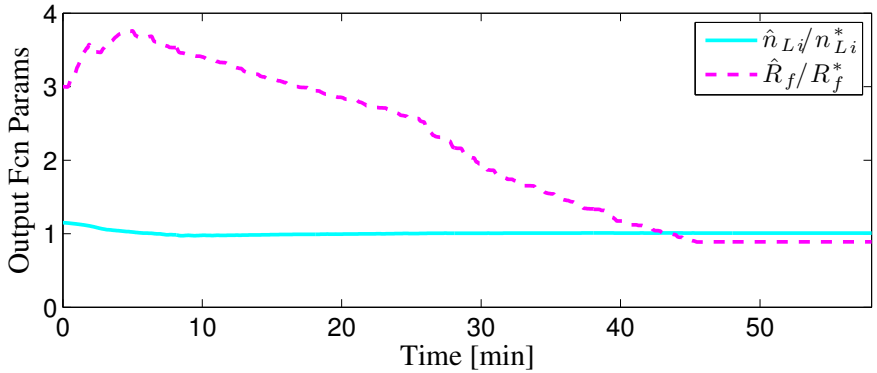
UDDS Drive Cycle Input







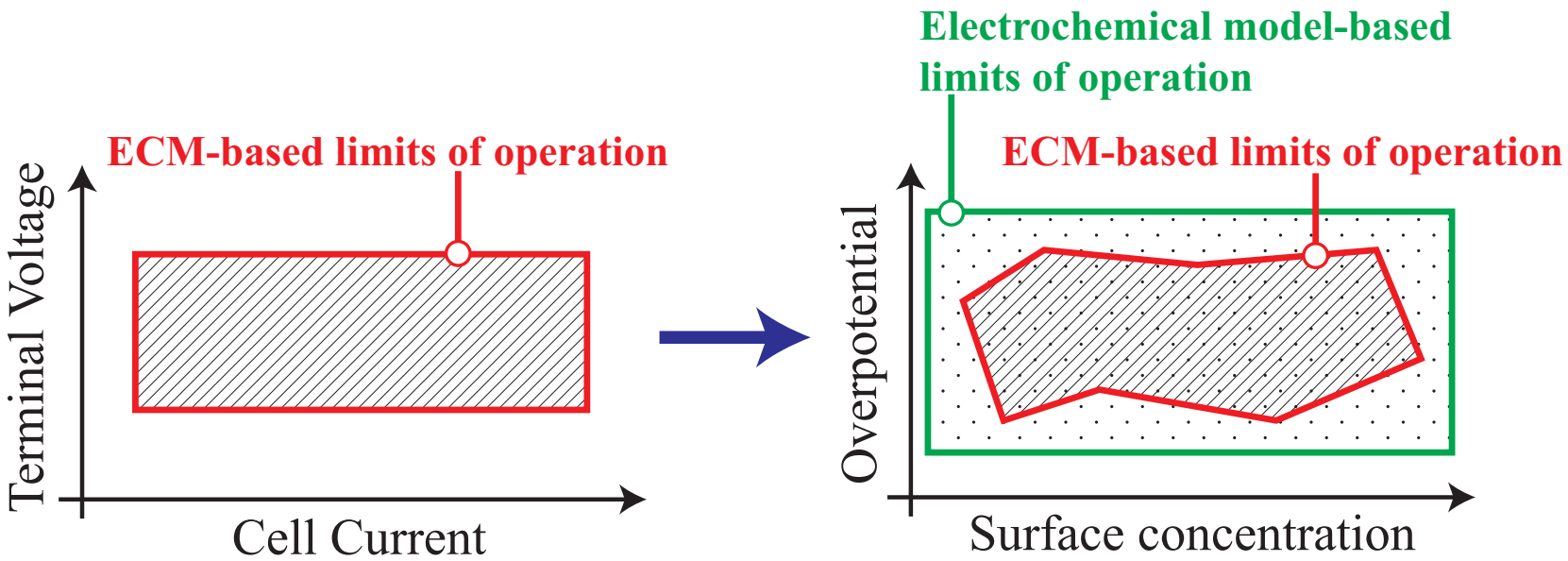




Operate Batteries at their Physical Limits

Problem Statement

Given accurate state estimates, govern the electric current such that safe operating constraints are satisfied.

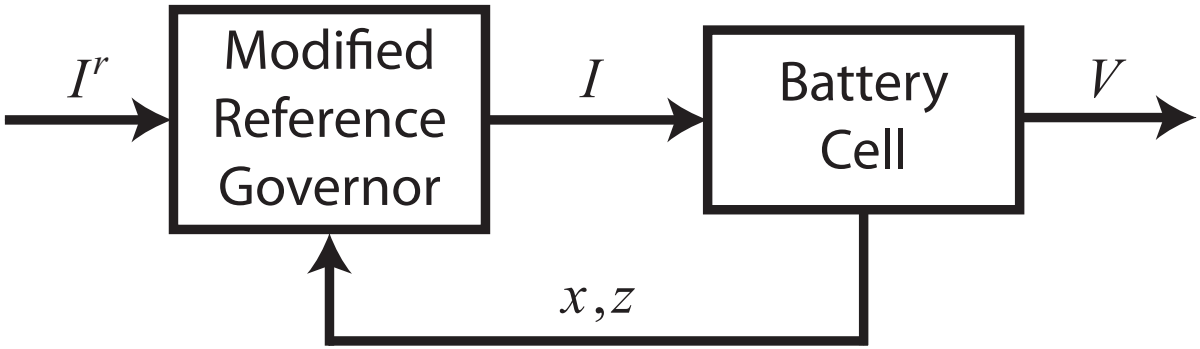


Constraints

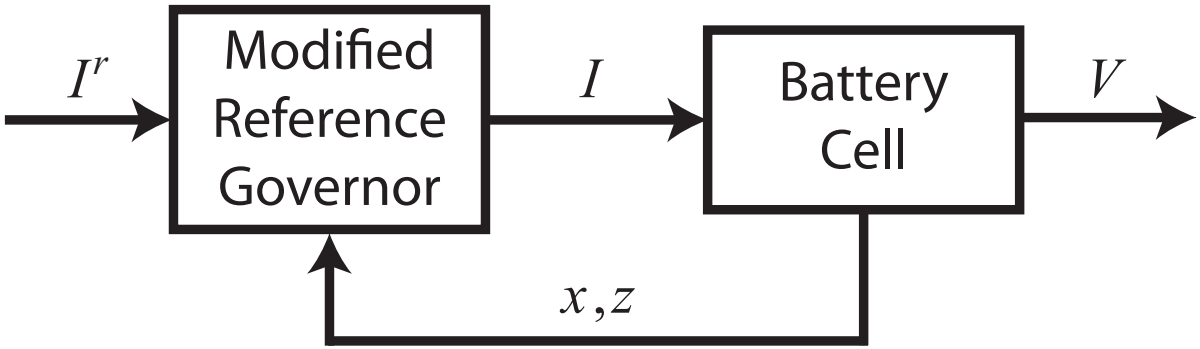
Variable	Definition	Constraint
$I(t)$	Current	Power electronics limits
$c_s^{\pm}(x,r,t)$	Li concentration in solid	Saturation/depletion
$\frac{\partial c_s^{\pm}}{\partial r}(x,r,t)$	Li concentration gradient	Diffusion-induced stress
$c_e(x,t)$	Li concentration in electrolyte	Saturation/depletion
$T(t)$	Temperature	High/low temps accel. aging
$\eta_s(x,t)$	Side-rxn overpotential	Li plating, dendrite formation

Each variable, y, must satisfy $y_{\min} \leq y \leq y_{\max}$.

The Algorithm: Modified Reference Governor (MRG)



The Algorithm: Modified Reference Governor (MRG)

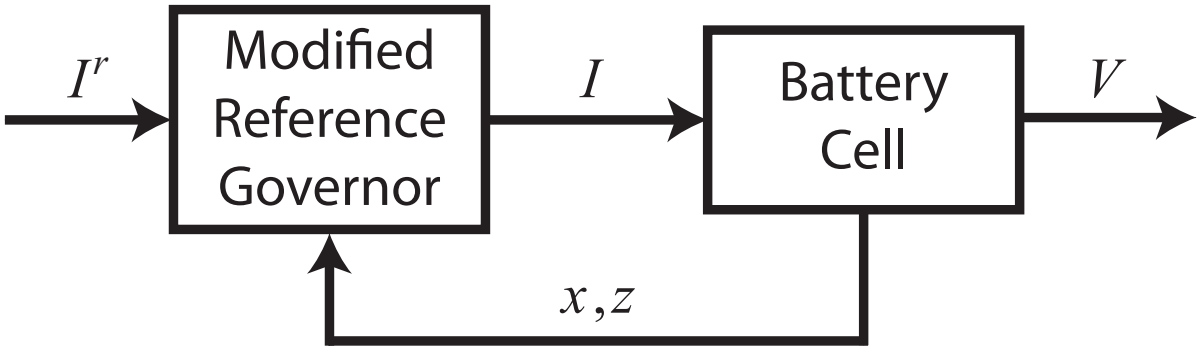


MRG Equations

$$I[k+1] = \beta^*[k] I^r[k], \qquad \beta^* \in [0,1],$$

$$\beta^*[k] = \max\{\beta \in [0,1] : (x(t), z(t)) \in \mathcal{O}\}$$

The Algorithm: Modified Reference Governor (MRG)



MRG Equations

$$I[k+1] = \beta^*[k] I^r[k], \qquad \beta^* \in [0,1],$$

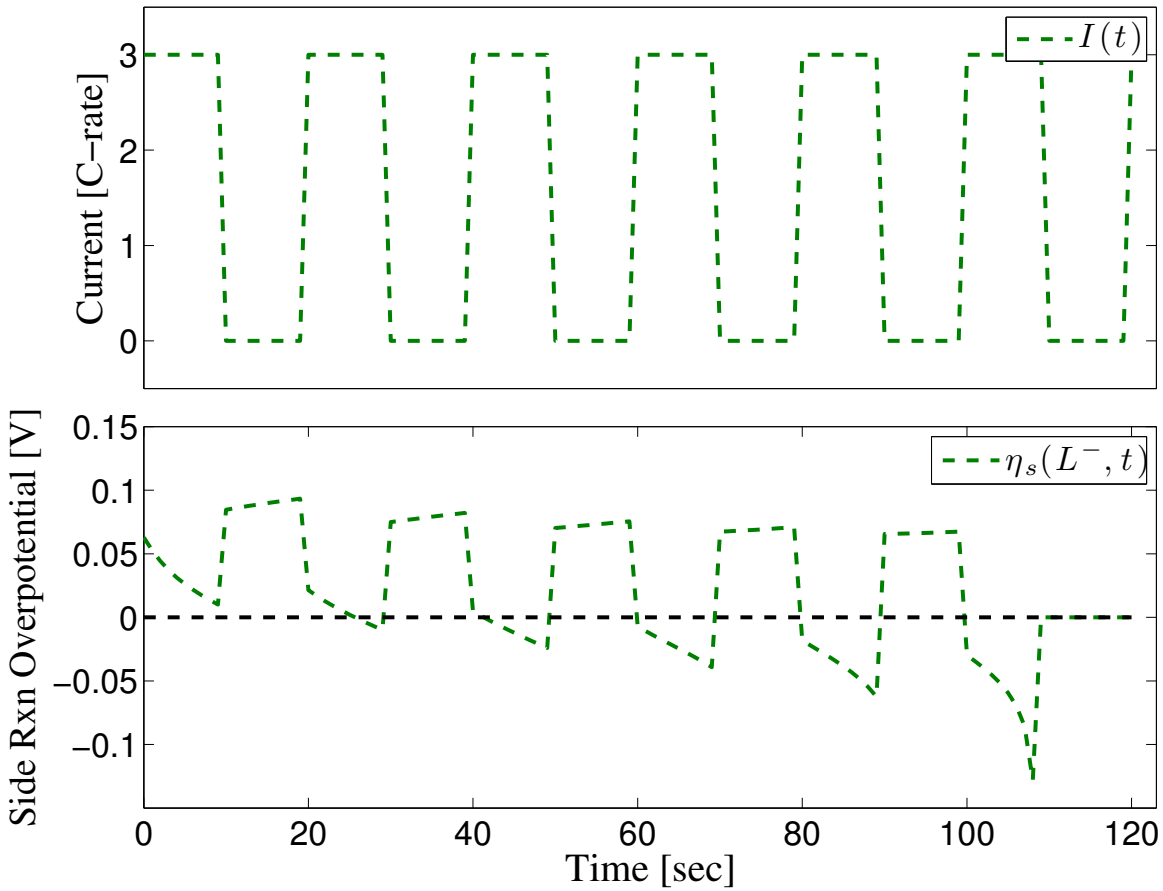
$$\beta^*[k] = \max\{\beta \in [0,1] : (x(t), z(t)) \in \mathcal{O}\}$$

Def'n: Admissible Set $\mathcal{O}$

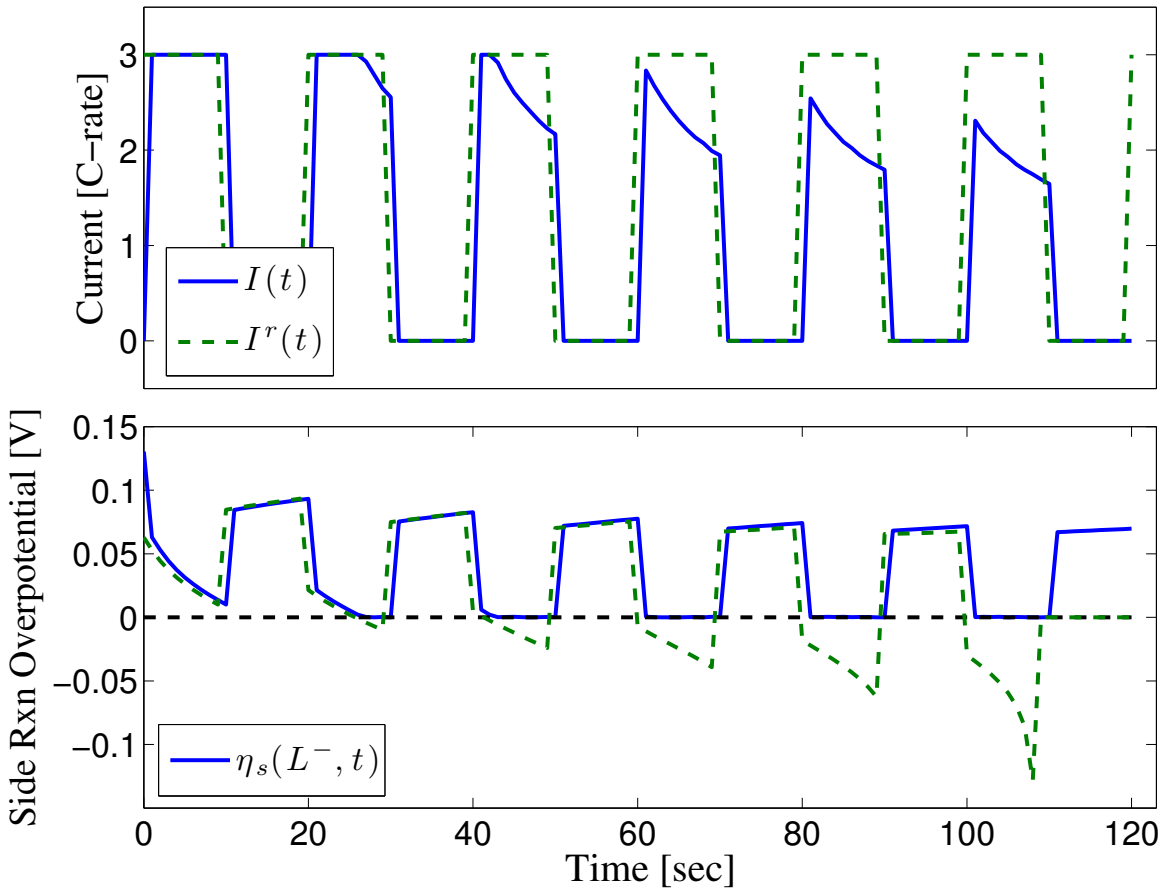
$$\mathcal{O} = \{(x(t), z(t)) : y(\tau) \in \mathcal{Y}, \forall \tau \in [t, t+T_s]\}$$

$$\begin{aligned} \dot{x}(t) &= f(x(t), z(t), \beta I^r) \\ 0 &= g(x(t), z(t), \beta I^r) \\ y(t) &= C_1 x(t) + C_2 z(t) + D \cdot \beta I^r + E \end{aligned}$$

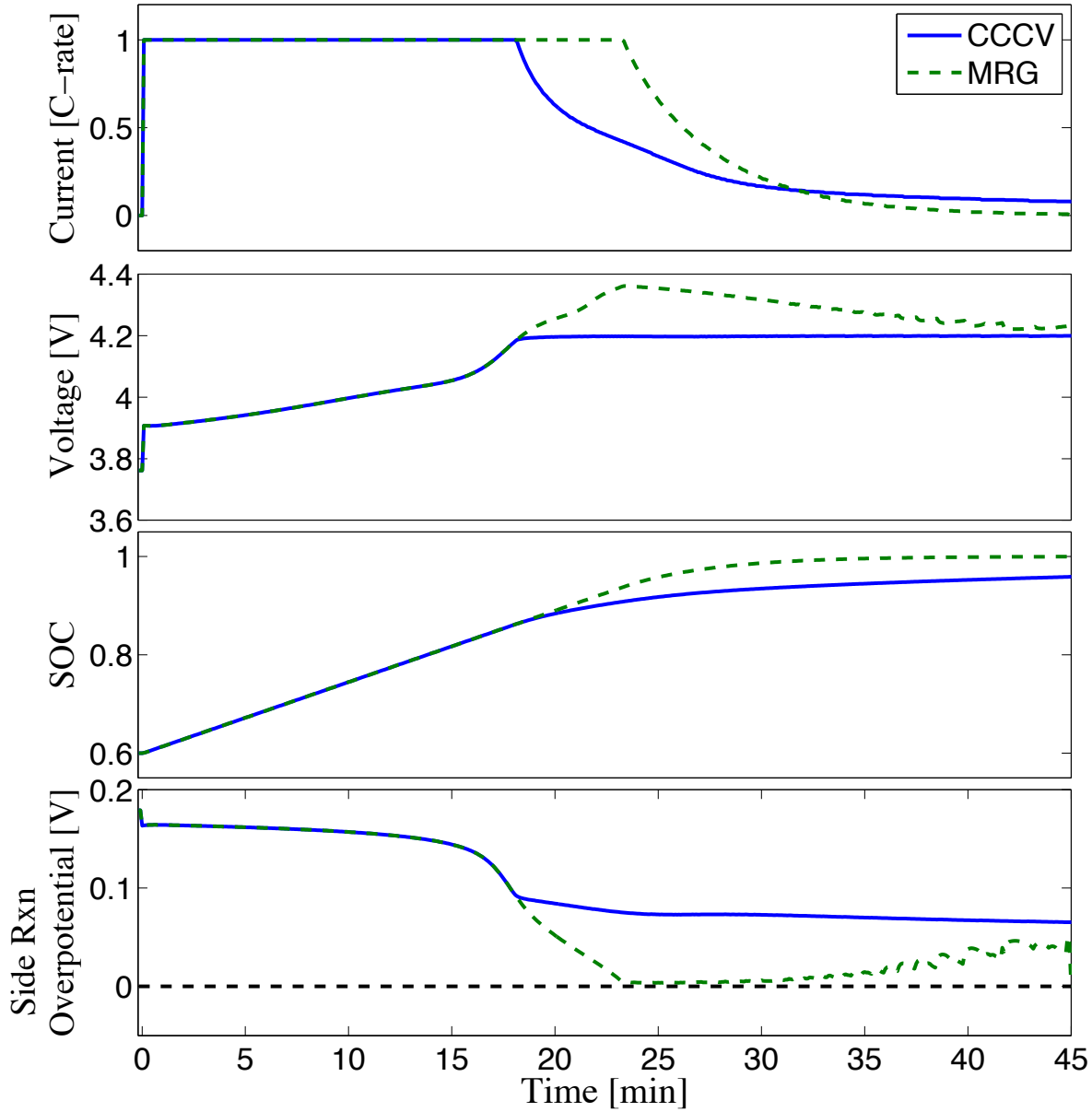
Constrained Control of EChem States



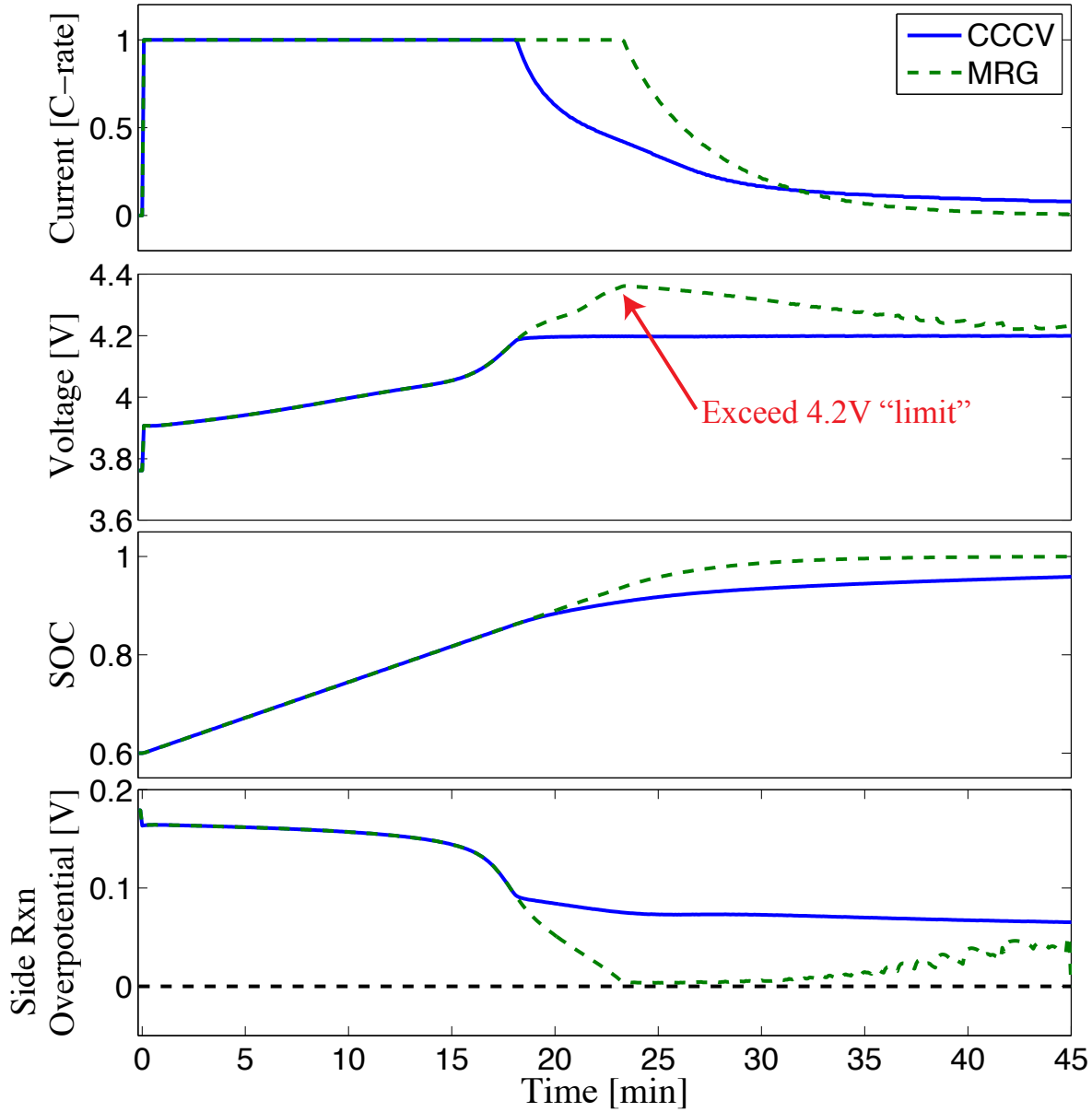
Constrained Control of EChem States



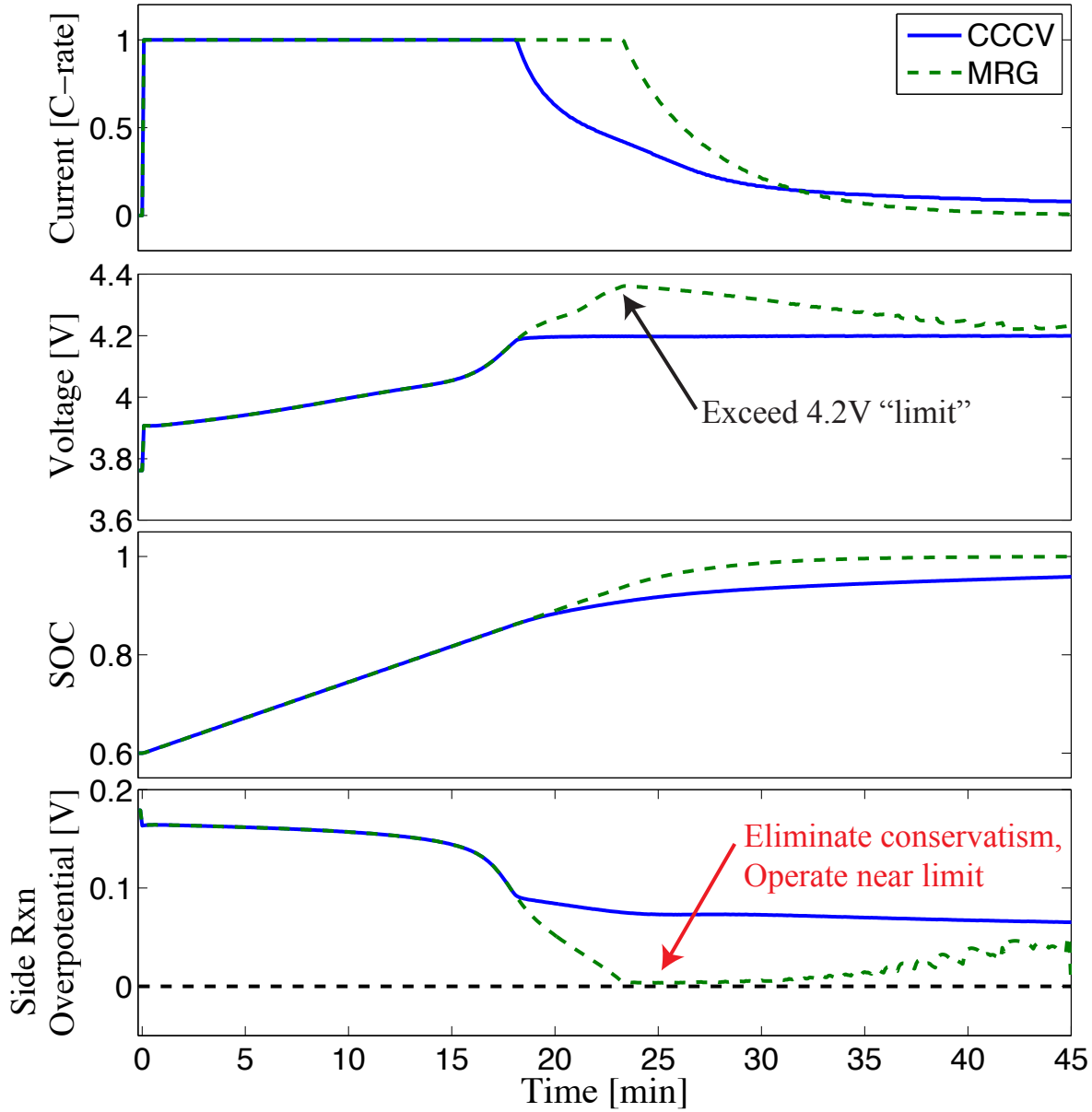
Application to Charging



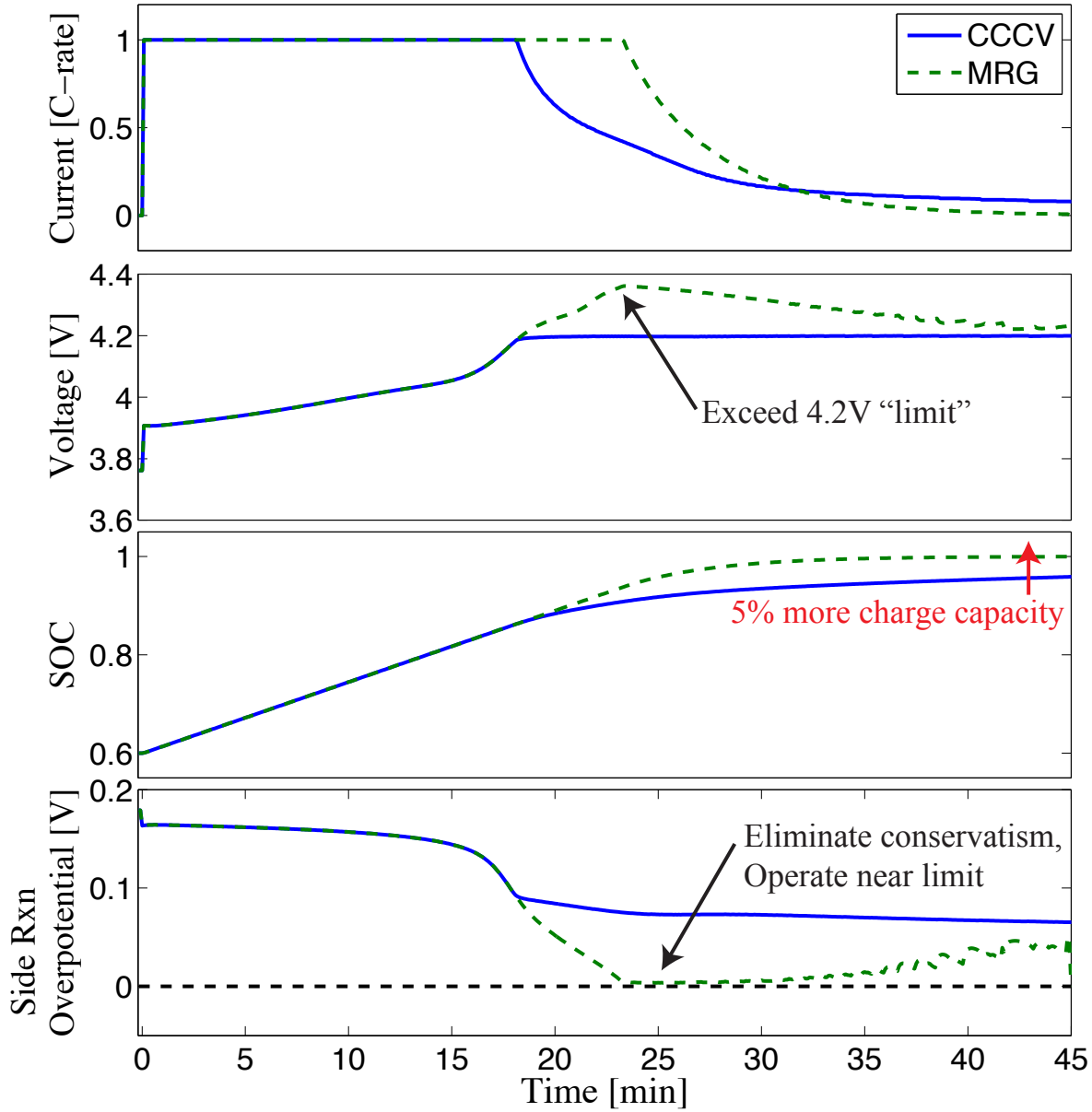
Application to Charging



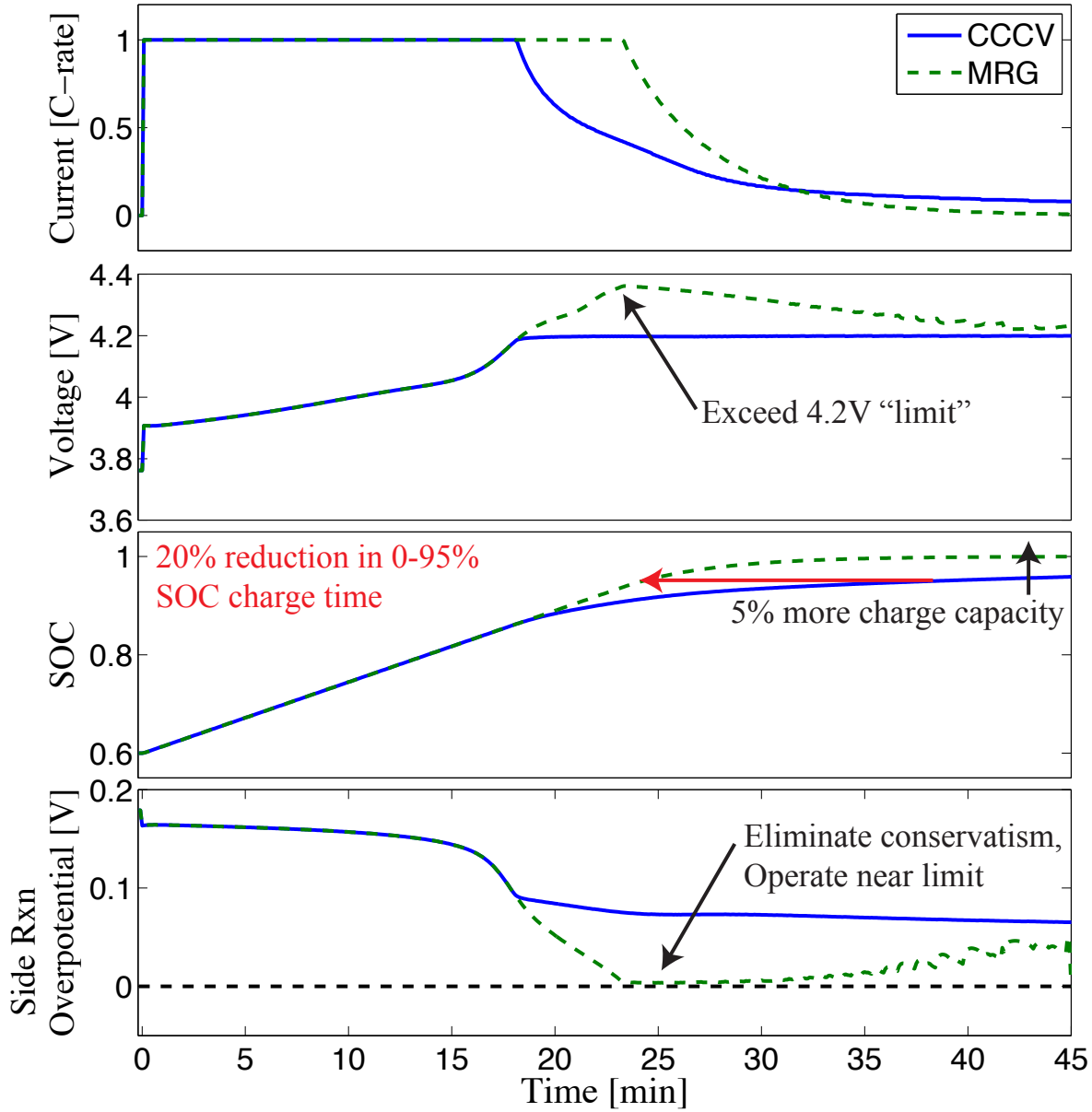
Application to Charging



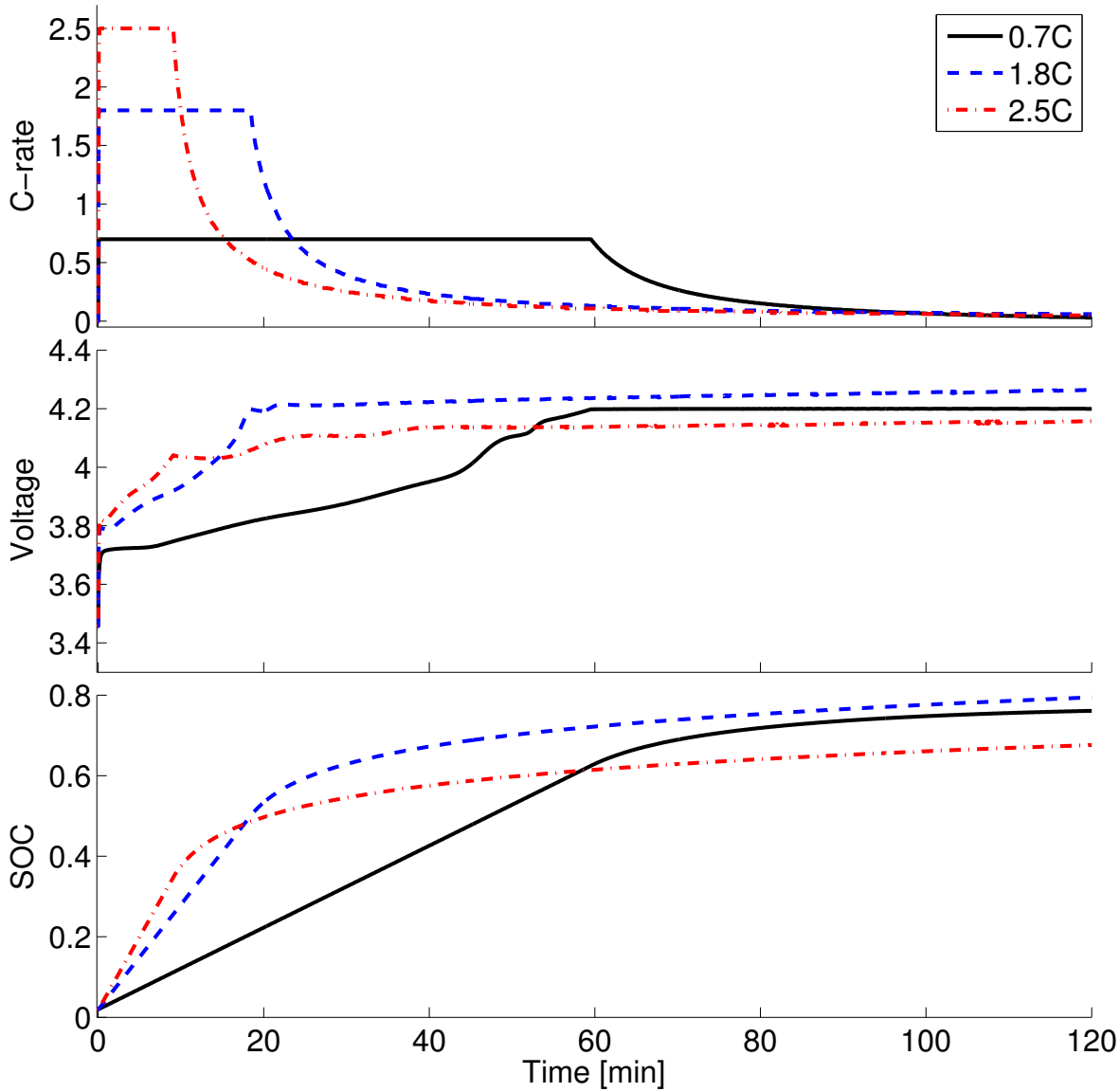
Application to Charging



Application to Charging



Fast Charging

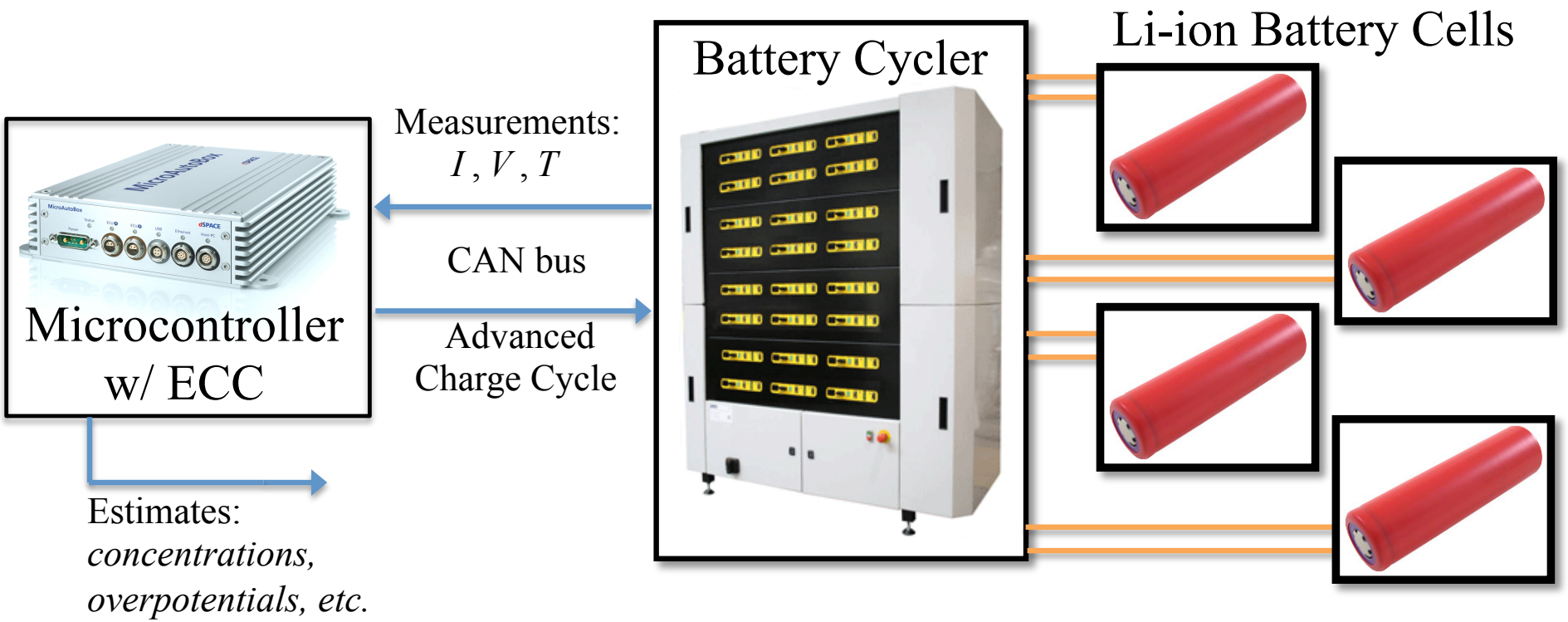


Fast charge your smartphone/EV while getting coffee

Table: Simulated fast charge times for various C-rates

Charge range	**0.7C** | Traditional	**1.8C** | ECC	**2.5C** | ECC
0-10%	7.92 min	3.17 min	2.33 min
0-20%	17.83 min	7.00 min	5.08 min
0-50%	47.33 min	18.42 min	20.50 min

Battery-in-the-Loop Test Facility



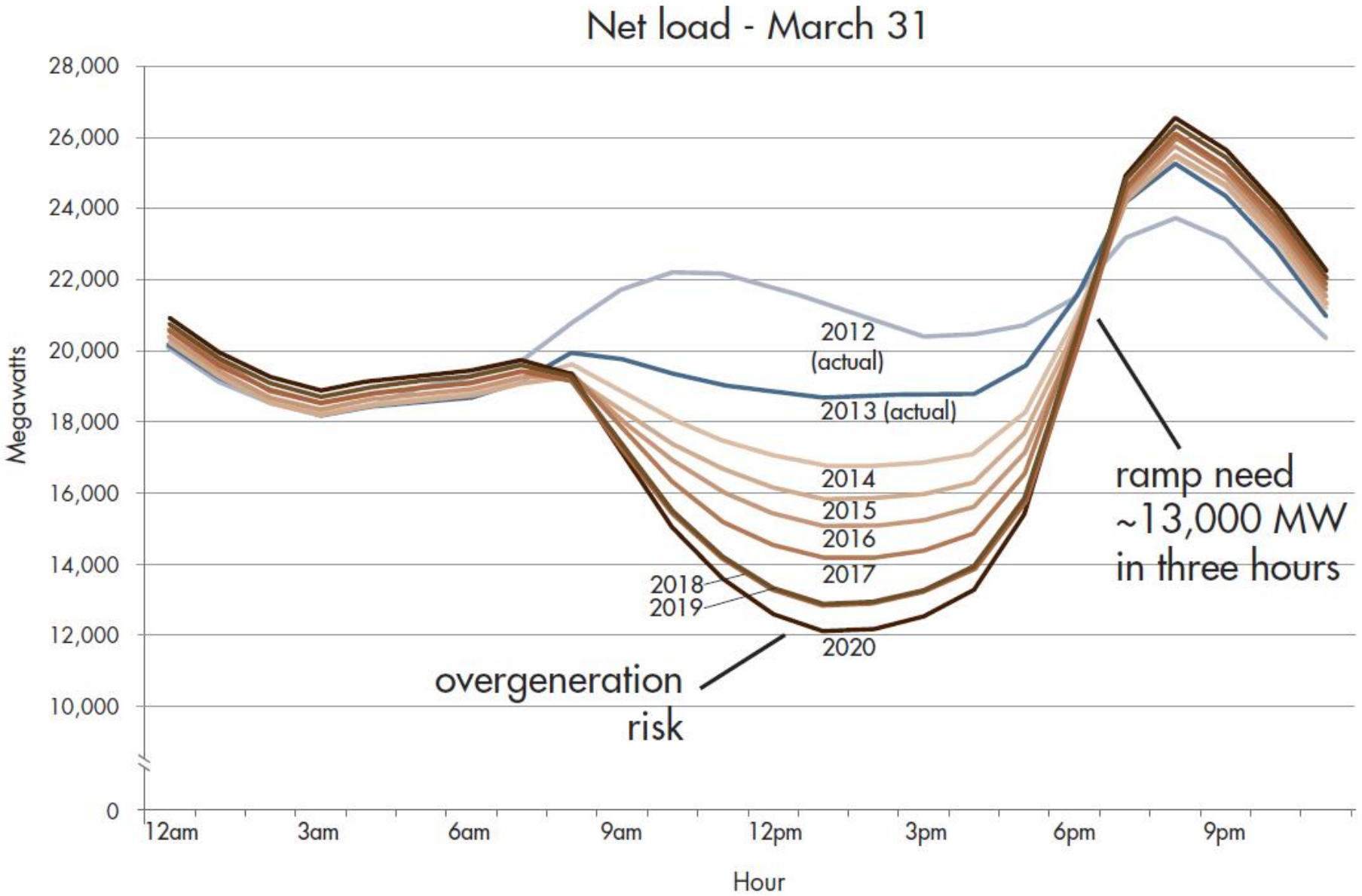
Motivation in Mobile Communication:

6.7B subscription accounts, 5.2B handsets in use,
1.7B sold worldwide in 2012

Energy Systems of Interest

Energy storage	Smart Grid-Transportation
(e.g., batteries)	(e.g., demand response)

The duck curve shows steep ramping needs and overgeneration risk



Consider Building DR



U.S. buildings produce

- 48% of carbon emissions

U.S. buildings consume

- 39% of total energy
- 71% of electricity
- 54% of natural gas



The Building Demand Response Problem

Needs:

(1) Integrate renewables, (2) enhance power system resilience & economics

The Building Demand Response Problem

Needs:

(1) Integrate renewables, (2) enhance power system resilience & economics

Obstacle: Scalability, sensing/control infrastructure

The Building Demand Response Problem

Needs:
(1) Integrate renewables, (2) enhance power system resilience & economics

Obstacle: Scalability, sensing/control infrastructure

Definition (Thermostatically Controlled Loads):
Systems controlled by on-off actuation, e.g. HVAC, water heaters, freezers

The Building Demand Response Problem

Needs:
(1) Integrate renewables, (2) enhance power system resilience & economics

Obstacle: Scalability, sensing/control infrastructure

Definition (Thermostatically Controlled Loads):
Systems controlled by on-off actuation, e.g. HVAC, water heaters, freezers

Some Interesting Facts

Thermostatically Controlled Loads (TCLs)	50% of U.S. electricity consumption is TCLs
	11% of thermostats are programmed
	Comfort is loosely coupled with control

The Building Demand Response Problem

Needs:
(1) Integrate renewables, (2) enhance power system resilience & economics

Obstacle: Scalability, sensing/control infrastructure

Definition (Thermostatically Controlled Loads):
Systems controlled by on-off actuation, e.g. HVAC, water heaters, freezers

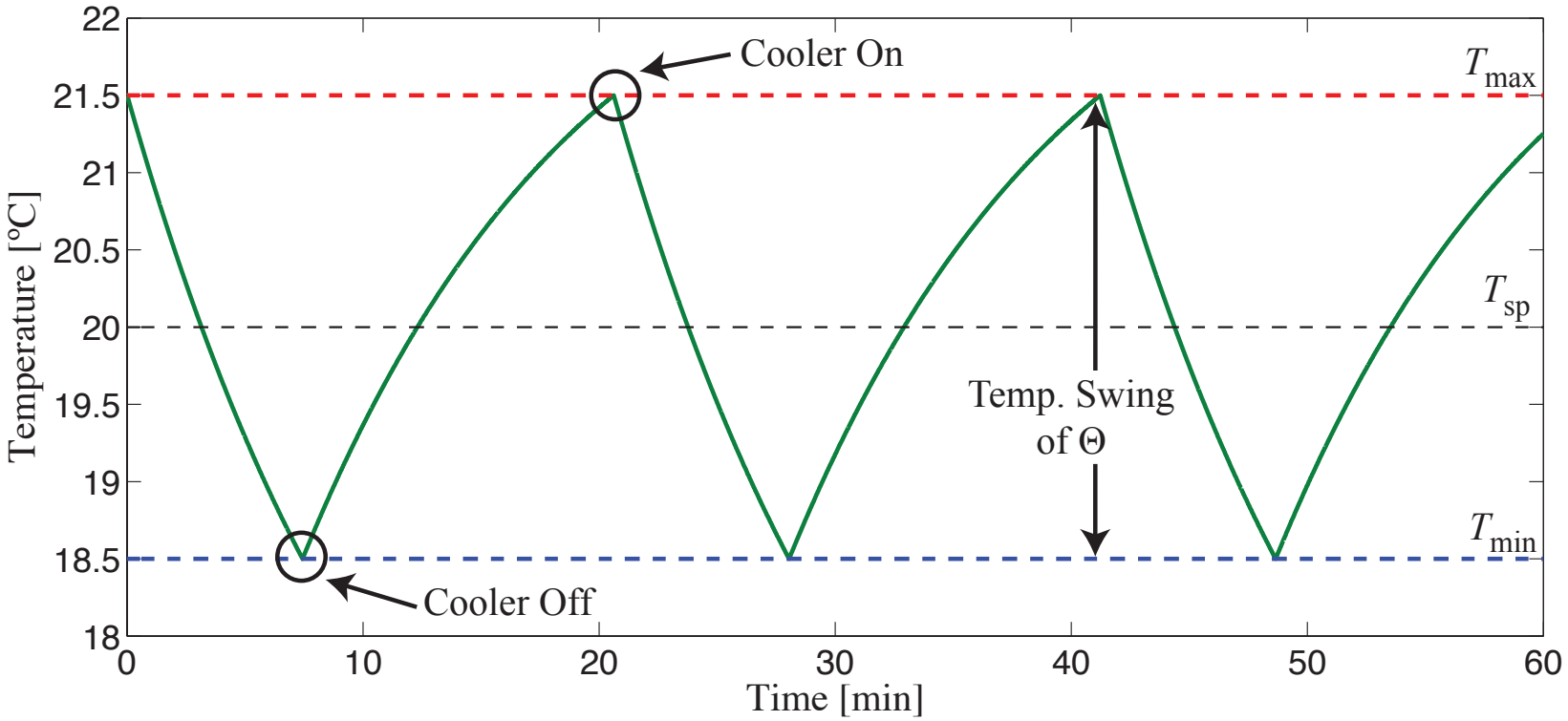
Some Interesting Facts

Thermostatically Controlled Loads (TCLs)	50% of U.S. electricity consumption is TCLs
	11% of thermostats are programmed
	Comfort is loosely coupled with control

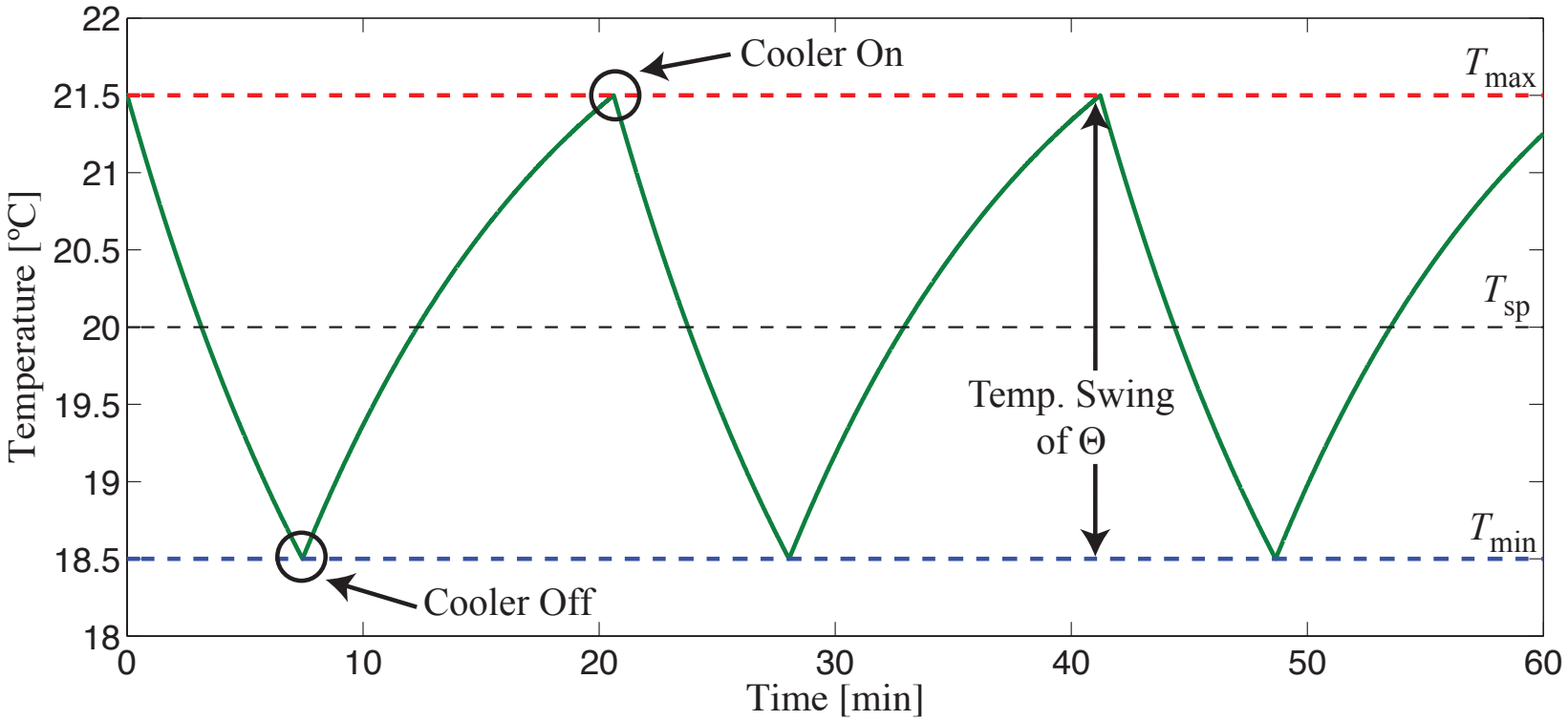
The Punchline

Exploit flexibility of TCLs for power system services

Modeling TCLs



Modeling TCLs



$$\dot{T}_i(t) = \frac{1}{R_i C_i}\left[T_\infty - T_i(t) - s_i(t) R_i P_i\right], \quad i = 1, 2, \ldots, N$$

$$s_i \in \{0, 1\}$$

Modeling Aggregated TCLs

Main Idea: Convert 1000+ ODEs into two coupled linear PDEs

Modeling Aggregated TCLs

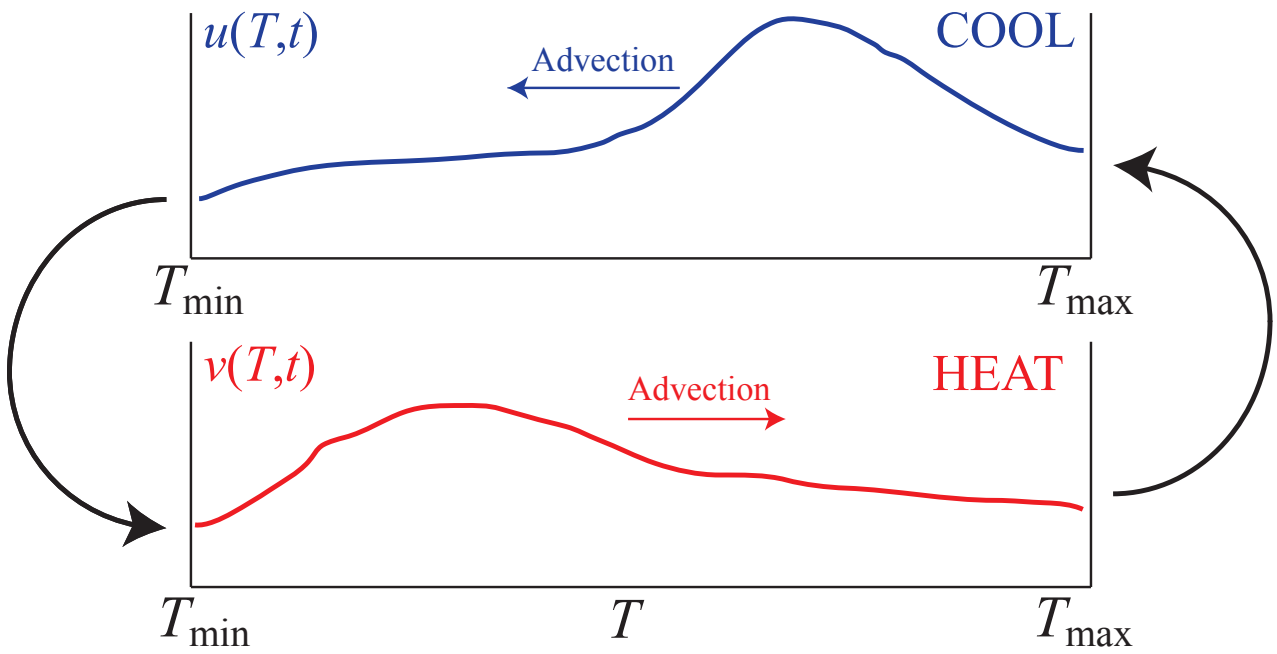
Main Idea: Convert 1000+ ODEs into two coupled linear PDEs

$u(T,t)$	# TCLs / °C, in COOL state, @ temp T, time t
$v(T,t)$	# TCLs / °C, in HEAT state, @ temp T, time t

Modeling Aggregated TCLs

Main Idea: Convert 1000+ ODEs into two coupled linear PDEs

$u(T,t)$	# TCLs / °C, in COOL state, @ temp T, time t
$v(T,t)$	# TCLs / °C, in HEAT state, @ temp T, time t



Modeling Aggregated TCLs

Main Idea: Convert 1000+ ODEs into two coupled linear PDEs

$u(T,t)$	# TCLs / °C, in COOL state, @ temp T, time t
$v(T,t)$	# TCLs / °C, in HEAT state, @ temp T, time t

Flux of TCLs in HEAT state:

#TCLs / sec

$$\psi(T,t) = v(T,t)\frac{dT}{dt}(t) = \frac{1}{RC}\left[T_\infty - T(t)\right]v(T,t)$$

Modeling Aggregated TCLs

Main Idea: Convert 1000+ ODEs into two coupled linear PDEs

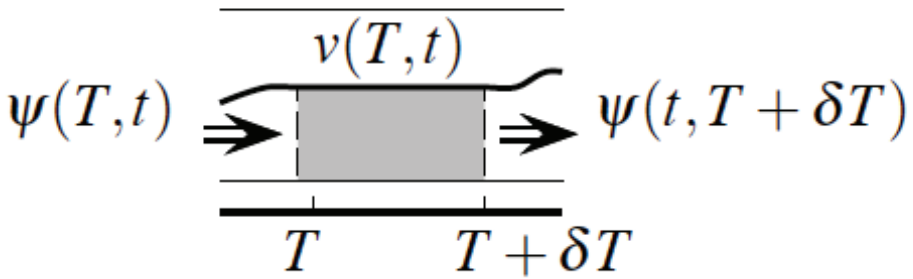
$u(T,t)$	# TCLs / °C, in COOL state, @ temp T, time t
$v(T,t)$	# TCLs / °C, in HEAT state, @ temp T, time t

Flux of TCLs in HEAT state:

#TCLs / sec

$$\psi(T,t) = v(T,t)\frac{dT}{dt}(t) = \frac{1}{RC}\left[T_\infty - T(t)\right] v(T,t)$$

Control volume:



Modeling Aggregated TCLs

Main Idea: Convert 1000+ ODEs into two coupled linear PDEs

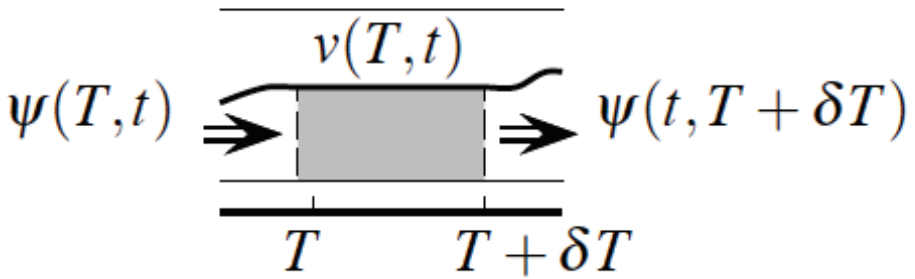
$u(T,t)$	# TCLs / °C, in COOL state, @ temp T, time t
$v(T,t)$	# TCLs / °C, in HEAT state, @ temp T, time t

Flux of TCLs in HEAT state:

#TCLs / sec

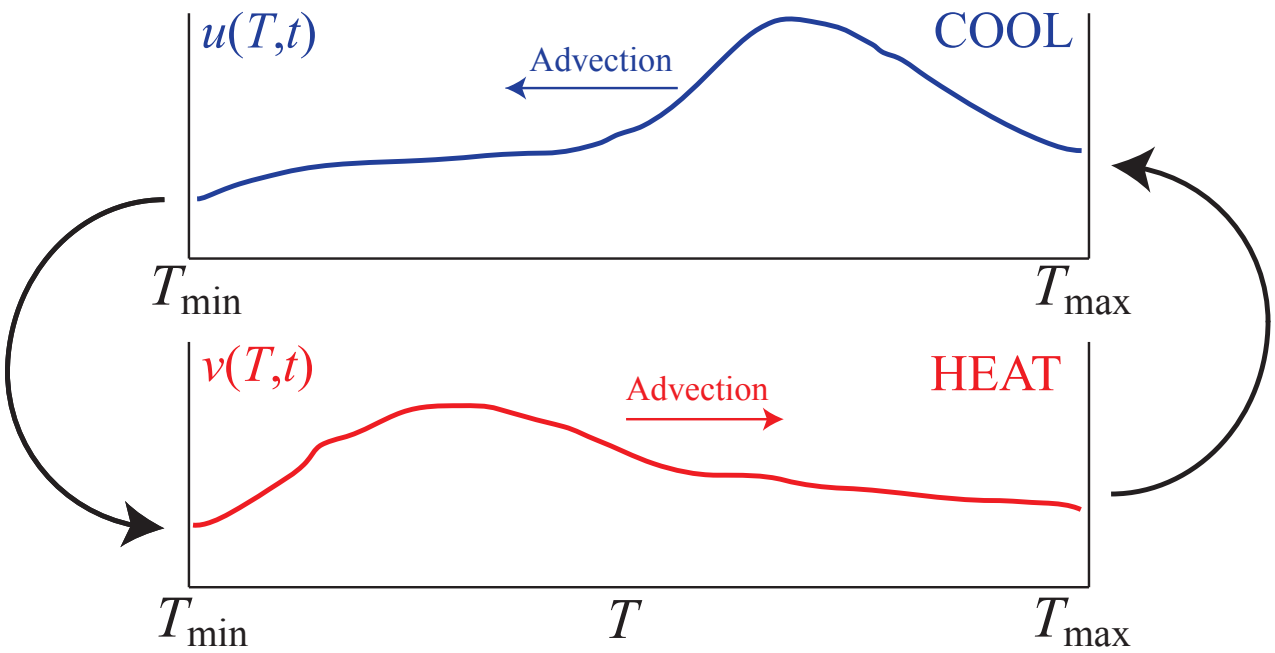
$$\psi(T,t) = v(T,t)\frac{dT}{dt}(t) = \frac{1}{RC}\left[T_\infty - T(t)\right] v(T,t)$$

Control volume:



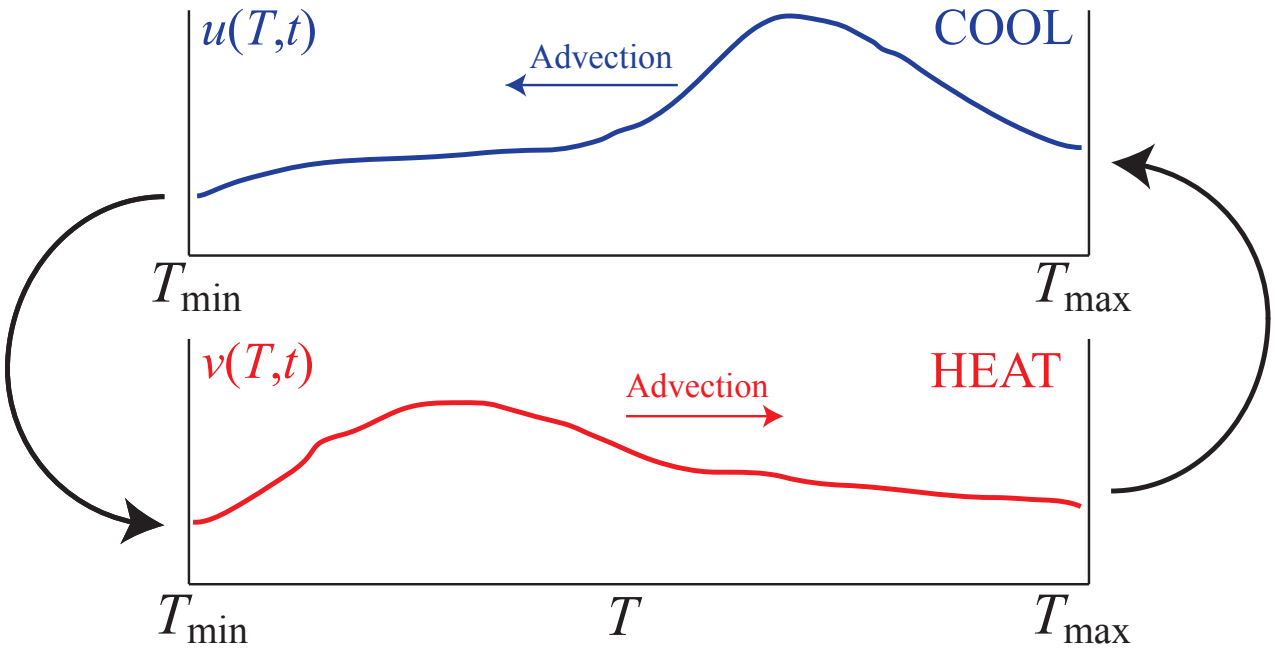
$$\begin{aligned}\frac{\partial v}{\partial t}(T,t) &= \lim_{\delta T \to 0}\left[\frac{\psi(T+\delta T,t)-\psi(T,t)}{\delta T}\right] \\ &= \frac{\partial \psi}{\partial T}(T,t) \\ &= -\frac{1}{RC}\left[T_\infty - T(t)\right]\frac{\partial v}{\partial T}(T,t) + \frac{1}{RC}v(T,t)\end{aligned}$$

PDE Model of Aggregated TCLs



Video of 1,000 TCLs

PDE Model of Aggregated TCLs



$$u_t(T,t) = \alpha\lambda(T)u_T(T,t) + \alpha u(T,t)$$

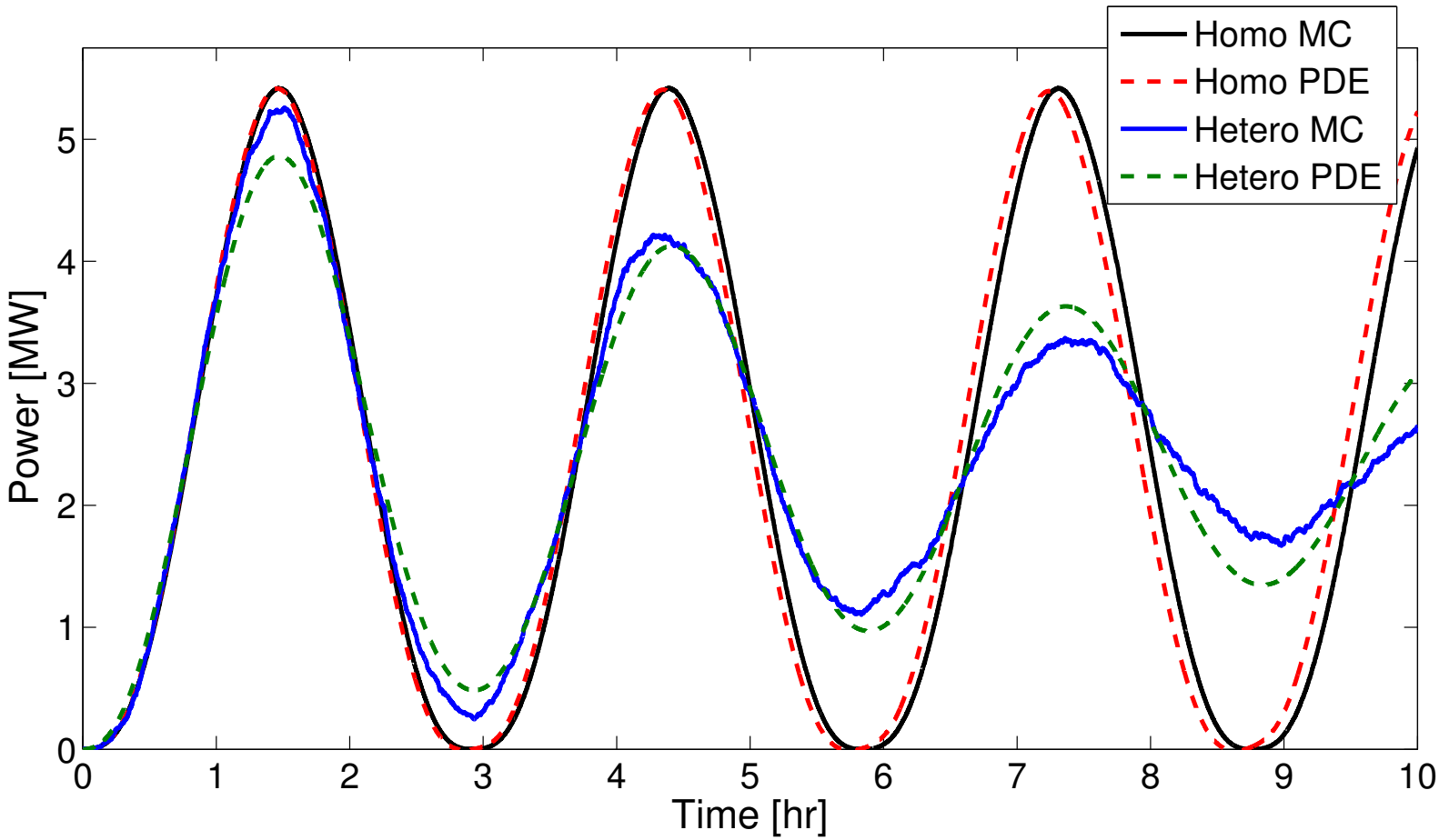
$$v_t(T,t) = -\alpha\mu(T)v_T(T,t) + \alpha v(T,t)$$

$$u(T_{\max},t) = q_1 v(T_{\max},t)$$

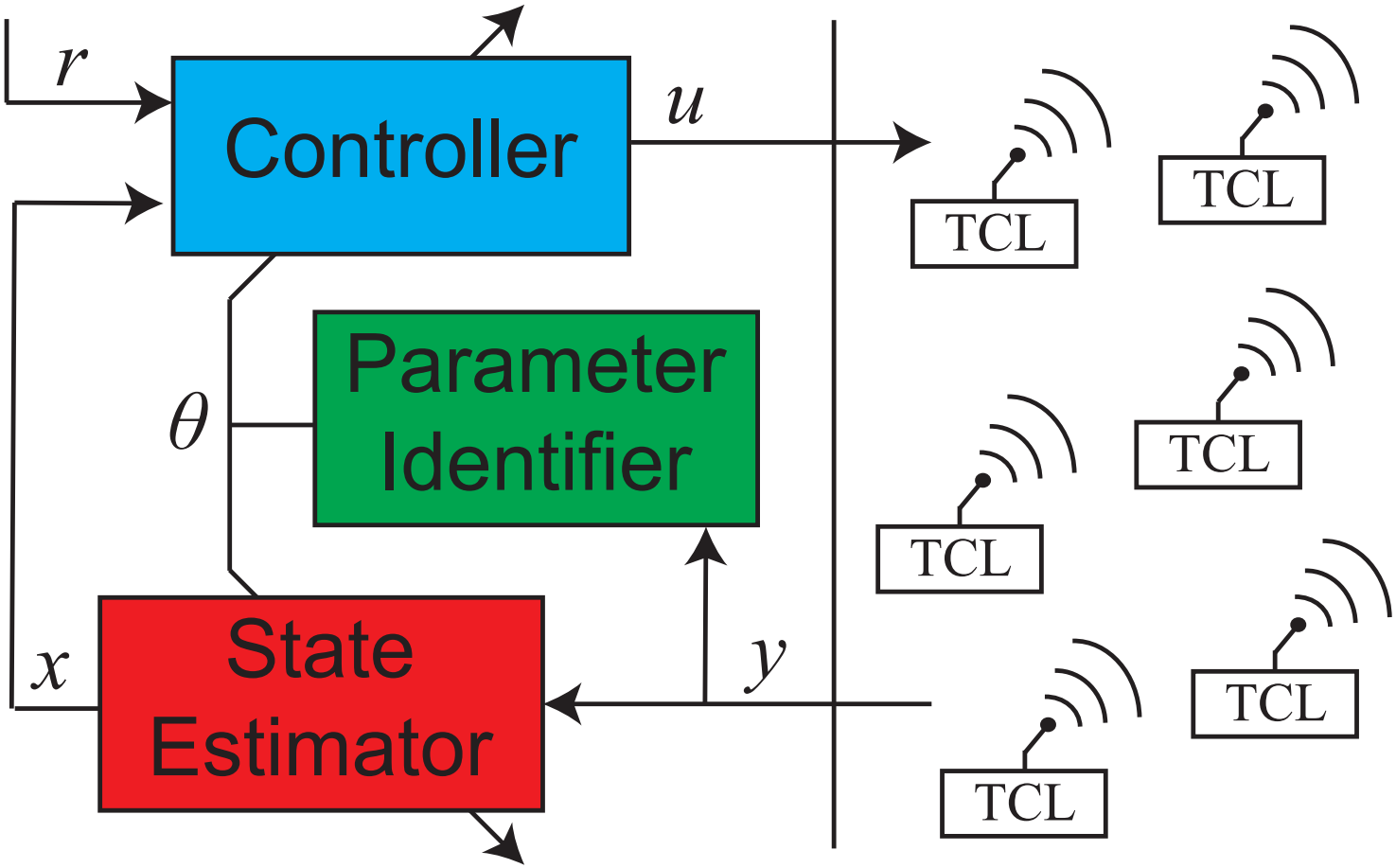
$$v(T_{\min},t) = q_2 u(T_{\min},t)$$

Video of 1,000 TCLs

Model Comparison



Feedback Control System



PDE State Estimator

Heterogeneous PDE Model: (u, v)

$$
\begin{aligned}
u_t(x,t) &= \alpha\lambda(x)u_x + \alpha u + \beta u_{xx} \\
u_x(0,t) &= -v_x(0,t) \\
u(1,t) &= q_1 v(1,t)
\end{aligned}
$$

$$
\begin{aligned}
v_t(x,t) &= -\alpha\mu(x)v_x + \alpha v + \beta v_{xx} \\
v(0,t) &= q_2 u(0,t) \\
v_x(1,t) &= -u_x(1,t)
\end{aligned}
$$

Measurements?

- $u(0,t), v(1,t)$
- $u_x(1,t), v_x(0,t)$

Each TCL communicates with central authority only when switching HEAT/COOL state.

PDE State Estimator

Estimator: $(\hat{u}, \hat{v})$

$$
\begin{aligned}
\hat{u}_t(x,t) &= \alpha\lambda(x)\hat{u}_x + \alpha\hat{u} + \beta\hat{u}_{xx} + p_1(x)\left[u(0,t) - \hat{u}(0,t)\right] \\
\hat{u}_x(0,t) &= -v_x(0,t) + p_{10}\left[u(0,t) - \hat{u}(0,t)\right] \\
\hat{u}(1,t) &= q_1 v(1,t)
\end{aligned}
$$

$$
\begin{aligned}
\hat{v}_t(x,t) &= -\alpha\mu(x)\hat{v}_x + \alpha\hat{v} + \beta\hat{v}_{xx} + p_2(x)\left[v(1,t) - \hat{v}(1,t)\right] \\
\hat{v}(0,t) &= q_2 u(0,t) \\
\hat{v}_x(1,t) &= -u_x(1,t) + p_{20}\left[v(1,t) - \hat{v}(1,t)\right]
\end{aligned}
$$

PDE State Estimator

Estimation Error Dynamics: $(\tilde{u}, \tilde{v}) = (u - \hat{u}, v - \hat{v})$

$$
\begin{aligned}
\tilde{u}_t(x,t) &= \alpha\lambda(x)\tilde{u}_x + \alpha\tilde{u} + \beta\tilde{u}_{xx} - p_1(x)\tilde{u}(0,t) \\
\tilde{u}_x(0,t) &= -p_{10}\tilde{u}(0,t) \\
\tilde{u}(1,t) &= 0
\end{aligned}
$$

$$
\begin{aligned}
\tilde{v}_t(x,t) &= -\alpha\mu(x)\tilde{v}_x + \alpha\tilde{v} + \beta\tilde{v}_{xx} - p_2(x)\tilde{v}(1,t) \\
\tilde{v}(0,t) &= 0 \\
\tilde{v}_x(1,t) &= -p_{20}\tilde{v}(1,t)
\end{aligned}
$$

PDE State Estimator

Estimation Error Dynamics: $(\tilde{u}, \tilde{v}) = (u - \hat{u}, v - \hat{v})$

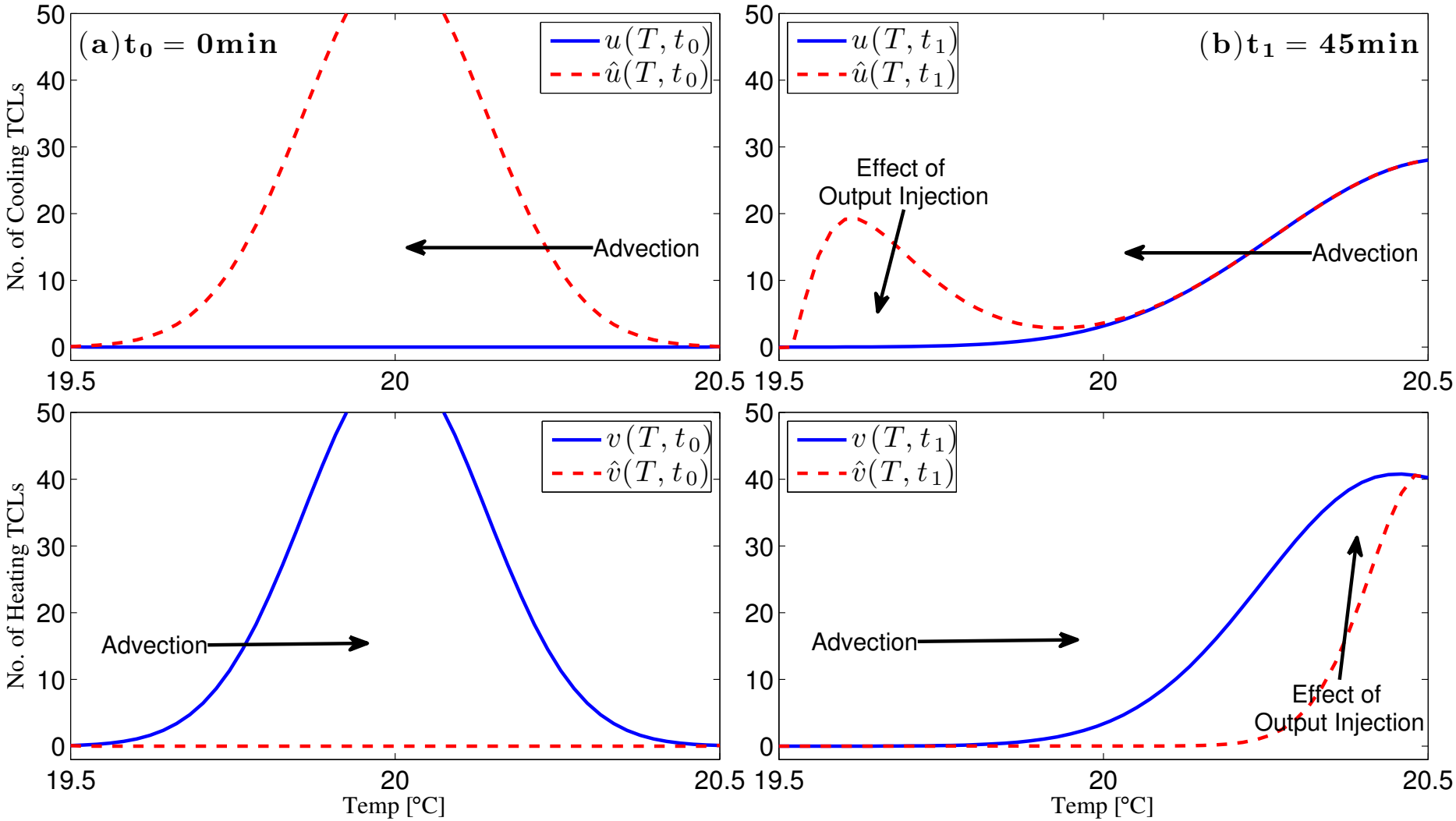
$$
\begin{aligned}
\tilde{u}_t(x,t) &= \alpha\lambda(x)\tilde{u}_x + \alpha\tilde{u} + \beta\tilde{u}_{xx} - p_1(x)\tilde{u}(0,t) \\
\tilde{u}_x(0,t) &= -p_{10}\tilde{u}(0,t) \\
\tilde{u}(1,t) &= 0 \\
\\
\tilde{v}_t(x,t) &= -\alpha\mu(x)\tilde{v}_x + \alpha\tilde{v} + \beta\tilde{v}_{xx} - p_2(x)\tilde{v}(1,t) \\
\tilde{v}(0,t) &= 0 \\
\tilde{v}_x(1,t) &= -p_{20}\tilde{v}(1,t)
\end{aligned}
$$

Goal: Design estimation gains:

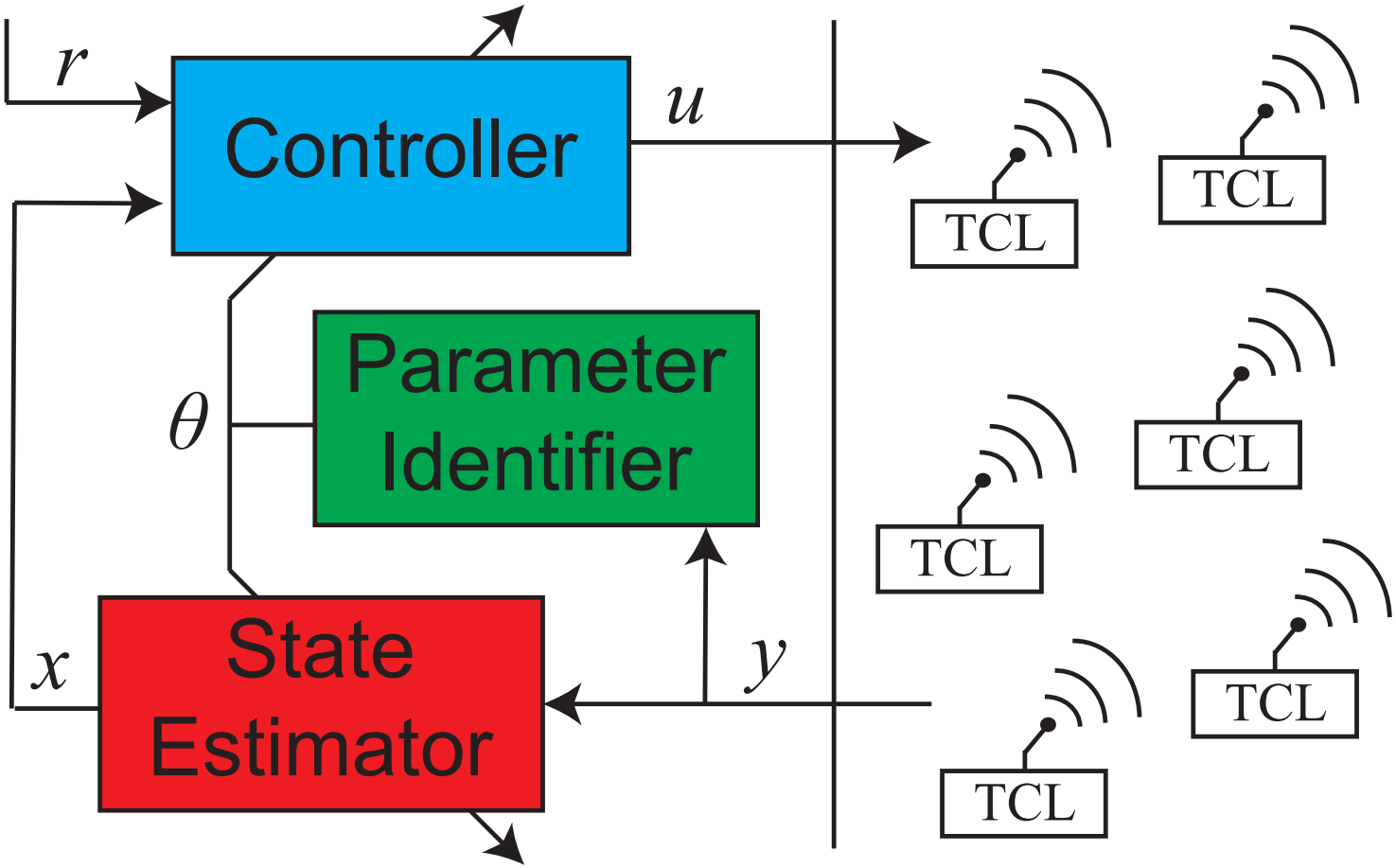
- $p_1(x), p_2(x) : (0,1) \to \mathbb{R}$
- $p_{10}, p_{20} \in \mathbb{R}$

such that $(\tilde{u}, \tilde{v}) = (0,0)$ is exponentially stable

Simulations



Feedback Control System



Parameter Identification

Uncertain parameters

$$u_t(x,t) = \alpha\lambda(x)u_x + \alpha u + \beta u_{xx} \qquad v_t(x,t) = -\alpha\mu(x)v_x + \alpha v + \beta v_{xx}$$
$$u_x(0,t) = -v_x(0,t) \qquad v(0,t) = q_2 u(0,t)$$
$$u(1,t) = q_1 v(1,t) \qquad v_x(1,t) = -u_x(1,t)$$

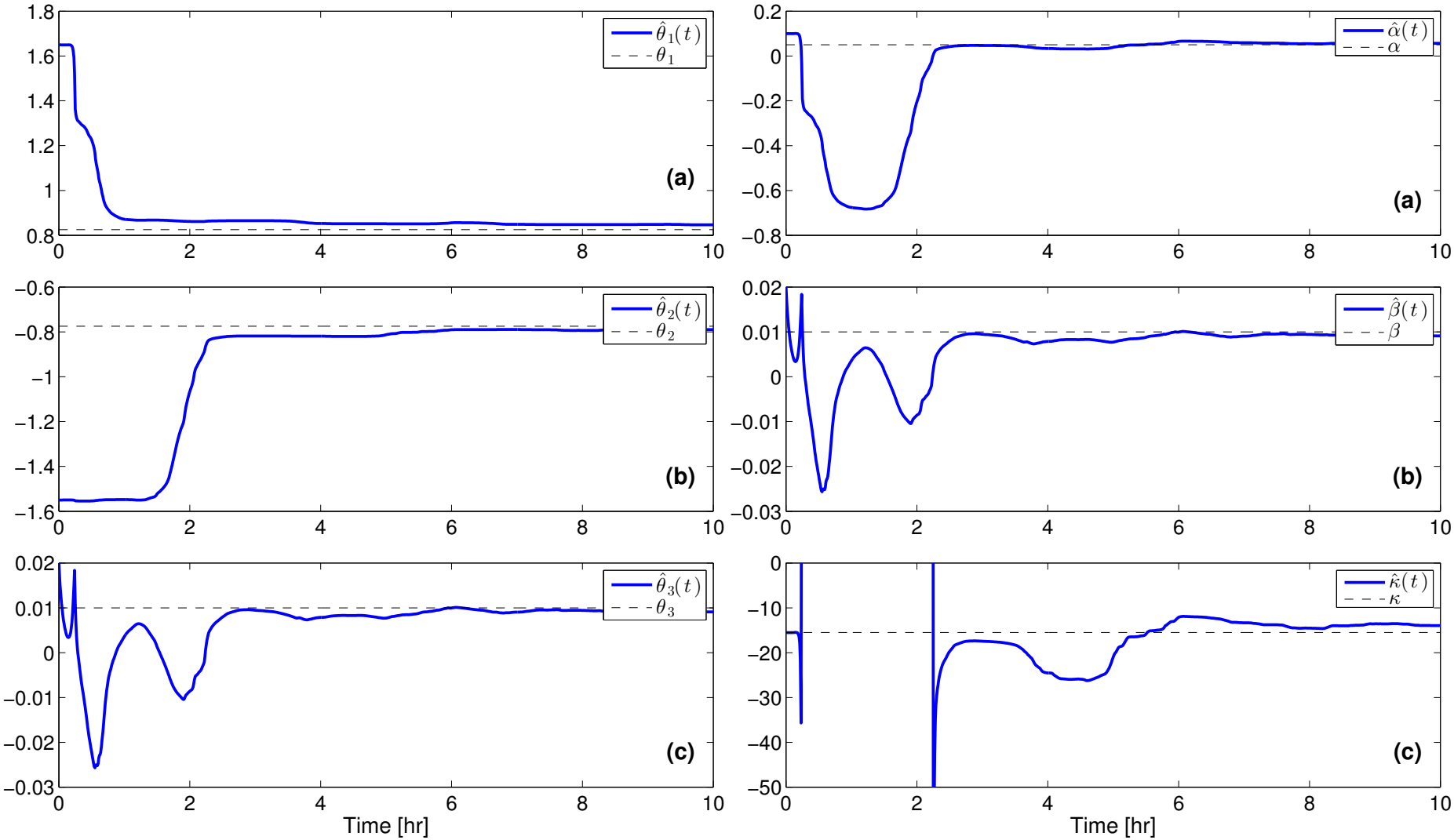
$$P(t) = \frac{\overline{P}}{\eta}\int_0^1 u(x,t)dx$$

Assumptions:

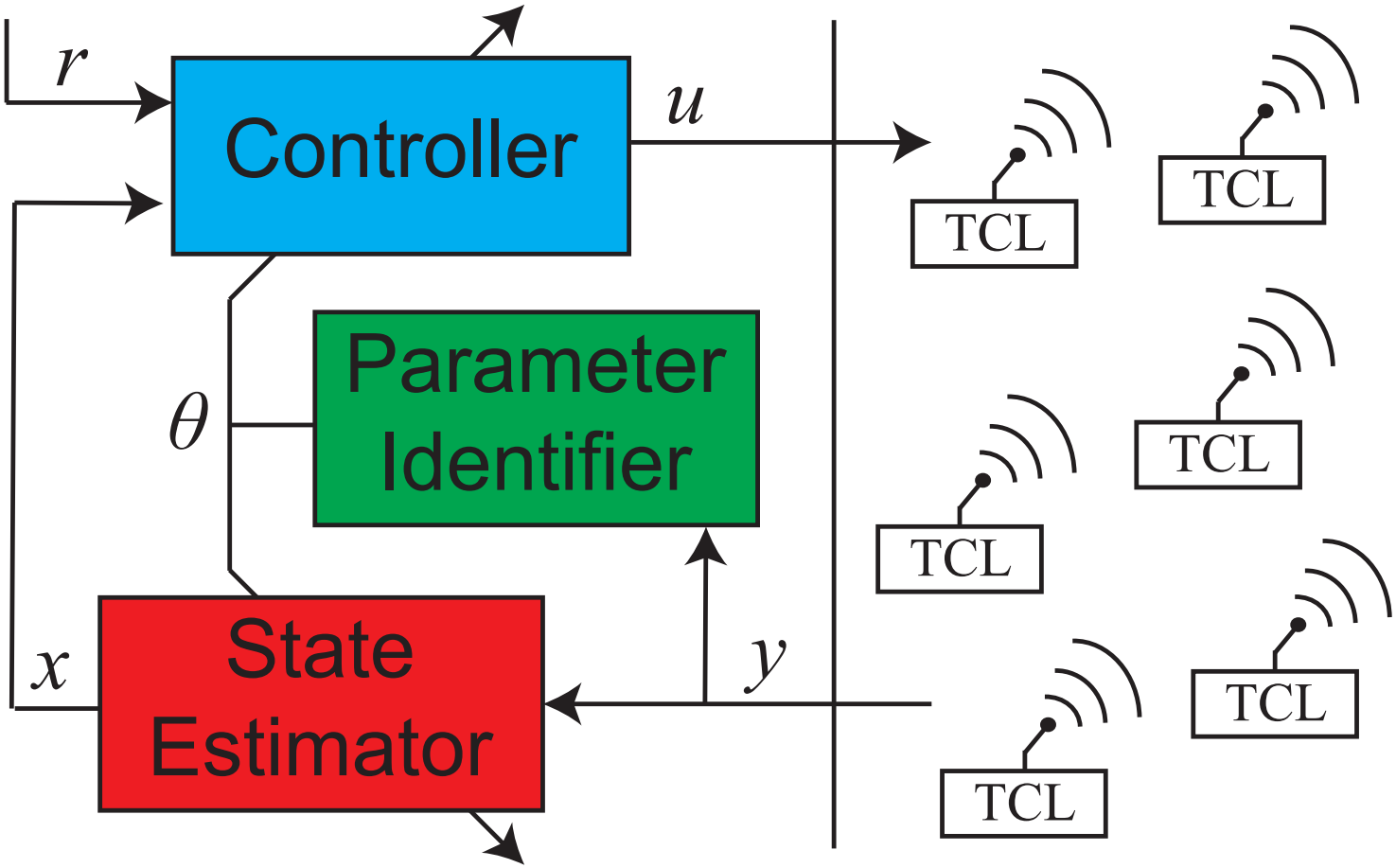
1. Aggregate Power $P(t)$ is measured
2. No. of TCLs switching $u(0,t), u(1,t), u_x(0,t), u_x(1,t)$ is measured

Simulations

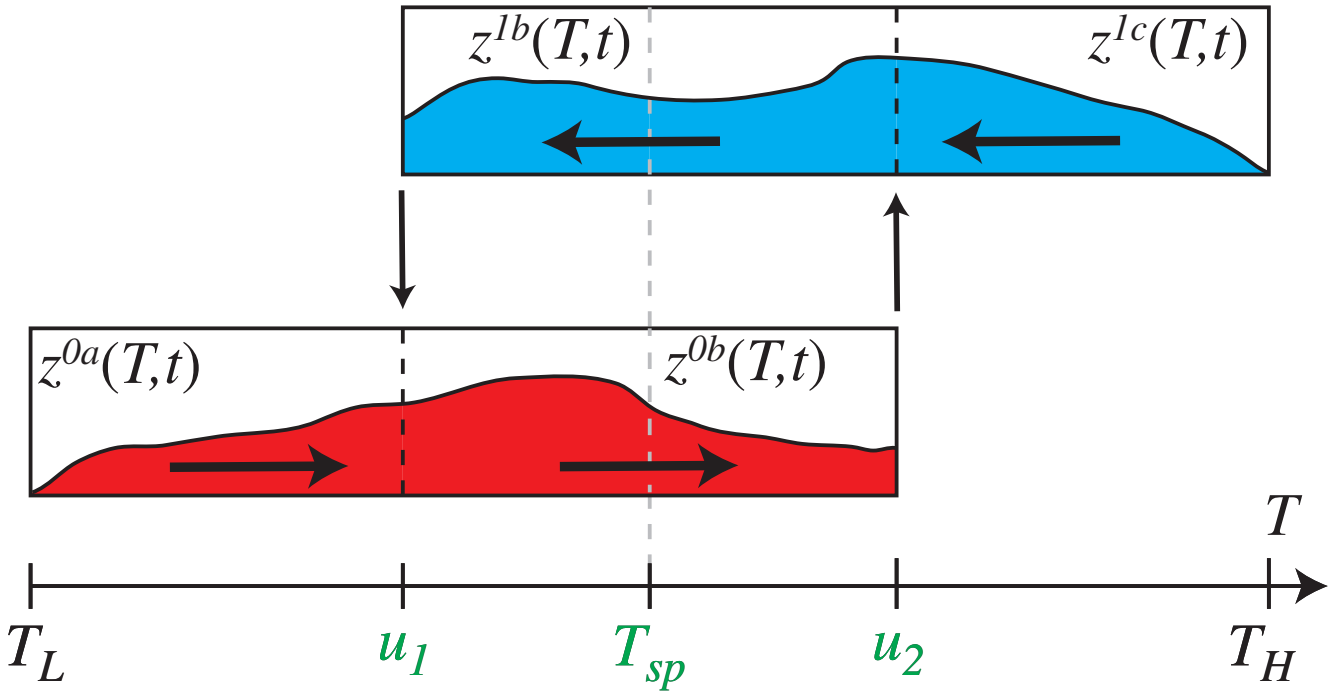
Identified from Population of 1,000 Heterogeneous TCLs



Feedback Control System



Set-point / Deadband Control

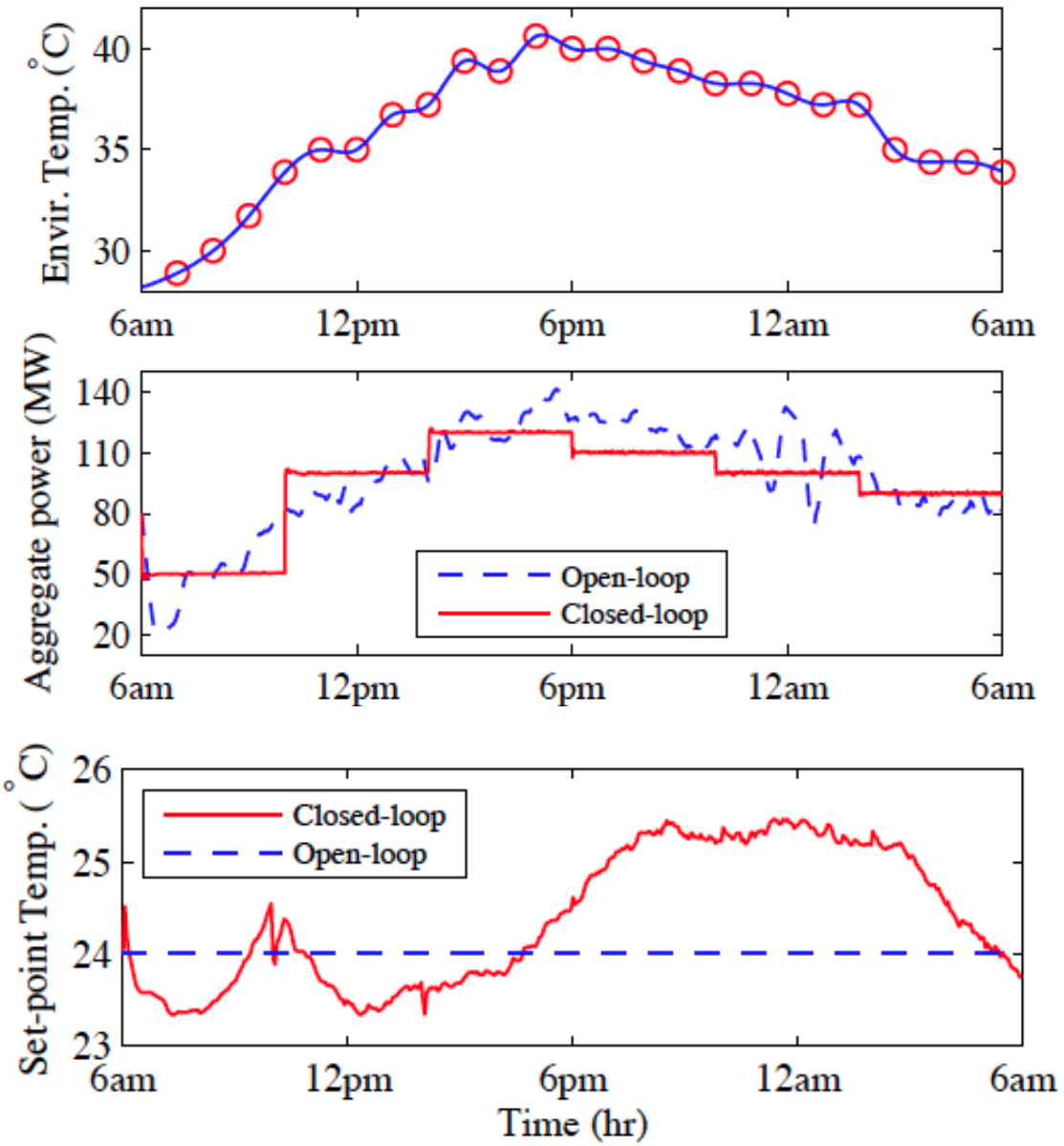


$$z_t^{1j}(T,t) = \alpha\lambda(T)z_T^{1j}(T,t) + \alpha z^{1j}(T,t), \qquad j \in \{b,c\}$$
$$z_t^{0j}(T,t) = -\alpha\mu(T)z_T^{0j}(T,t) + \alpha z^{0j}(T,t), \qquad j \in \{a,b\}$$

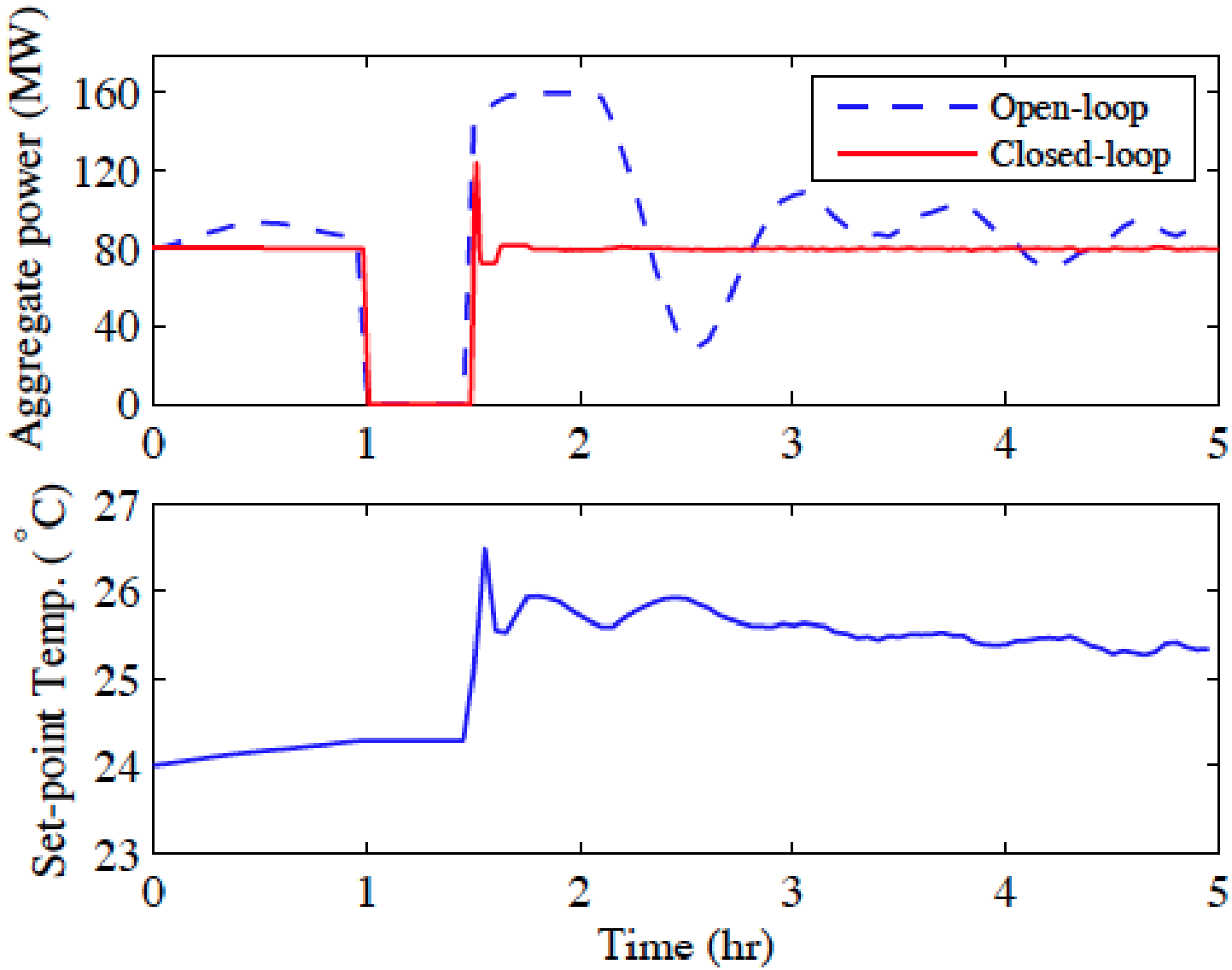
with boundary conditions

$$z^{0a}(T_L,t) = 0, \qquad z^{0b}(u_1,t) = z^{0a}(u_1,t) + z^{1b}(u_1,t),$$
$$z^{1b}(u_2,t) = z^{1c}(u_2,t) + z^{0b}(u_2,t), \qquad z^{1c}(T_H,t) = 0$$

Aggregate Power Control



Aggregate Power Control



UC San Diego Campus: A Living Laboratory



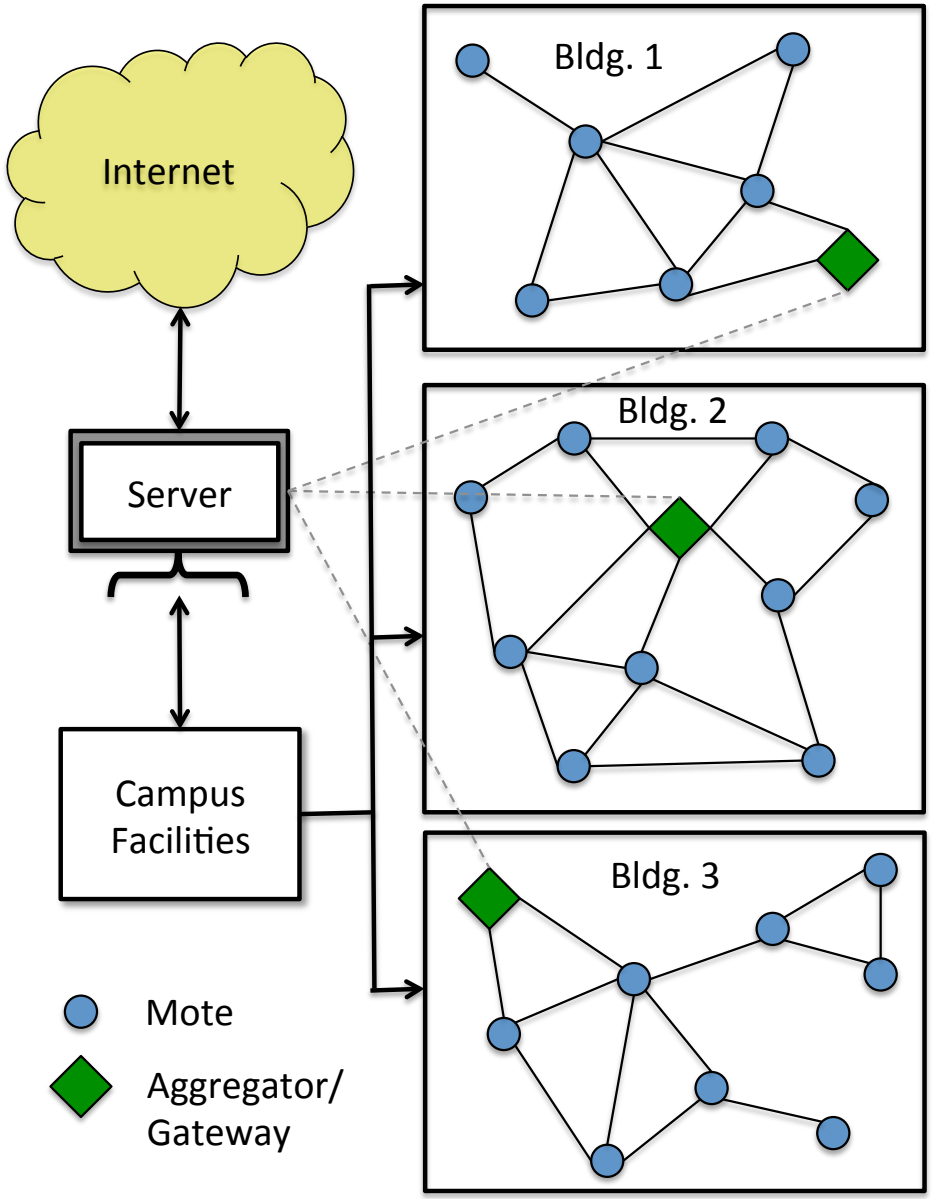
UC San Diego Campus: A Living Laboratory

Goal: DR for Bldg Energy Mgmt

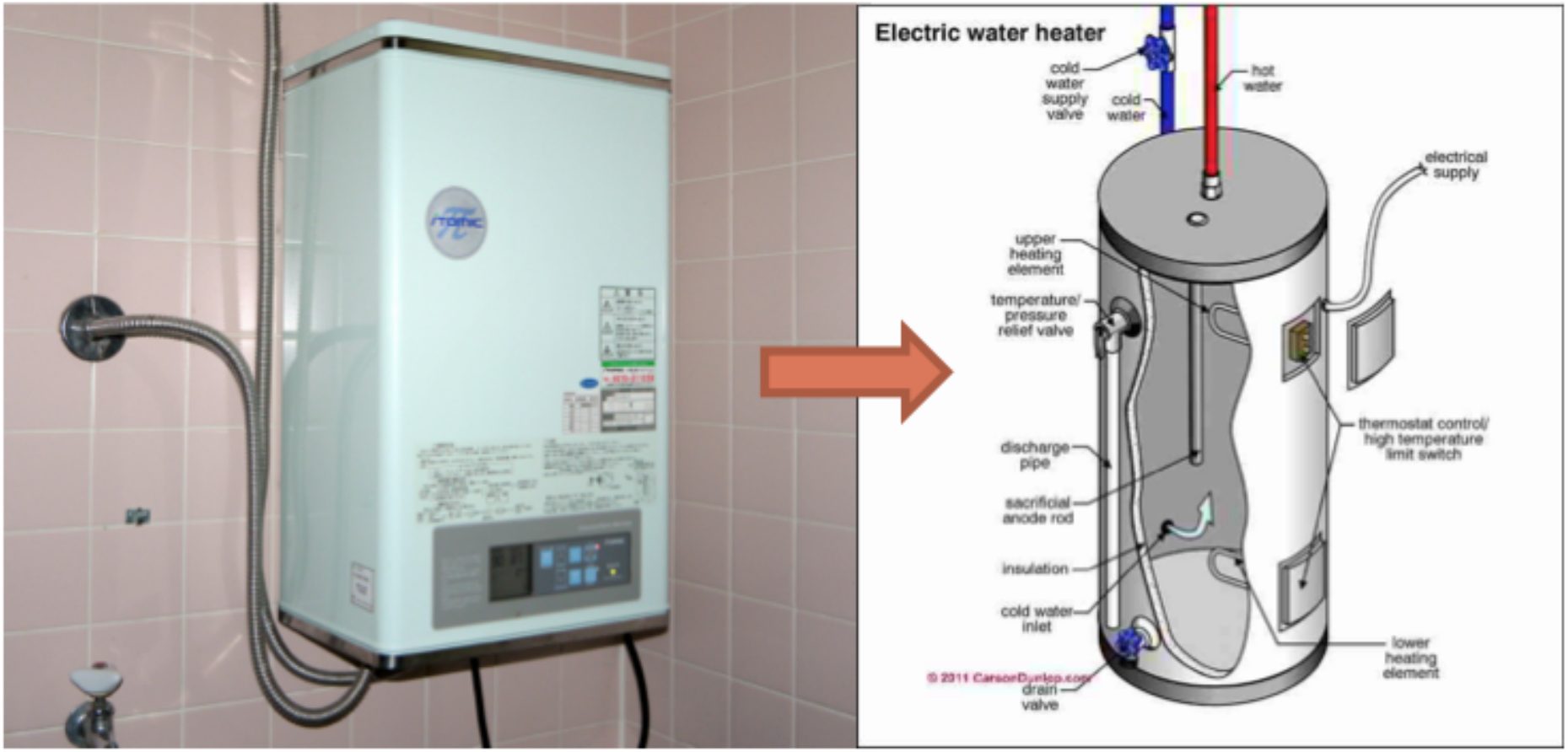
1. Deploy wireless sensor network
2. Model/estimator verification
3. Control design
4. Campus implementation



Sensor Nodes (Temp & Humidity)



Aggregating Electric Water Heaters (EWH) | EDF



Energy Systems of Interest

Energy storage	Smart Grid-Transportation
(e.g., batteries)	(e.g., demand response)

The Vehicle-Grid Integration (VGI) Problem

Needs: Resilient and sustainable energy/transportation infrastructure

Obstacle: Unprecedented constraints and demands on grid

Some Interesting Facts

Plug-in Electric Vehicles (PEVs)	Potentially dispatchable loads
	"carbitrage" opportunity
	Firm variable renewables

The Punchline

Exploit flexibility of PEV charging to enhance efficiency across infrastructures

Government Initiatives



Vehicle-Grid Integration Roadmap

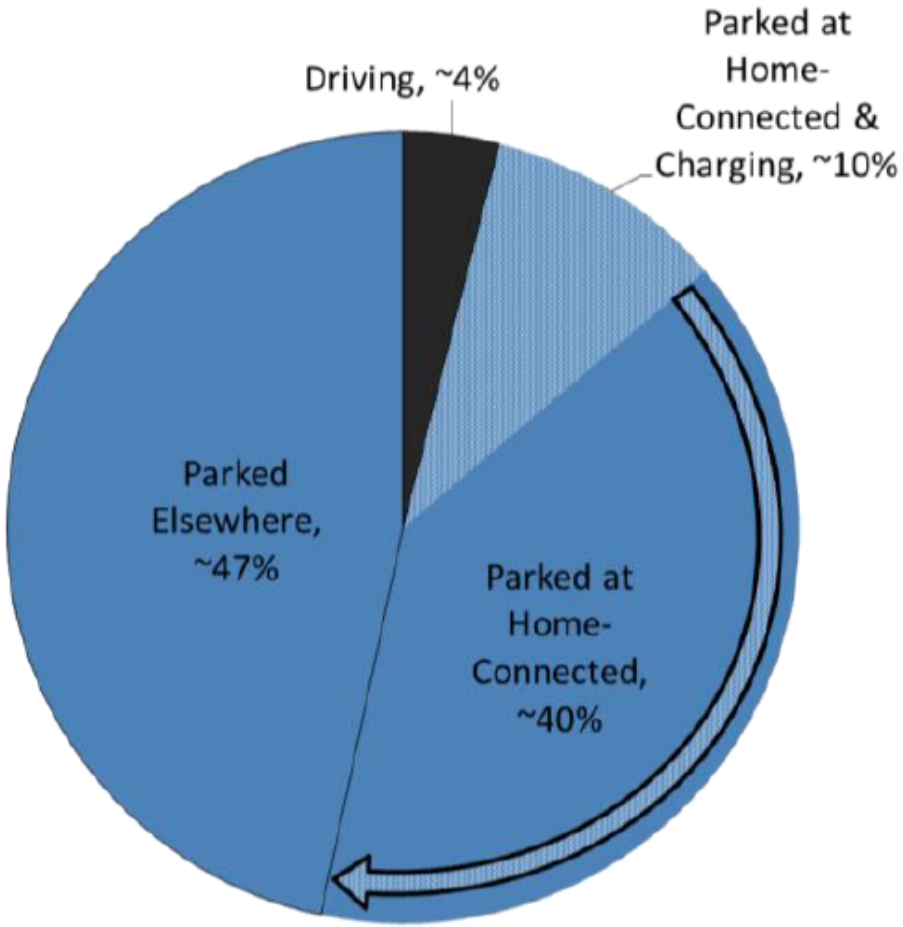
– 1.5M ZEVs in California by 2025

"Vehicle electrification and smart grid technology implementation present an opportunity for EVs, through charging strategies and aggregation, to support and provide valuable services to contribute to reliable management of the electricity grid"

DOE Congressional Budget Request

"The lack of understanding of the impact that the large-scale market penetration of PEVs may have on the electric grid (such as charging during on-peak hours, coordination of charging events, and time-of-day pricing) represents a challenge that must be overcome in order to achieve market success. "

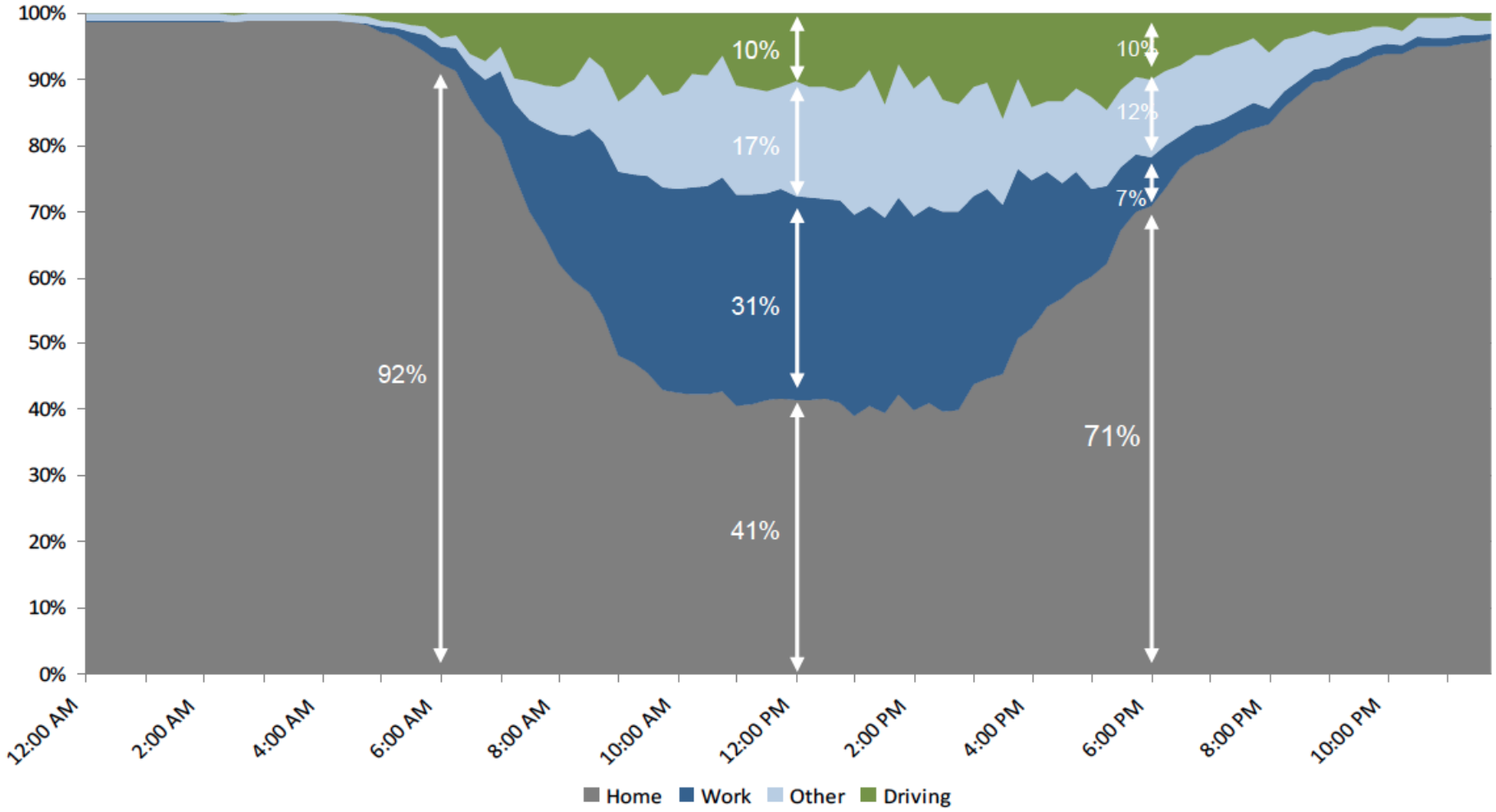
PEV Energy Storage: How much, when, and where?



Estimated percent of time PEVs spend by location and activity.

A. Langton and N. Crisostomo, “Vehicle-grid integration: A vision for zero-emission transportation interconnected throughout Californias electricity system,” California Public Utilities Commission, Tech. Rep. R. 13-11-XXX, 2013.

PEV Energy Storage: How much, when, and where?



A. Langton and N. Crisostomo, “Vehicle-grid integration: A vision for zero-emission transportation interconnected throughout Californias electricity system,” California Public Utilities Commission, Tech. Rep. R. 13-11-XXX, 2013.

Cloud Enabled Smart Charging of PEVs

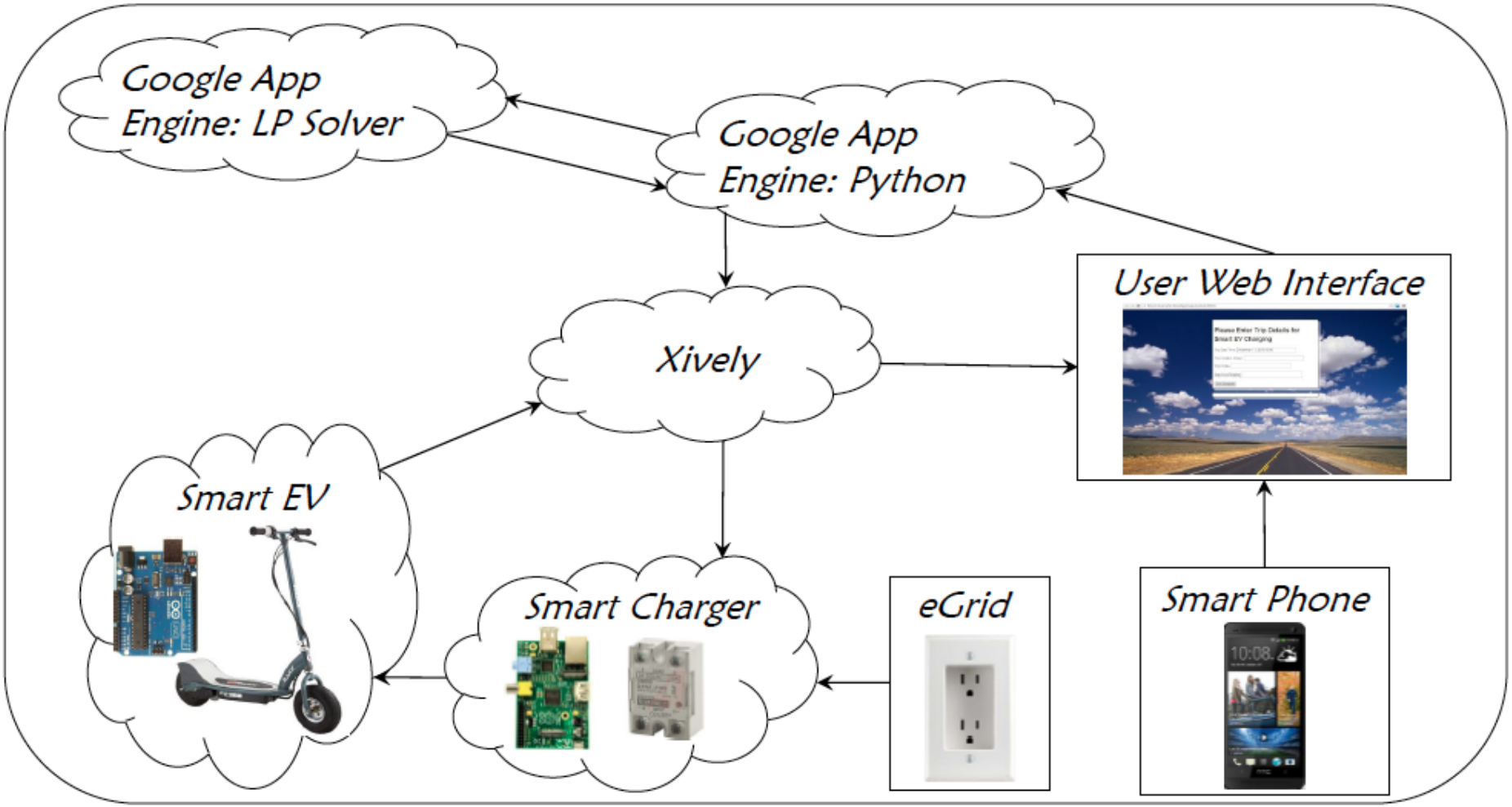


Figure 2. On the Cloud Optimization System for Smart EV Charging

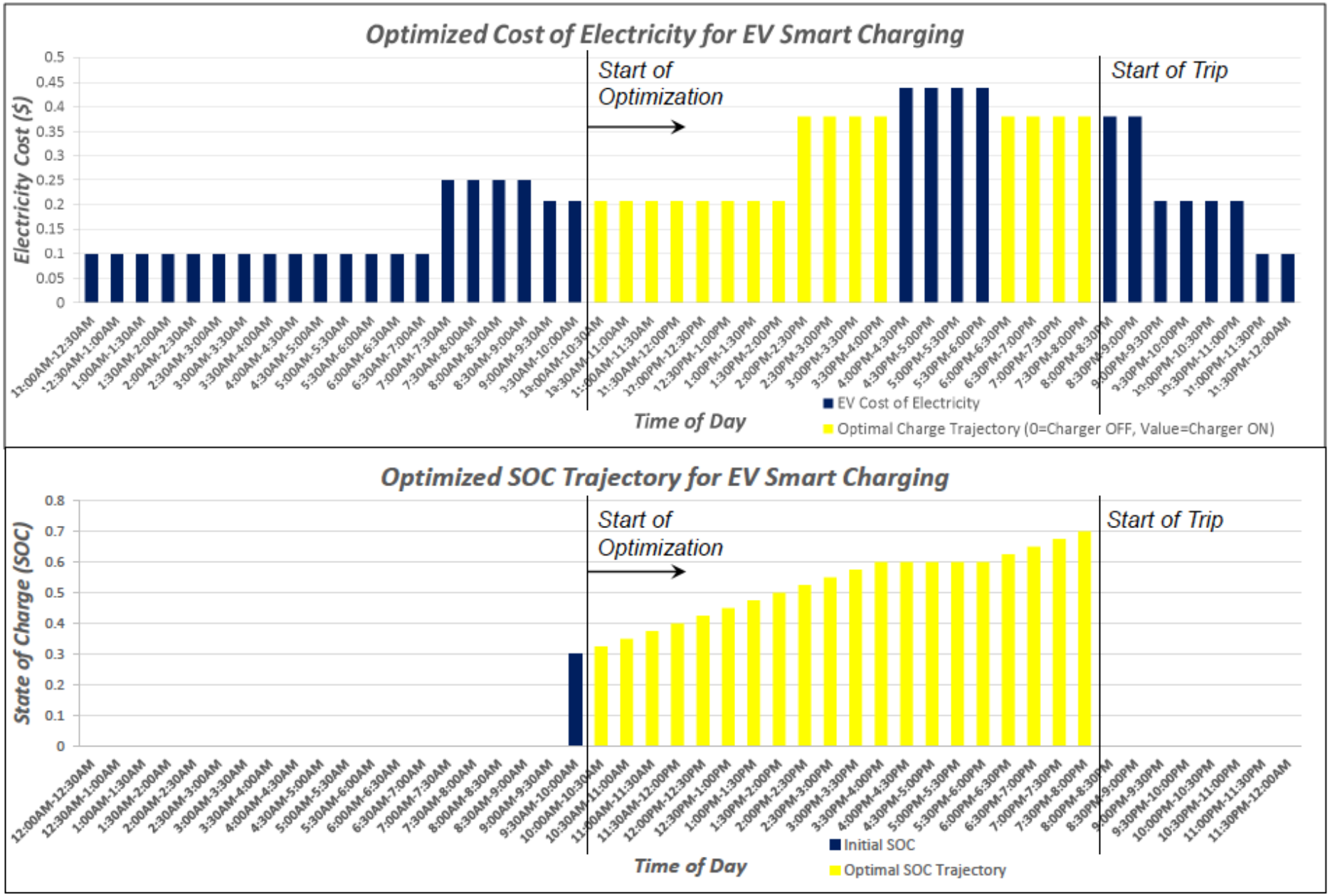
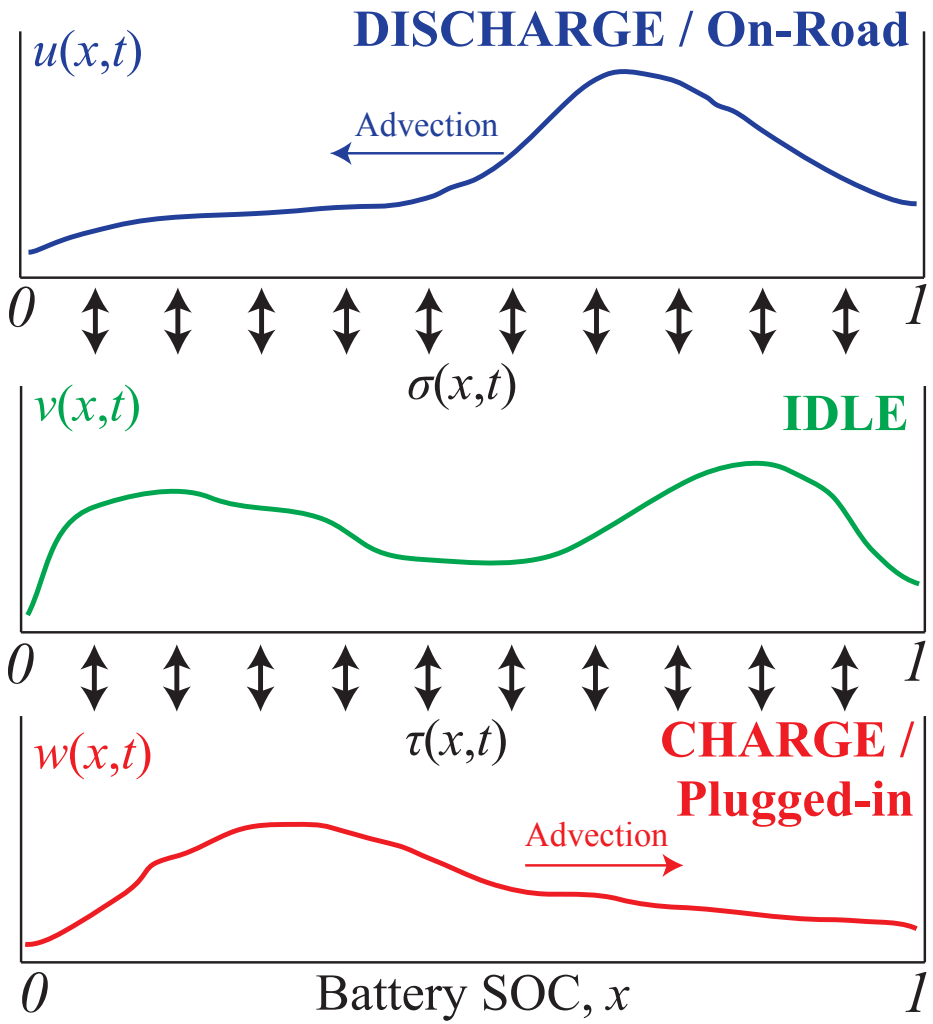


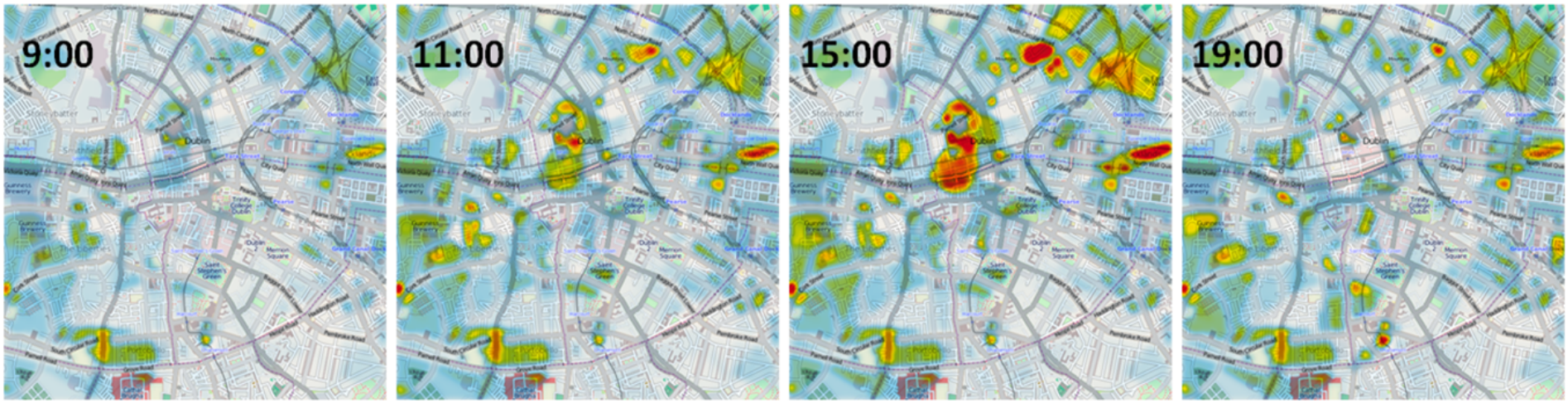
Figure 3. Optimal Charge Cost and SOC Trajectory

Modeling Aggregated PEVs w/ PDEs



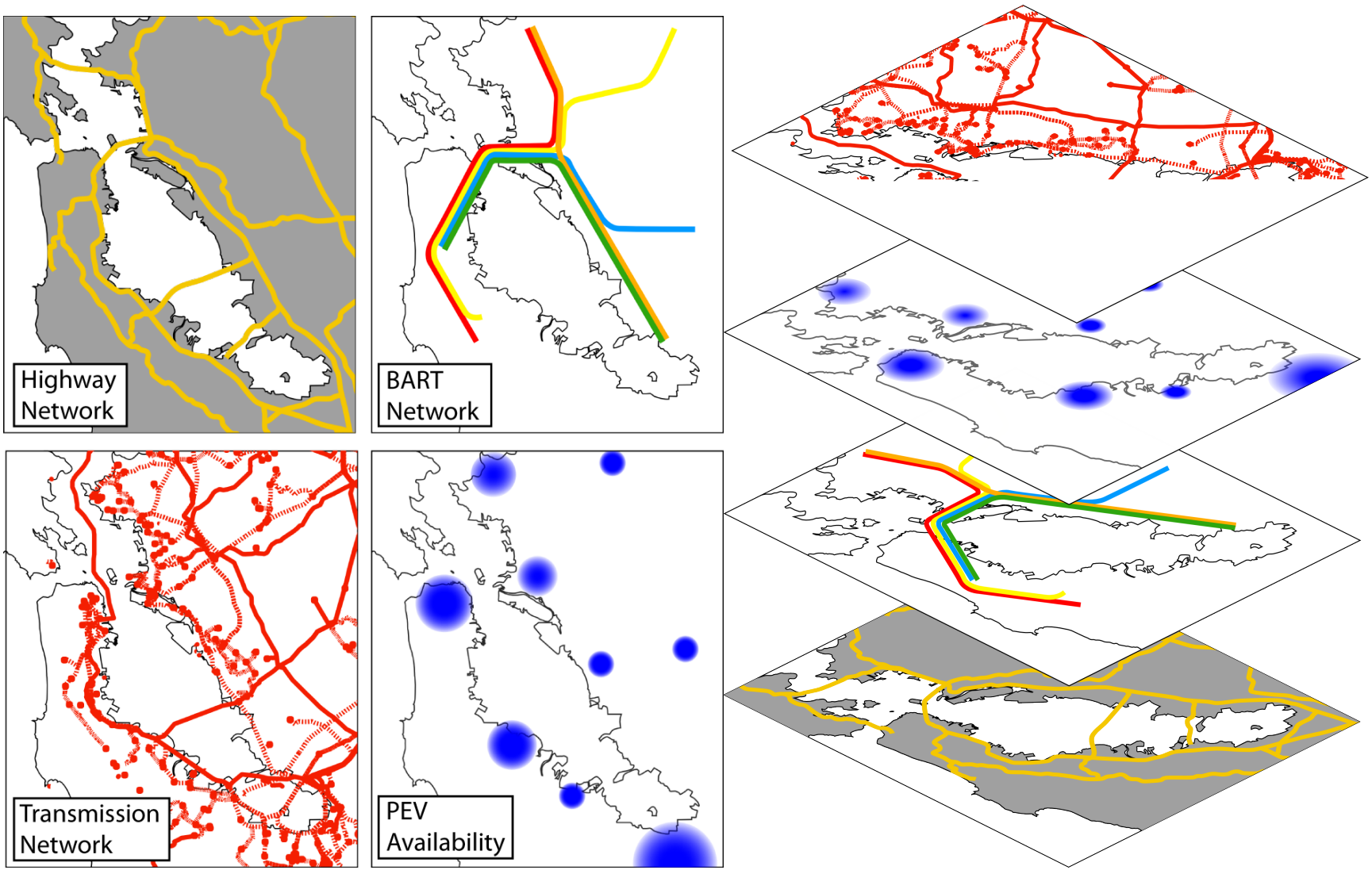
$u(x,t)$	# PEVs / SOC, in DISCHARGE state, @ SOC x, time t
$v(x,t)$	# PEVs / SOC, in IDLE state, @ SOC x, time t
$w(x,t)$	# PEVs / SOC, in CHARGE state, @ SOC x, time t

Spatio-Temporal Evolution



Population densities estimated from cell phone usage at different time of the day: morning (left), shopping time (both images in the centre), evening (right) (Source: Kaiser and Pozdnoukhov 2013)

Coupled Transportation-Energy Networks



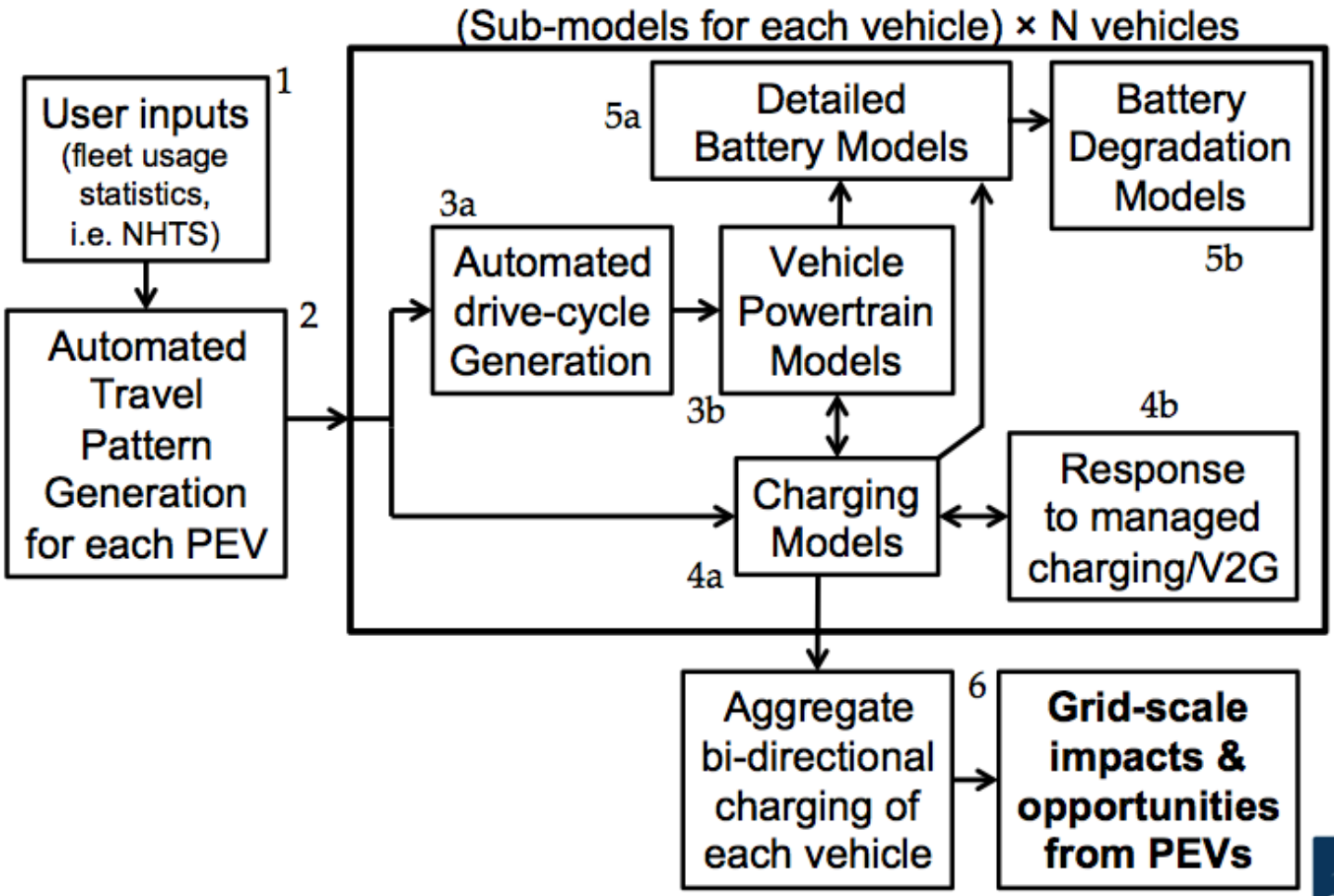
V2G-Sim (Lawrence Berkeley National Lab)

A simulation platform for model-based design and analysis of vehicle-grid integration



V2G-Sim (Lawrence Berkeley National Lab)

A simulation platform for model-based design and analysis of vehicle-grid integration



Environmental Energy Technologies: Vehicle Powertrain Technologies
powertrains.lbl.gov

BERKELEY LAB

V2G-Sim (Lawrence Berkeley National Lab)

A simulation platform for model-based design and analysis of vehicle-grid integration

Growing User-base & Developers:

- CEC
- CAISO
- DOE EERE / VTO/ Office of Electricity
- First Look West (FLoW) Cleantech Incubator
- Gov’t leaders in China & India
- Domestic/International Universities
- Automotive OEMs
- Nissan (validation data)
- Chargepoint (validation data)

Project-based Course on V2G System

- Fleet of eScooters
- Collect shared mobility data, design VGI system
- Learn hardware, software, algorithms, big data, cloud-based computing
- Berkeley Energy and Climate Lectures Curriculum Innovation Award







CE 186

DESIGN OF CYBER-PHYSICAL SYSTEMS

Spring 2014: Mon & Wed 2-4



Topics Include:

- Energy Management and Power Systems
- Vehicle-to-Grid and Battery Models
- Internet-based Systems
- Data Collection and Analysis

Control & Optimization w/ Application to Energy Systems

Sample Course Projects:

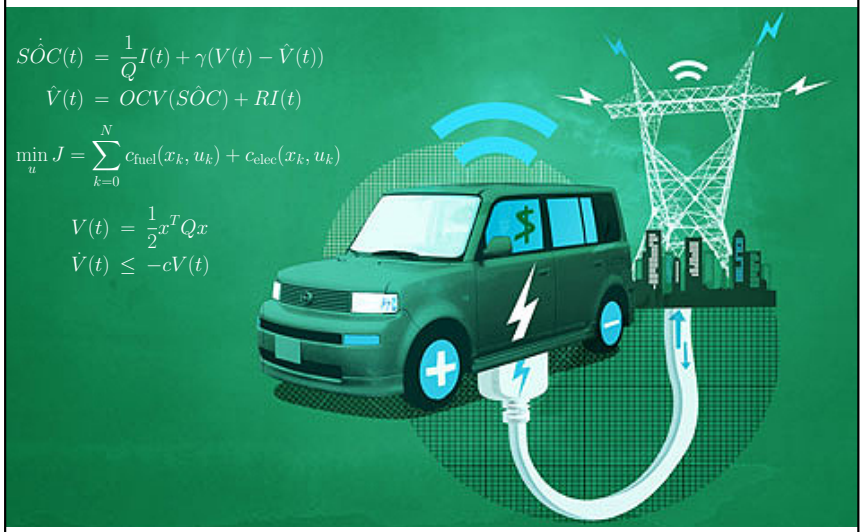
- Aggregate Modeling & Control of PEV Fleets for V2G Services
- Optimal Design & Charging of Shared eBike Fleets
- Cloud-Enabled MPC of Home Heating System
- Storage Optimization for Wind Energy
- Smart Home Energy Management w/ Photovoltaics
- Battery Charge Estimation
- Building Lighting Controls
- Rooftop & Centralized Solar Generation in Nicaragua

CE 290:002

Energy Systems & Control

Spring 2014: MWF 10-11

Prof. Scott Moura



Topics Include:

- Energy Storage & Renewables
- Electrified Transportation
- State estimation
- Optimal control

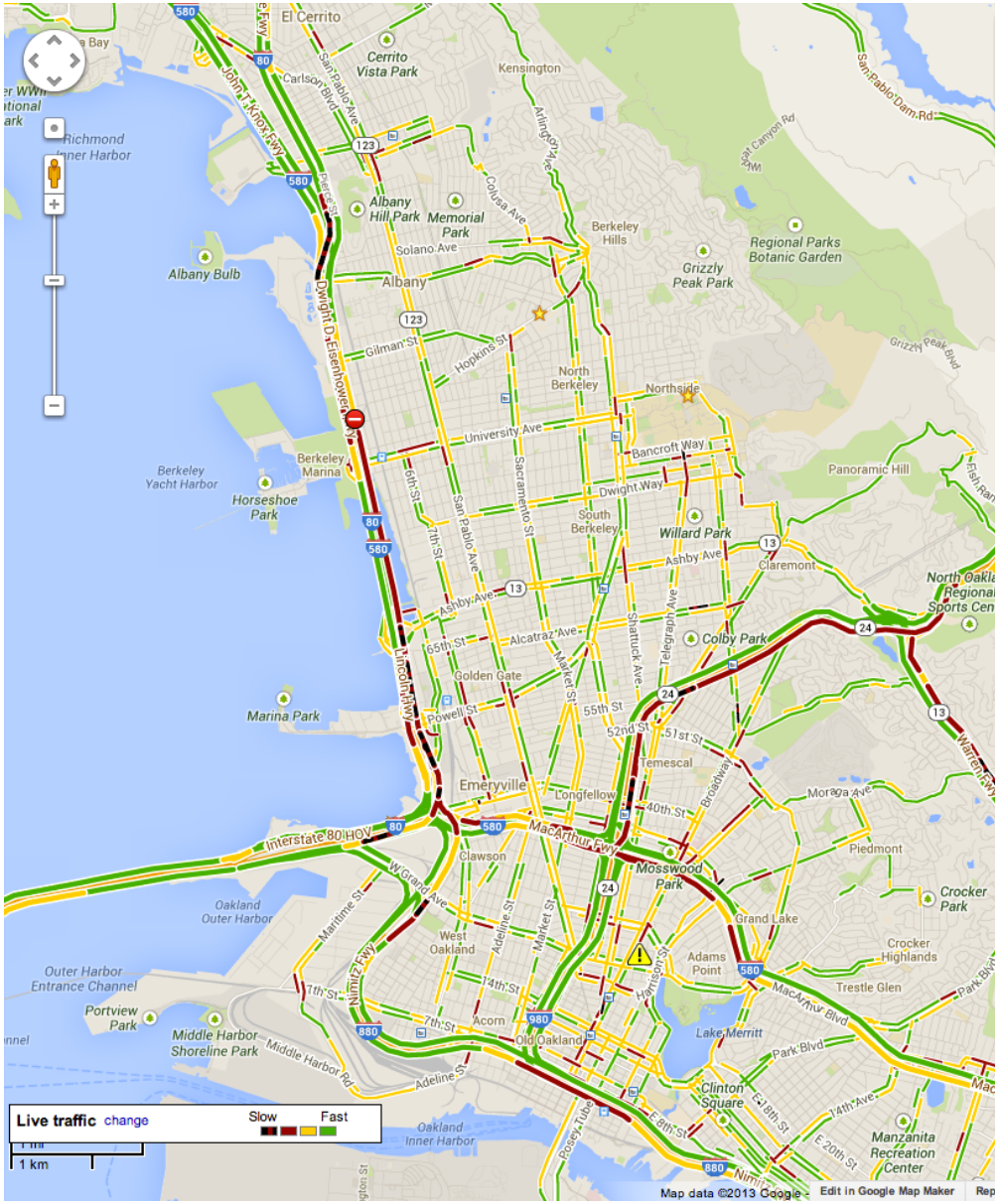
Questions?

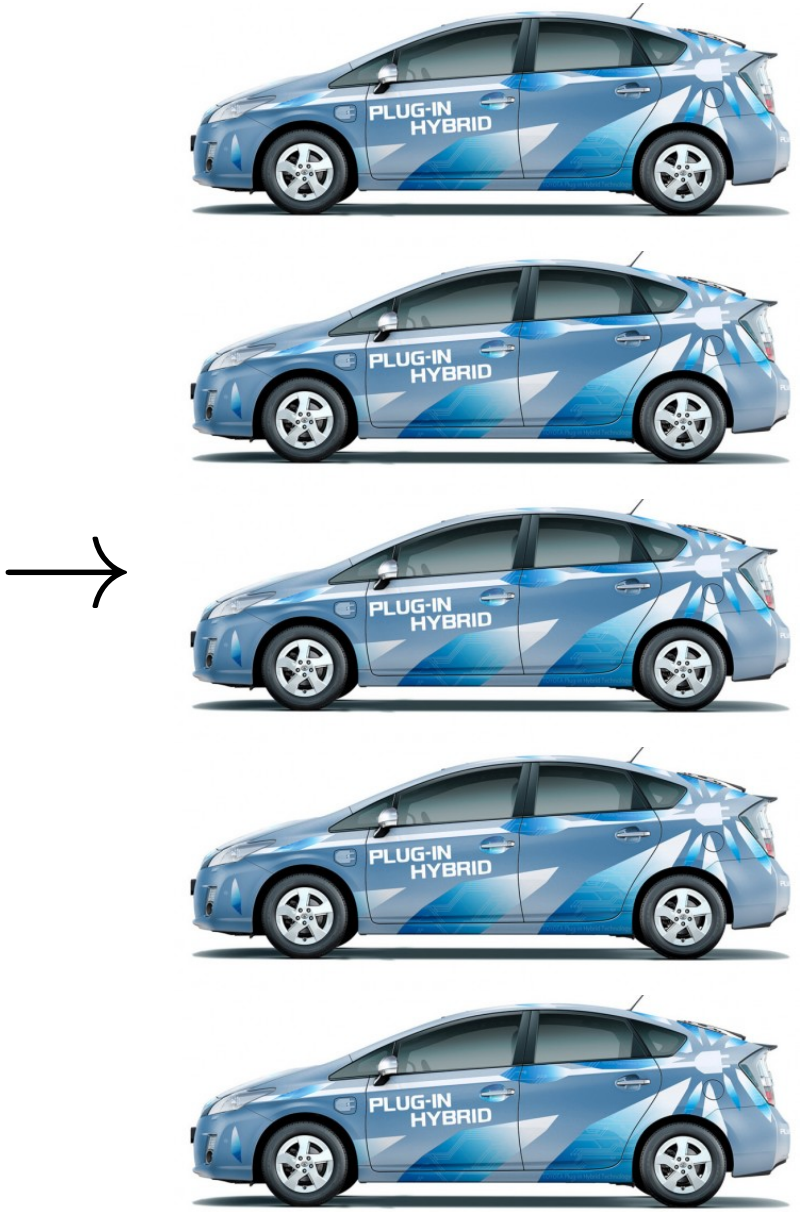
Energy, Controls, and Applications Lab (eCAL)

ecal.berkeley.edu

smoura@berkeley.edu

Optimize PHEV Energy Management w/ Real-time Traffic Data





Why Care?

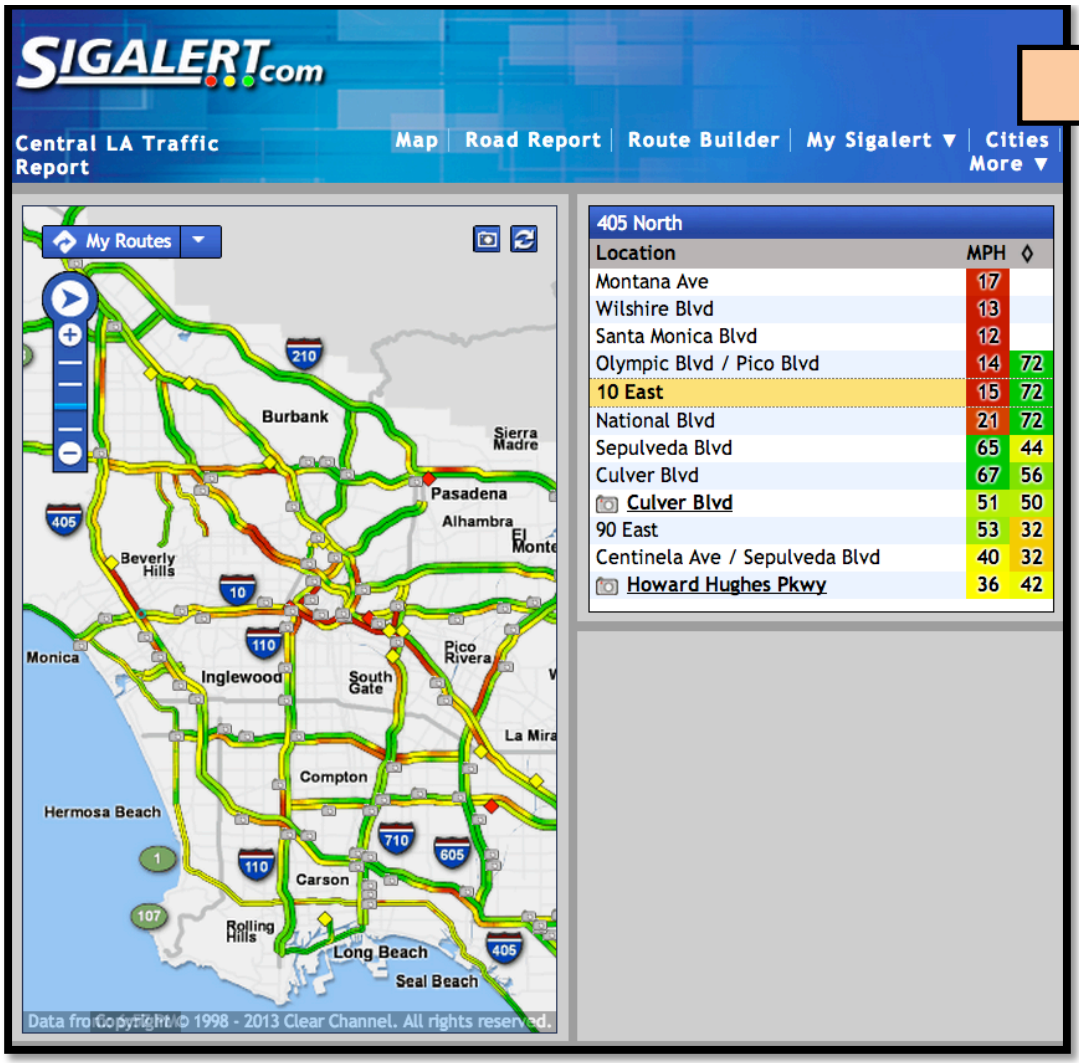
The Problem

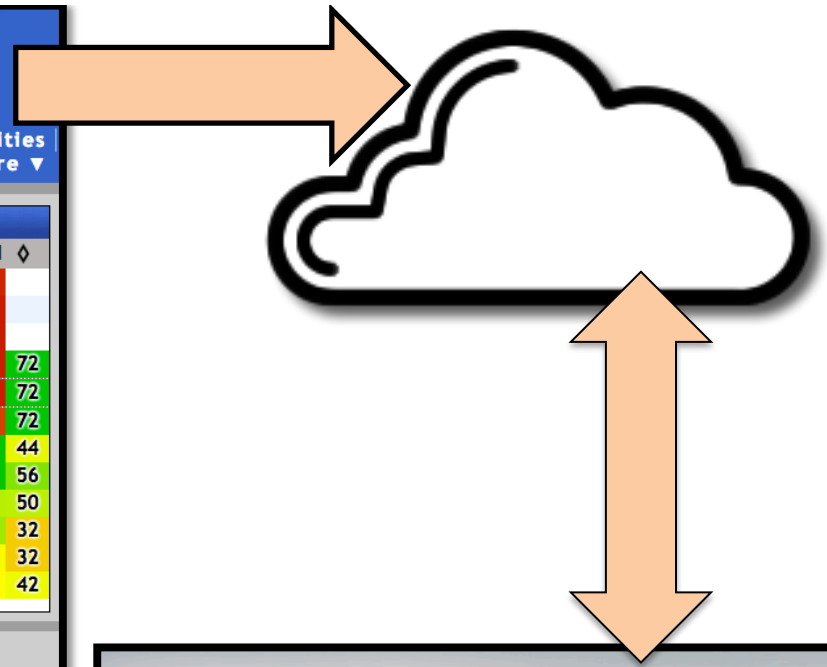
- 54.5 MPG CAFE by 2025
- Increased CAFE $\rightarrow$ Increased powertrain tech costs
- Urbanization $\rightarrow$ traffic $\rightarrow$ lower MPG

An Interesting Solution

- Real-time traffic data (Google Traffic, PEMS, SigAlert.com) is available
- Cloud computing enables data retrival, optimization, communication
- Adapt PHEV energy management to real-time traffic conditions

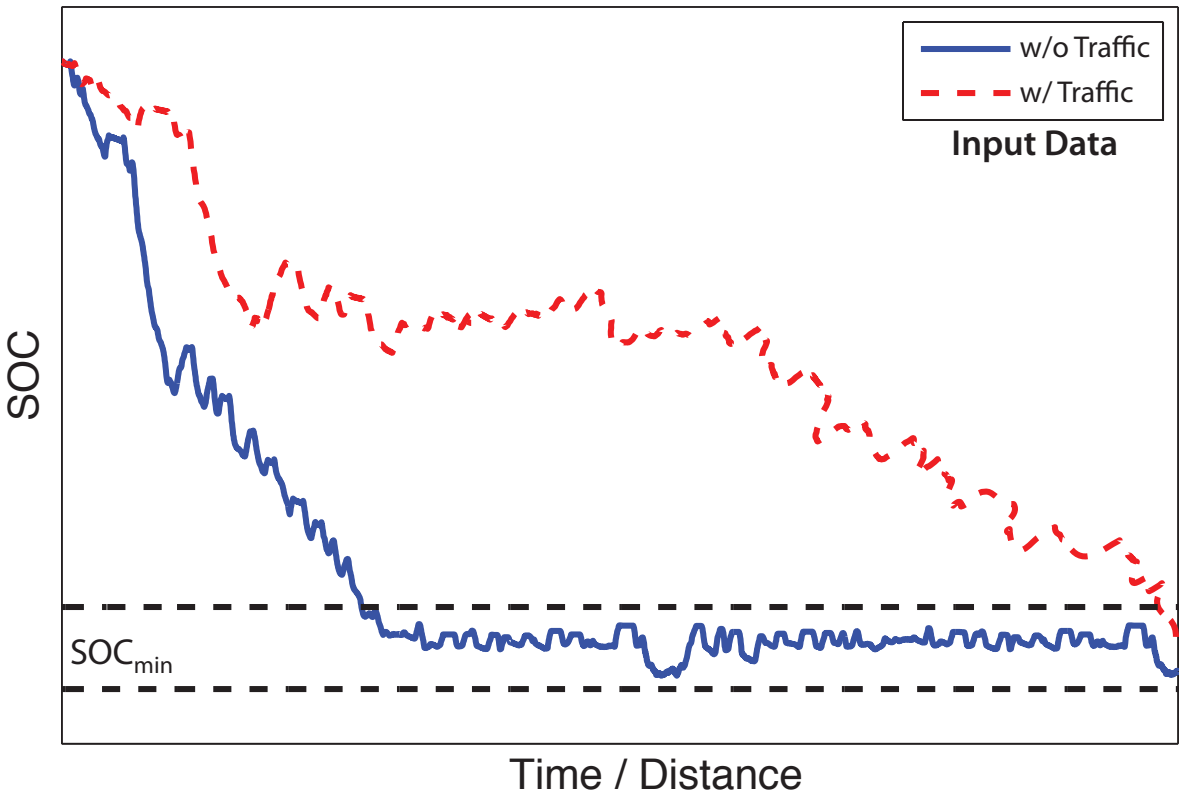
Optimize PHEV Energy Management w/ Real-time Traffic Data

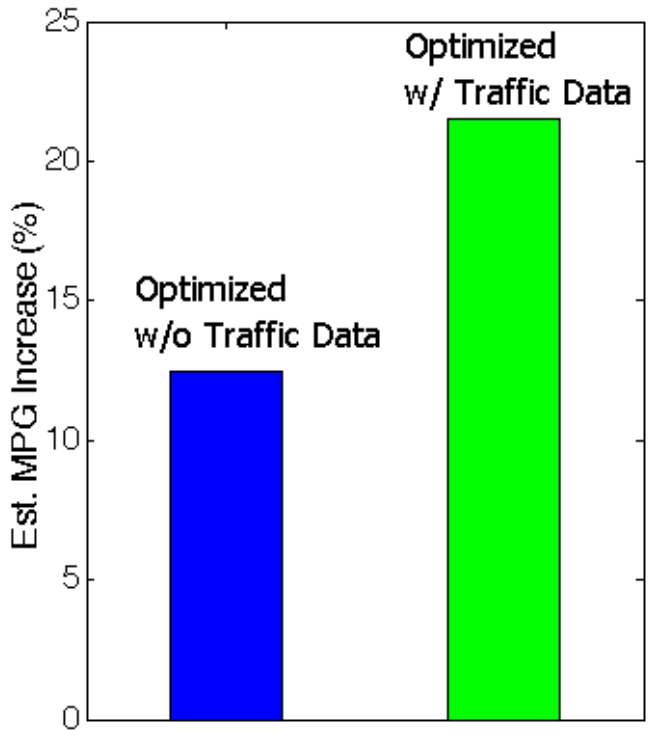






Traffic Data





- Maximize MPG by blending engine & battery such that min battery charge (SOC) is reached exactly at end of trip
- All trips are different
- Real-time traffic data provides speeds, elevation, accidents, etc.