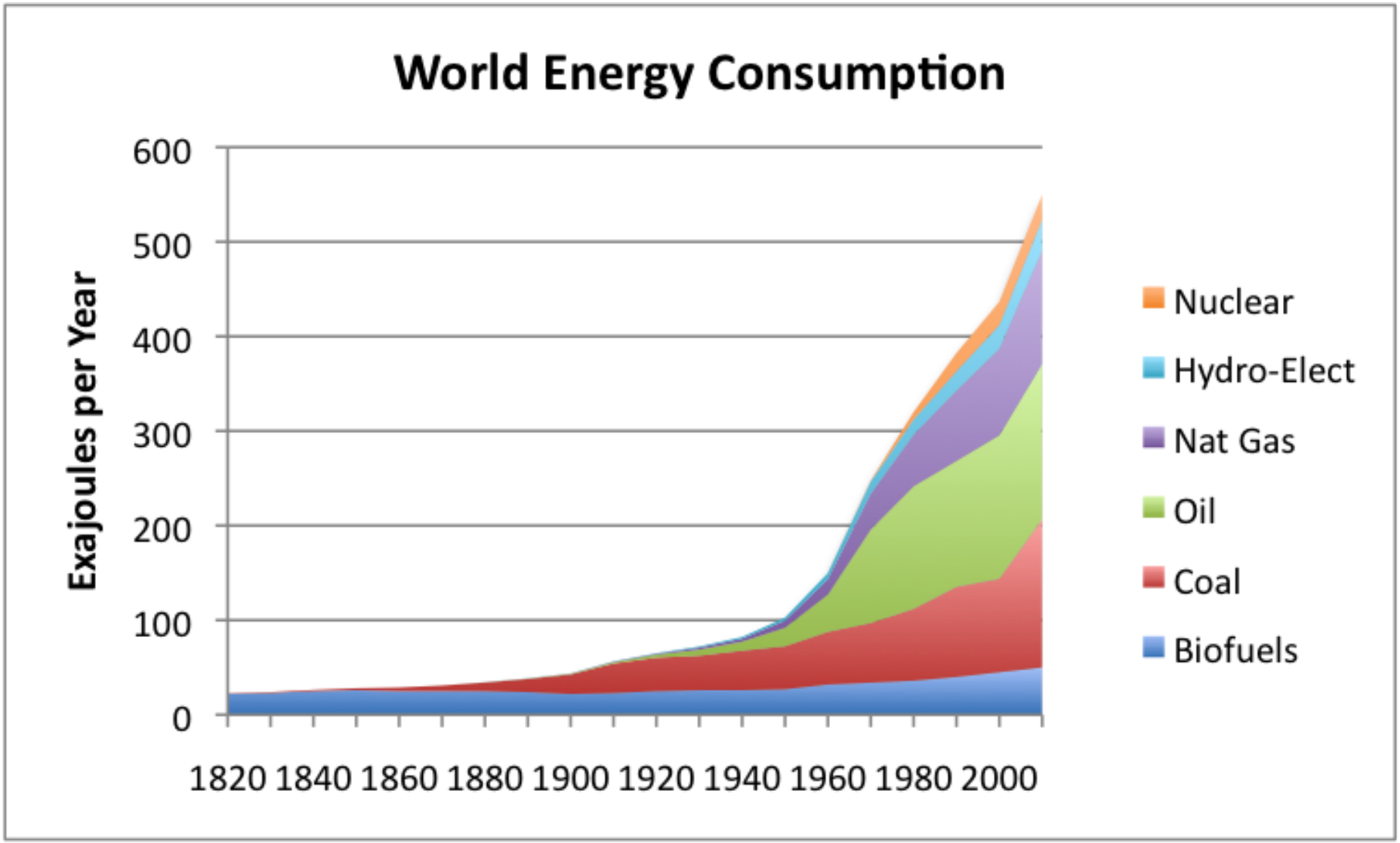
Modeling, Estimation, and Control in Energy Systems: Batteries & Demand Response

Scott Moura

Assistant Professor
Civl & Environmental Engineering
University of California, Berkeley

EETD | LBNL





Source: Vaclav Smil Estimates from Energy Transitions

Energy Initiatives



Denmark 50% wind penetration by 2025

Brazil uses 86% renewables

China's aggressive energy/carbon intensity reduction



EV Everywhere

SunShot

Green Button



Zero emissions vehicle (ZEV)

33% renewables by 2020

Go Solar California

Energy Systems of Interest

Energy storage	Smart Grids
(e.g., batteries)	(e.g., demand response)

Energy Systems of Interest

Energy storage	Smart Grids
(e.g., batteries)	(e.g., demand response)

Outline

1. Electrochemistry-based Battery Controls
2. Demand Response of TCLs
3. Coming Soon...

Outline

1. Electrochemistry-based Battery Controls
2. Demand Response of TCLs
3. Coming Soon...

The Battery Problem

Needs: Cheap, high energy/power, fast charge, long life

The Battery Problem

Needs: Cheap, high energy/power, fast charge, long life

Reality: Expensive, conservatively design/operated, die too quickly

The Battery Problem

Needs: Cheap, high energy/power, fast charge, long life

Reality: Expensive, conservatively design/operated, die too quickly

Some Motivating Facts

EV Batts	1000 USD / kWh (2010)*
	485 USD / kWh (2012)*
	125 USD / kWh for parity to IC engine
	Only 50-80% of available capacity is used
	Range anxiety inhibits adoption
	Lifetime risks caused by fast charging

*Source: MIT Technology Review, "The Electric Car is Here to Stay." (2013)

The Battery Problem

Needs: Cheap, high energy/power, fast charge, long life

Reality: Expensive, conservatively design/operated, die too quickly

Some Motivating Facts

EV Batts	1000 USD / kWh (2010)*
	485 USD / kWh (2012)*
	125 USD / kWh for parity to IC engine
	Only 50-80% of available capacity is used
	Range anxiety inhibits adoption
	Lifetime risks caused by fast charging

Two Solutions

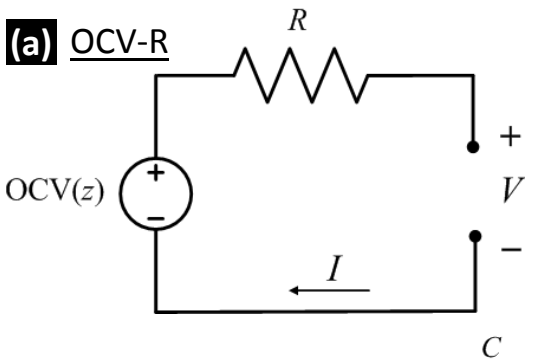
Design better batteries (materials science & chemistry)	Make current batteries better (estimation and control)

*Source: MIT Technology Review, "The Electric Car is Here to Stay." (2013)

Battery Models

Equivalent Circuit Model

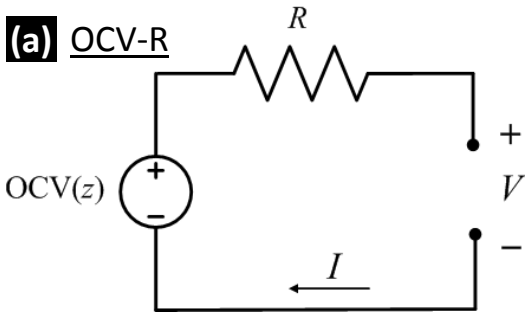
(a) OCV-R



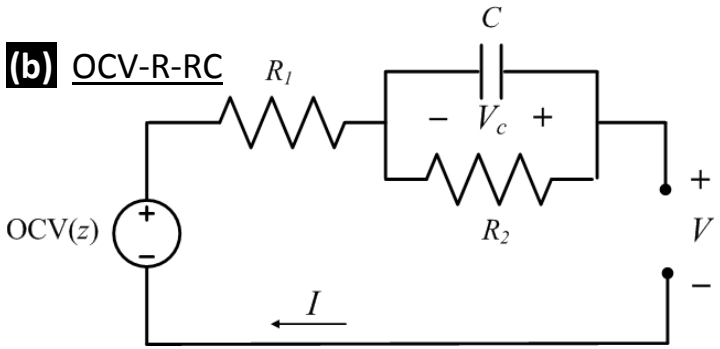
Battery Models

Equivalent Circuit Model

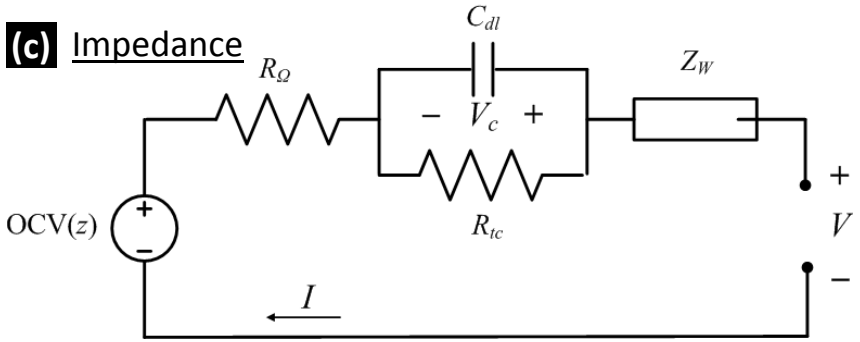
(a) OCV-R



(b) OCV-R-RC

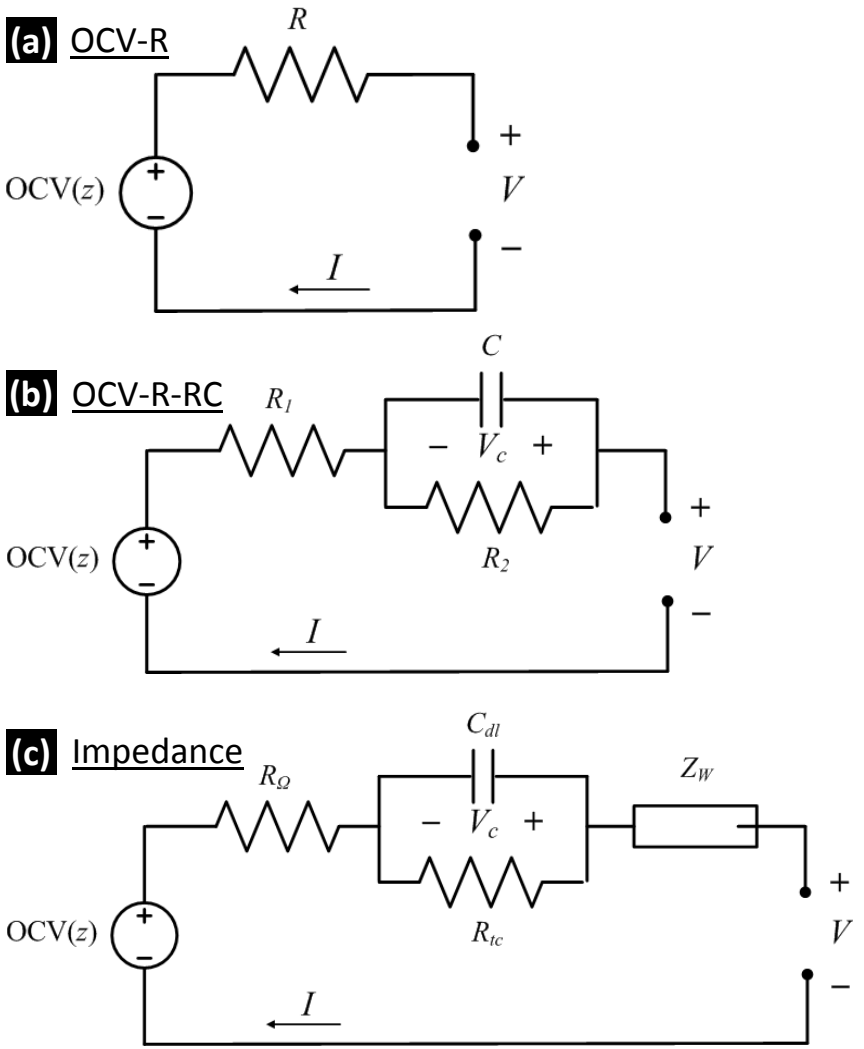


(c) Impedance

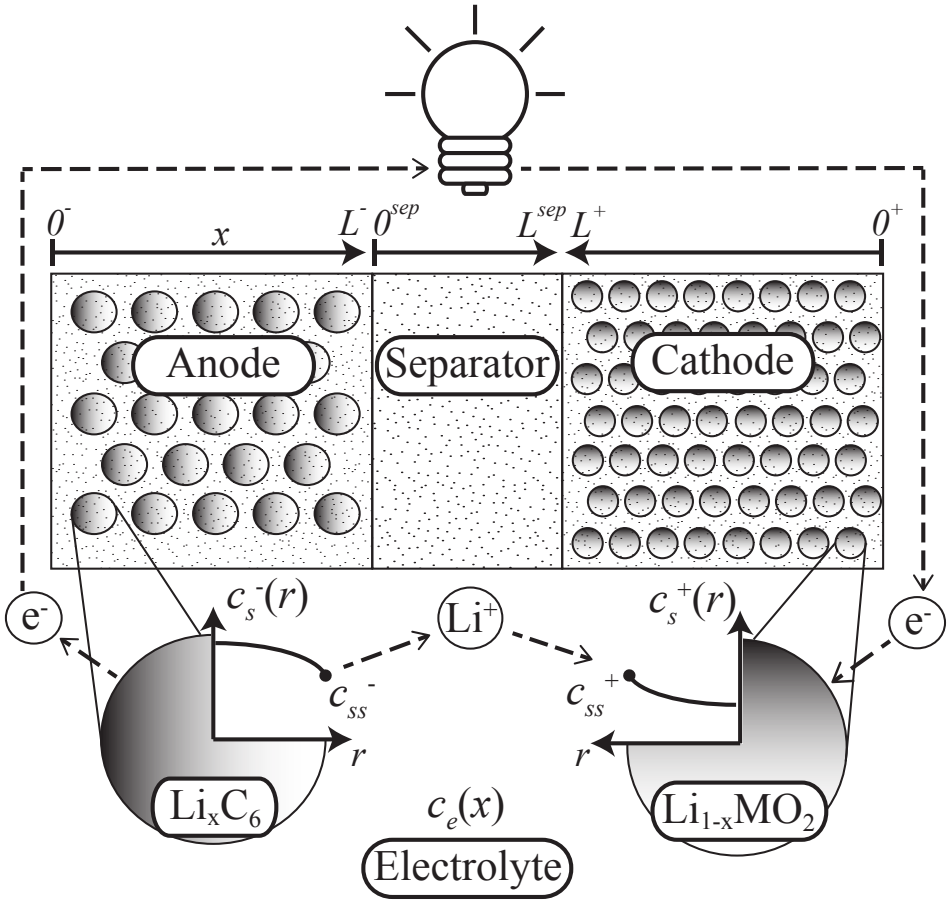


Battery Models

Equivalent Circuit Model

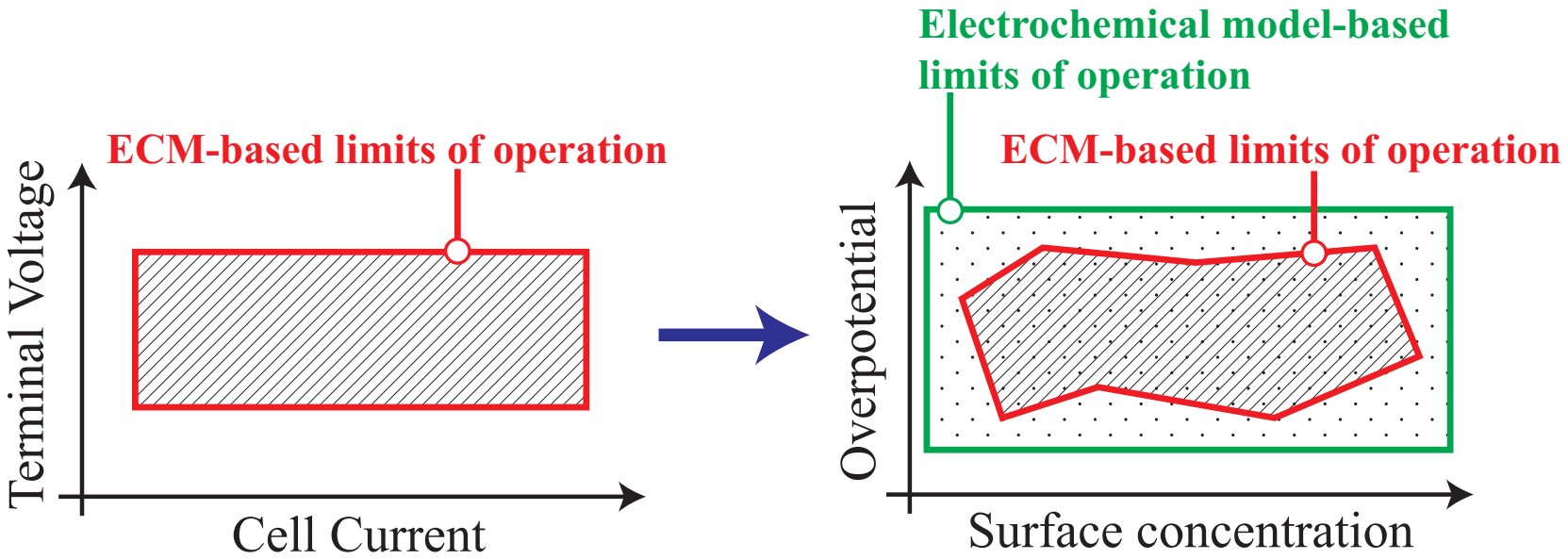


Electrochemical Model





Operate Batteries at their Physical Limits



Electrochemical Model Equations

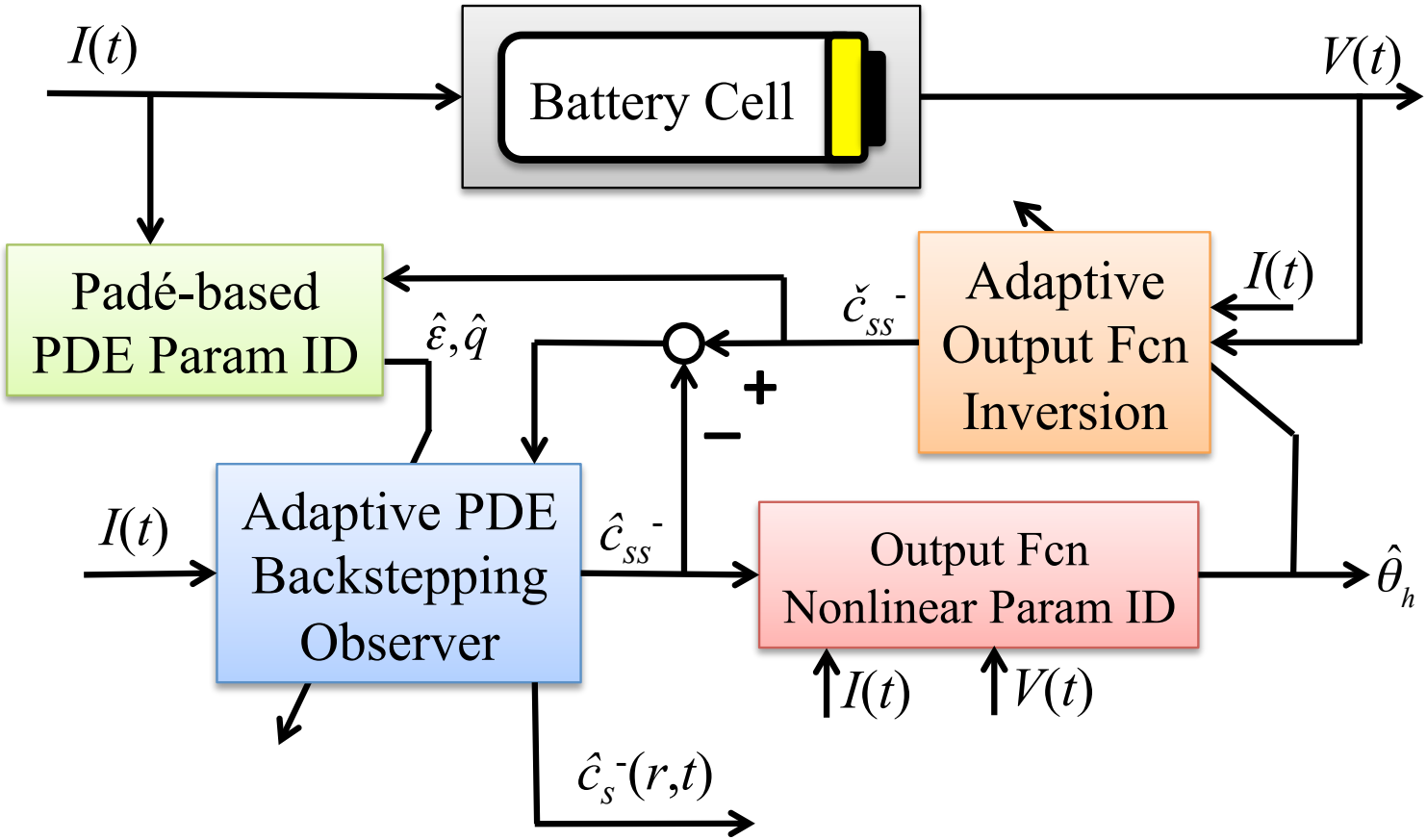
well, some of them

Description	**Equation**
Solid phase Li concentration	$\frac{\partial c_s^{\pm}}{\partial t}(x,r,t) = \frac{1}{r^2}\frac{\partial}{\partial r}\left[D_s^{\pm} r^2 \frac{\partial c_s^{\pm}}{\partial r}(x,r,t)\right]$
Electrolyte Li concentration	$\varepsilon_e \frac{\partial c_e}{\partial t}(x,t) = \frac{\partial}{\partial x}\left[\varepsilon_e D_e \frac{\partial c_e}{\partial x}(x,t) + \frac{1-t_c^0}{F} i_e^{\pm}(x,t)\right]$
Solid potential	$\frac{\partial \phi_s^{\pm}}{\partial x}(x,t) = \frac{i_e^{\pm}(x,t) - I(t)}{\sigma^{\pm}}$
Electrolyte potential	$\frac{\partial \phi_e}{\partial x}(x,t) = -\frac{i_e^{\pm}(x,t)}{\kappa} + \frac{2RT}{F}(1-t_c^0)\left(1 + \frac{d\ln f_{c/a}}{d\ln c_e}(x,t)\right)\frac{\partial \ln c_e}{\partial x}(x,t)$
Electrolyte ionic current	$\frac{\partial i_e^{\pm}}{\partial x}(x,t) = a_s F j_n^{\pm}(x,t)$
Molar flux btw phases	$j_n^{\pm}(x,t) = \frac{1}{F} i_0^{\pm}(x,t)\left[e^{\frac{\alpha_a F}{RT}\eta^{\pm}(x,t)} - e^{-\frac{\alpha_c F}{RT}\eta^{\pm}(x,t)}\right]$
Temperature	$\rho c_P \frac{dT}{dt}(t) = h\left[T^0(t) - T(t)\right] + I(t)V(t) - \int_{0^-}^{0^+} a_s F j_n(x,t)\Delta T(x,t)dx$

Animation of Li Ion Evolution

Adaptive Observer

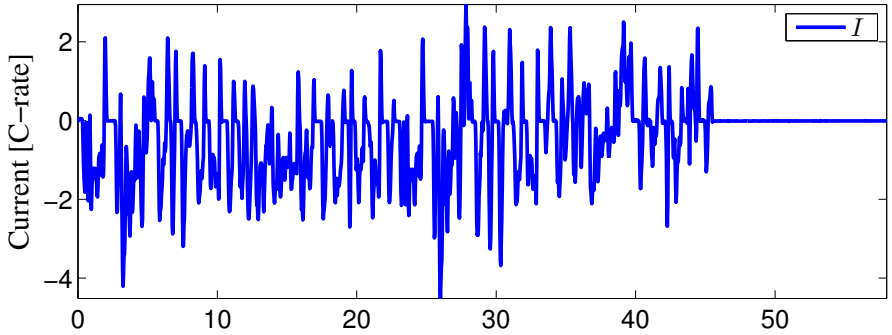
Combined State & Parameter Estimation



S. J. Moura, N. A. Chaturvedi, M. Krstic, "Adaptive PDE Observer for Battery SOC/SOH Estimation via an Electrochemical Model," *ASME Journal of Dynamic Systems, Measurement, and Control*, 2013.

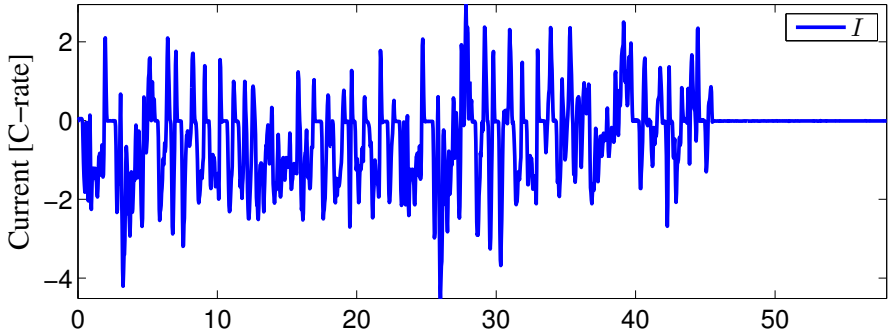
Results

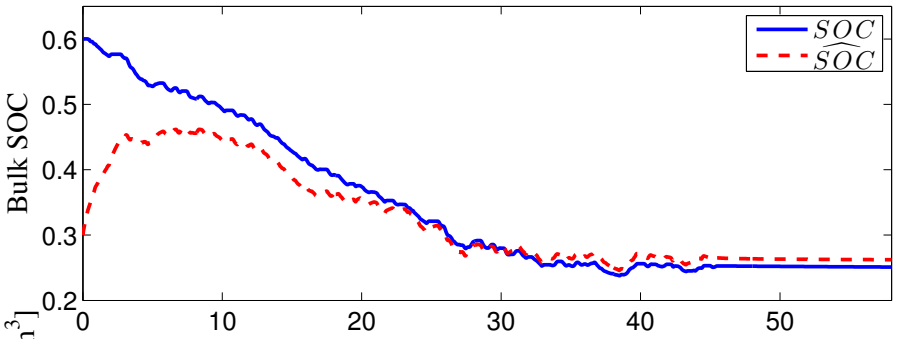
UDDS Drive Cycle Input

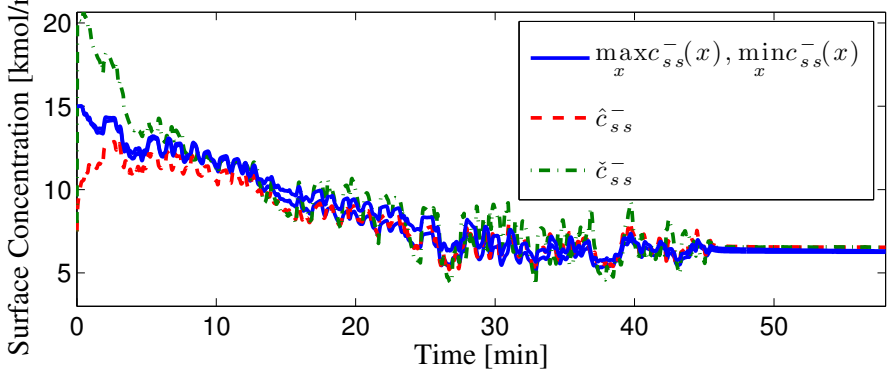


Results

UDDS Drive Cycle Input

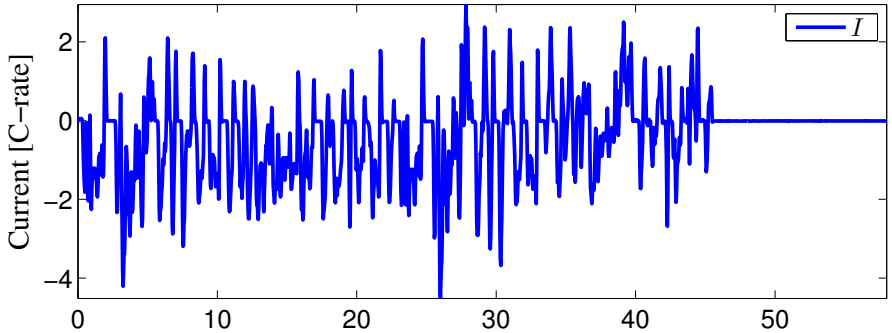


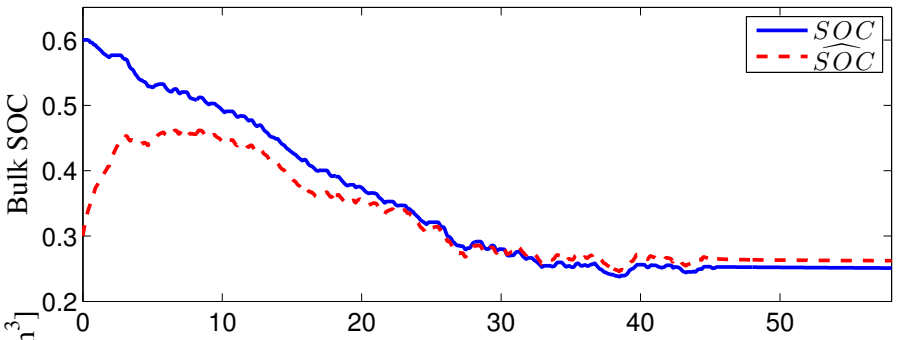


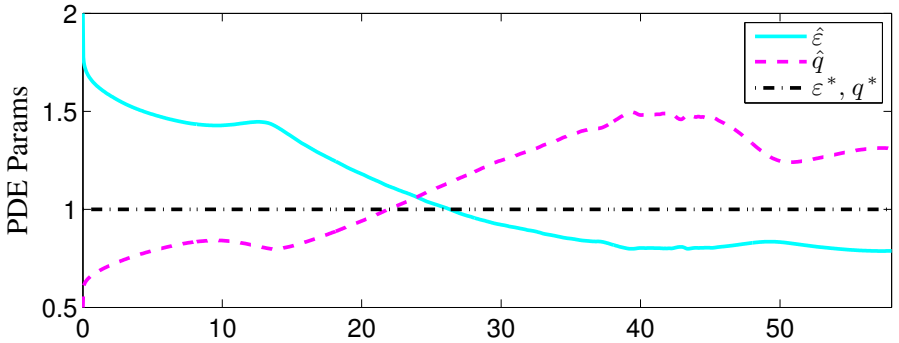


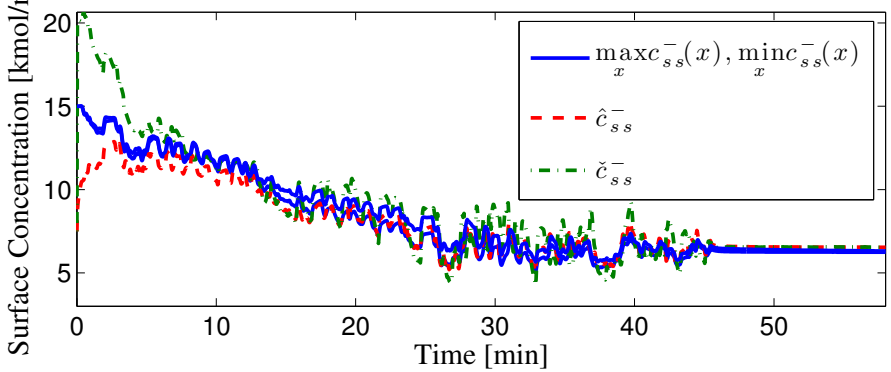
Results

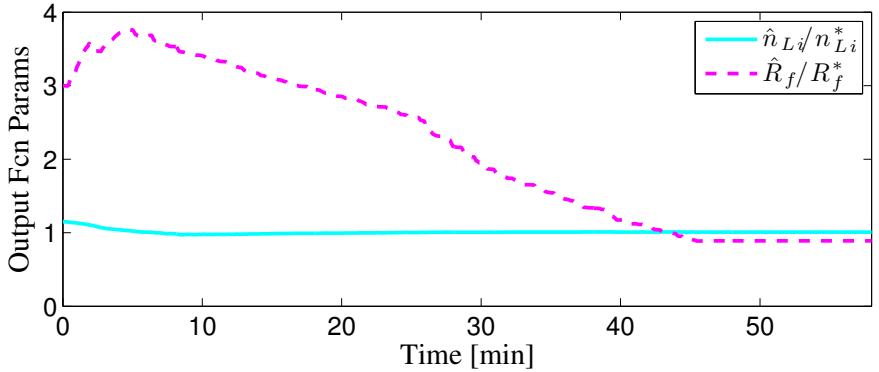
UDDS Drive Cycle Input







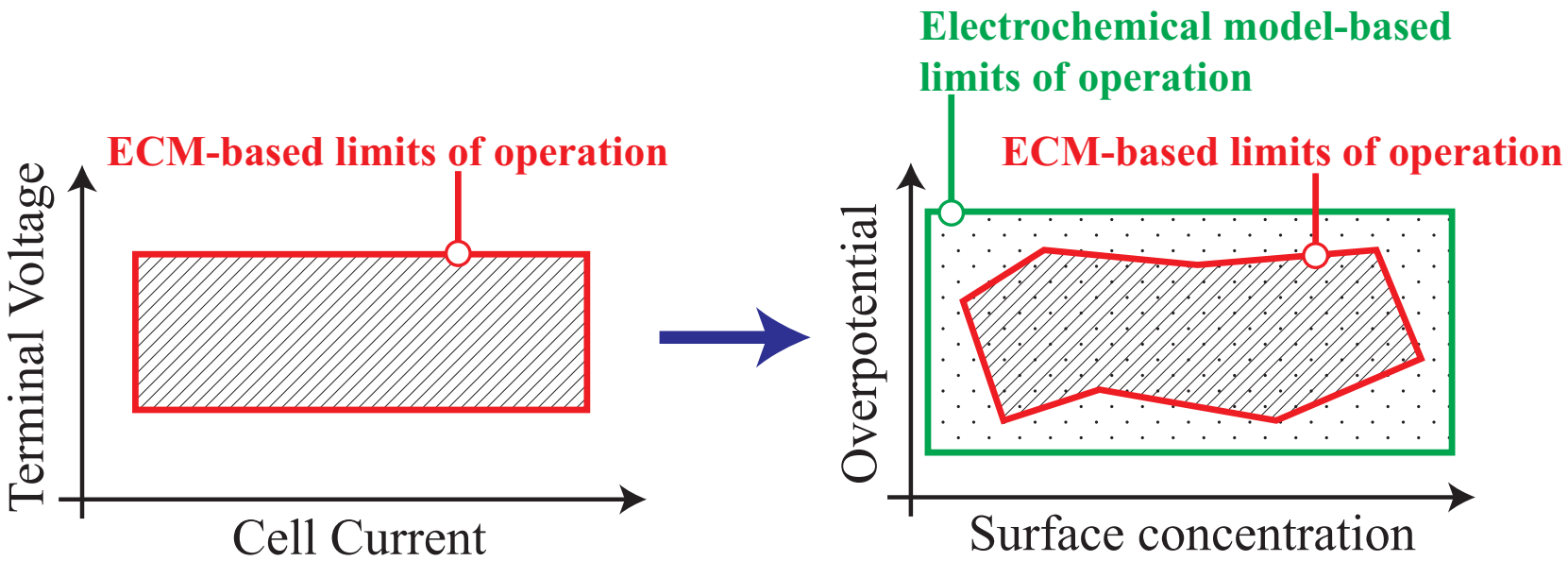




Operate Batteries at their Physical Limits

Problem Statement

Given accurate state estimates, govern the electric current such that safe operating constraints are satisfied.

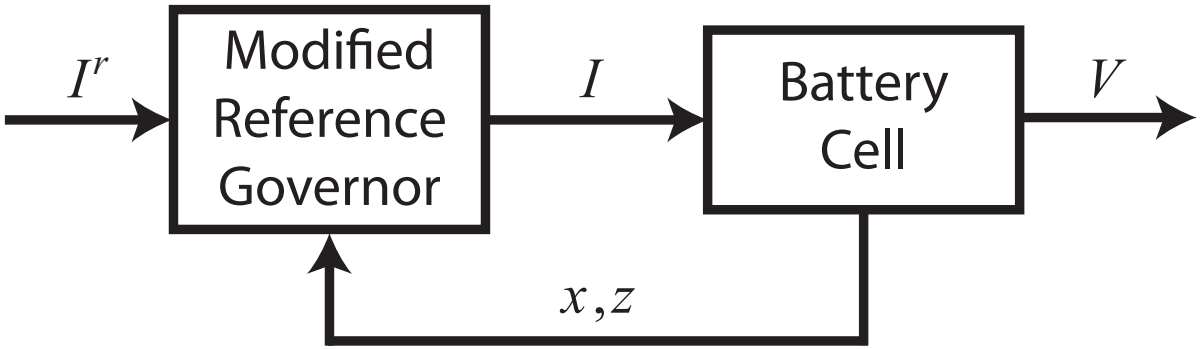


Constraints

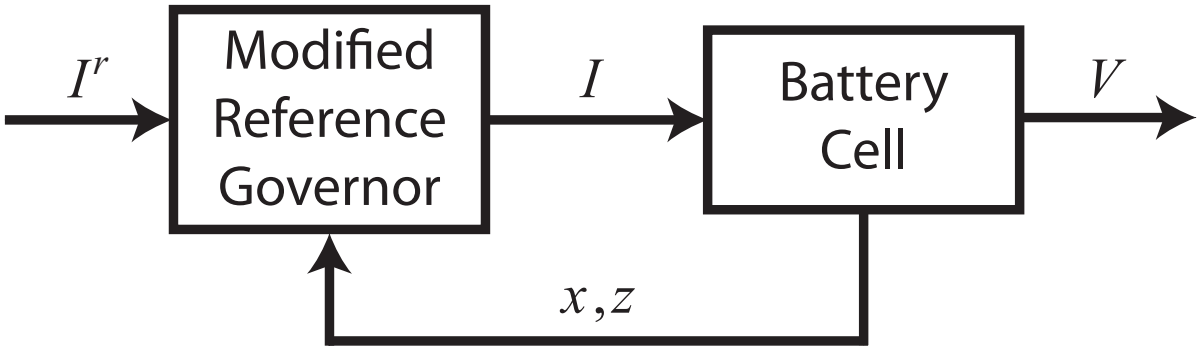
Variable	Definition	Constraint
$I(t)$	Current	Power electronics limits
$c_s^{\pm}(x,r,t)$	Li concentration in solid	Saturation/depletion
$\frac{\partial c_s^{\pm}}{\partial r}(x,r,t)$	Li concentration gradient	Diffusion-induced stress
$c_e(x,t)$	Li concentration in electrolyte	Saturation/depletion
$T(t)$	Temperature	High/low temps accel. aging
$\eta_s(x,t)$	Side-rxn overpotential	Li plating, dendrite formation

Each variable, y, must satisfy $y_{\min} \leq y \leq y_{\max}$.

The Algorithm: Modified Reference Governor (MRG)



The Algorithm: Modified Reference Governor (MRG)

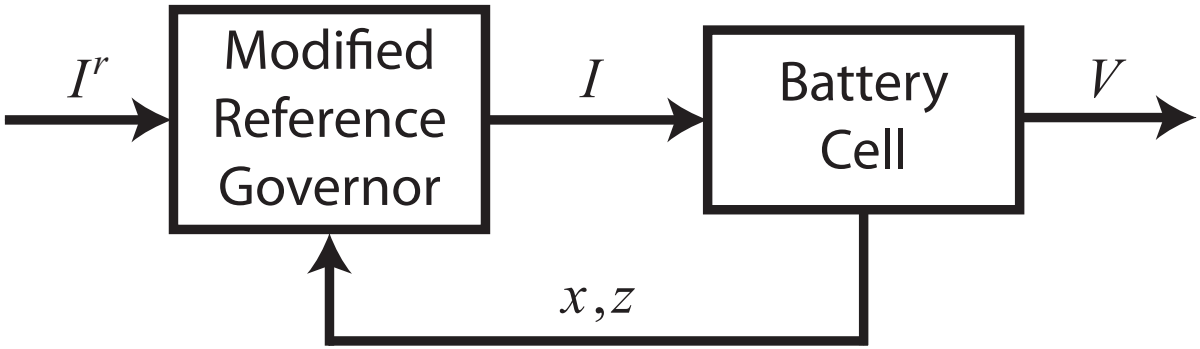


MRG Equations

$$I[k+1] = \beta^*[k] I^r[k], \qquad \beta^* \in [0,1],$$

$$\beta^*[k] = \max\{\beta \in [0,1] : (x(t), z(t)) \in \mathcal{O}\}$$

The Algorithm: Modified Reference Governor (MRG)



MRG Equations

$$I[k+1] = \beta^*[k] I^r[k], \qquad \beta^* \in [0,1],$$

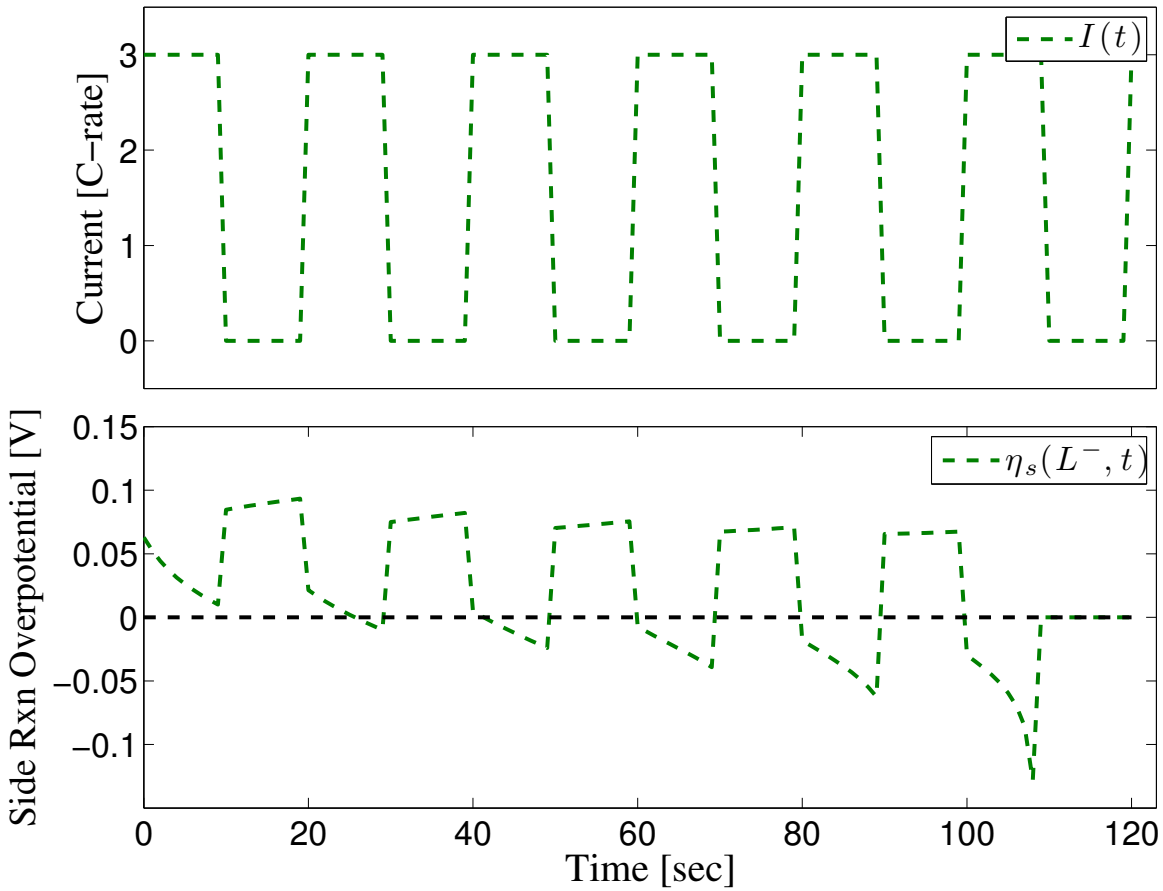
$$\beta^*[k] = \max\{\beta \in [0,1] : (x(t), z(t)) \in \mathcal{O}\}$$

Def'n: Admissible Set $\mathcal{O}$

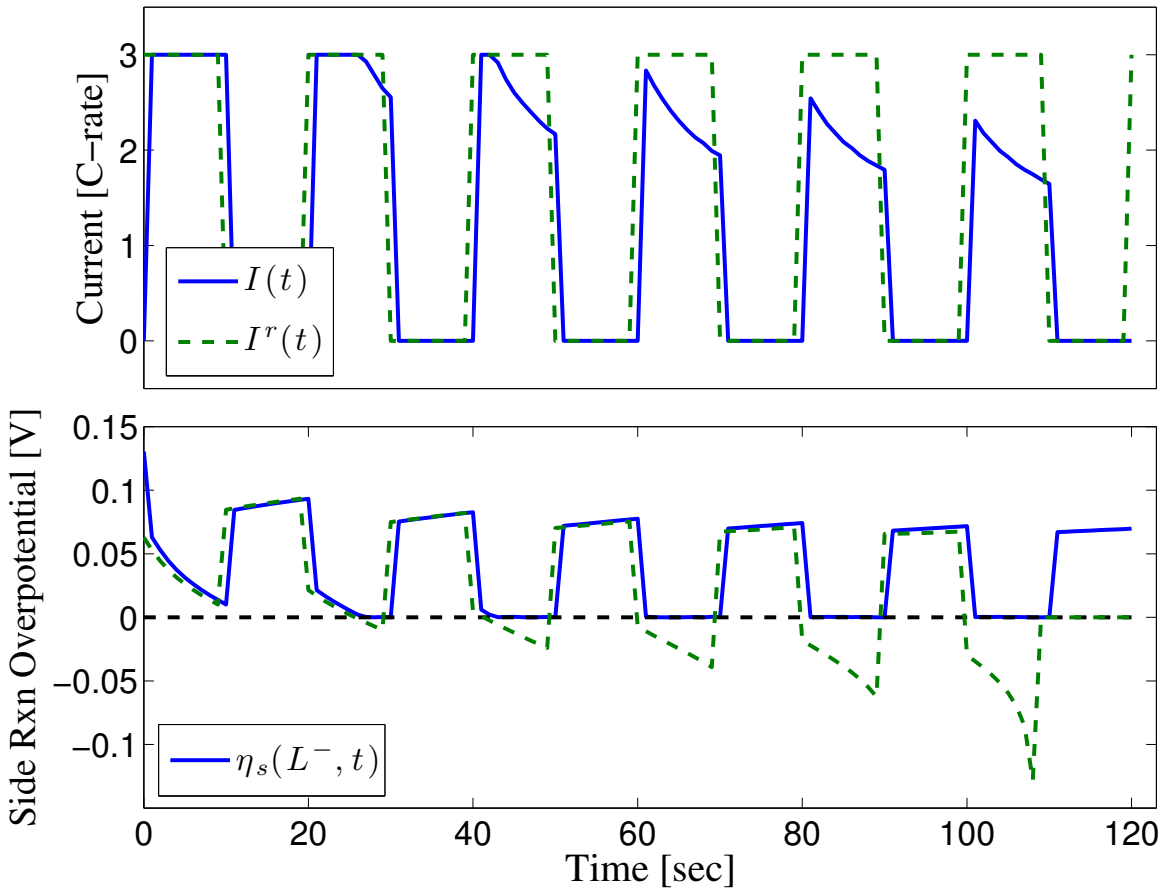
$$\mathcal{O} = \{(x(t), z(t)) : y(\tau) \in \mathcal{Y}, \forall \tau \in [t, t+T_s]\}$$

$$\begin{aligned} \dot{x}(t) &= f(x(t), z(t), \beta I^r) \\ 0 &= g(x(t), z(t), \beta I^r) \\ y(t) &= C_1 x(t) + C_2 z(t) + D \cdot \beta I^r + E \end{aligned}$$

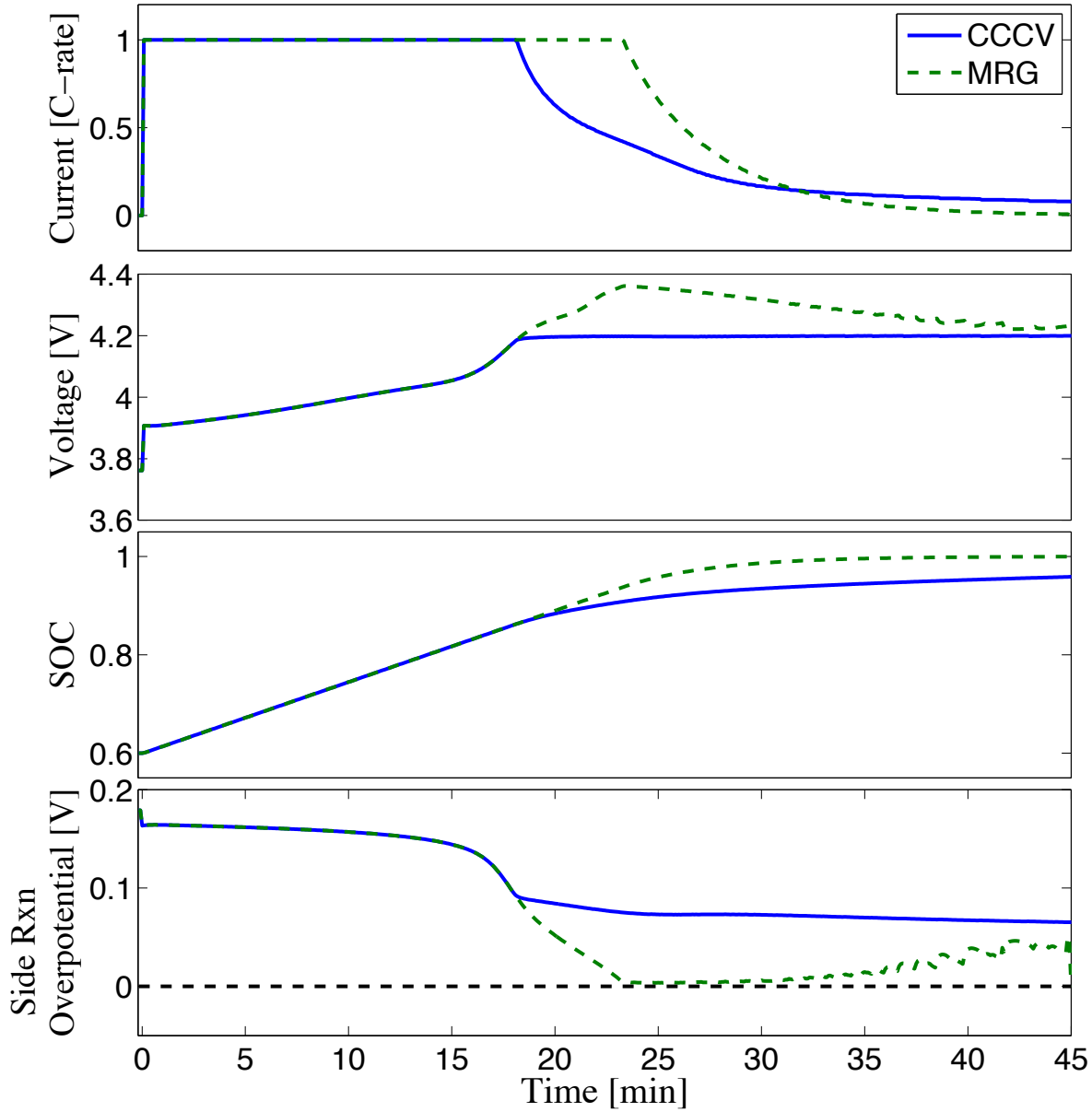
Constrained Control of EChem States



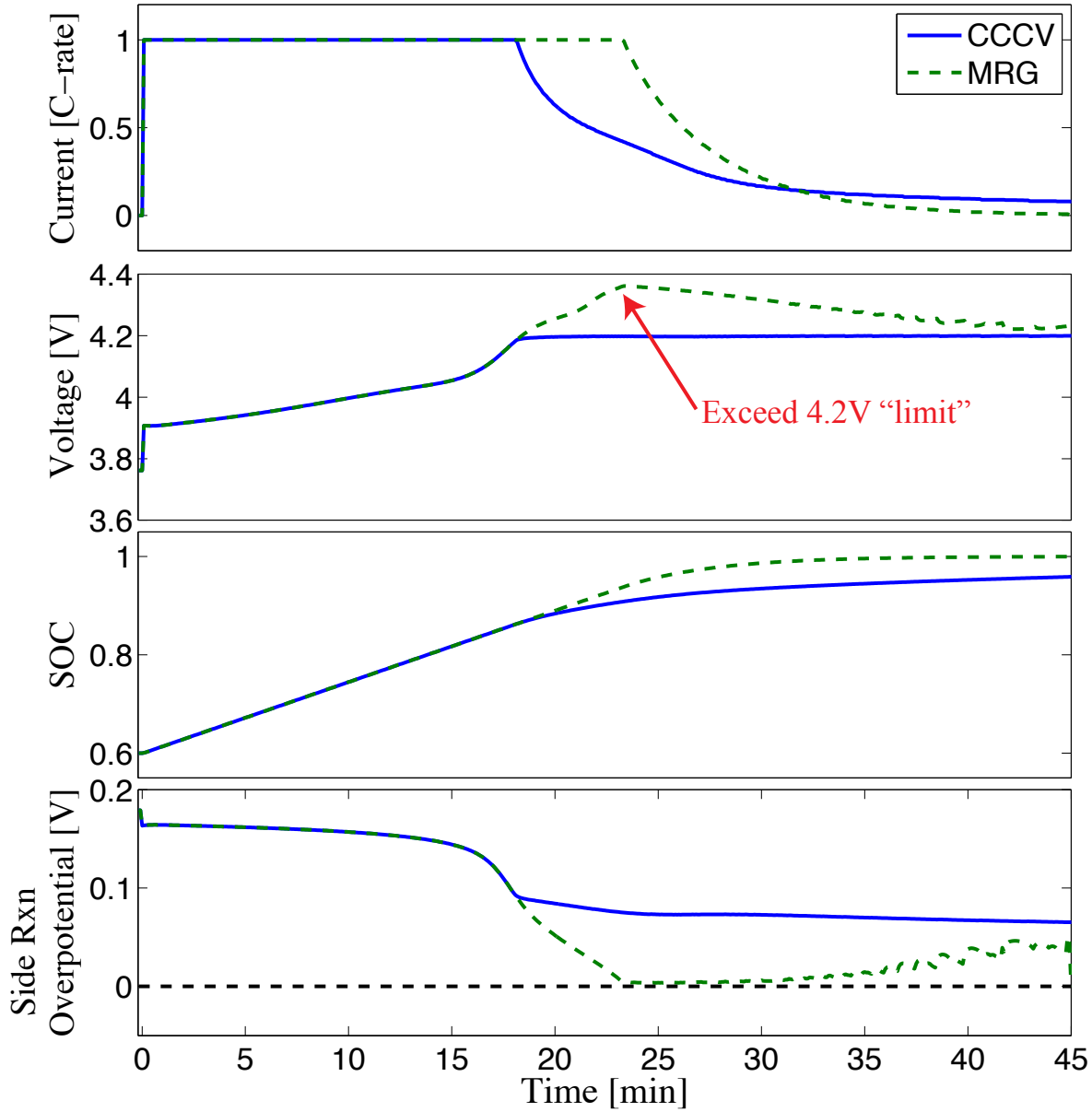
Constrained Control of EChem States



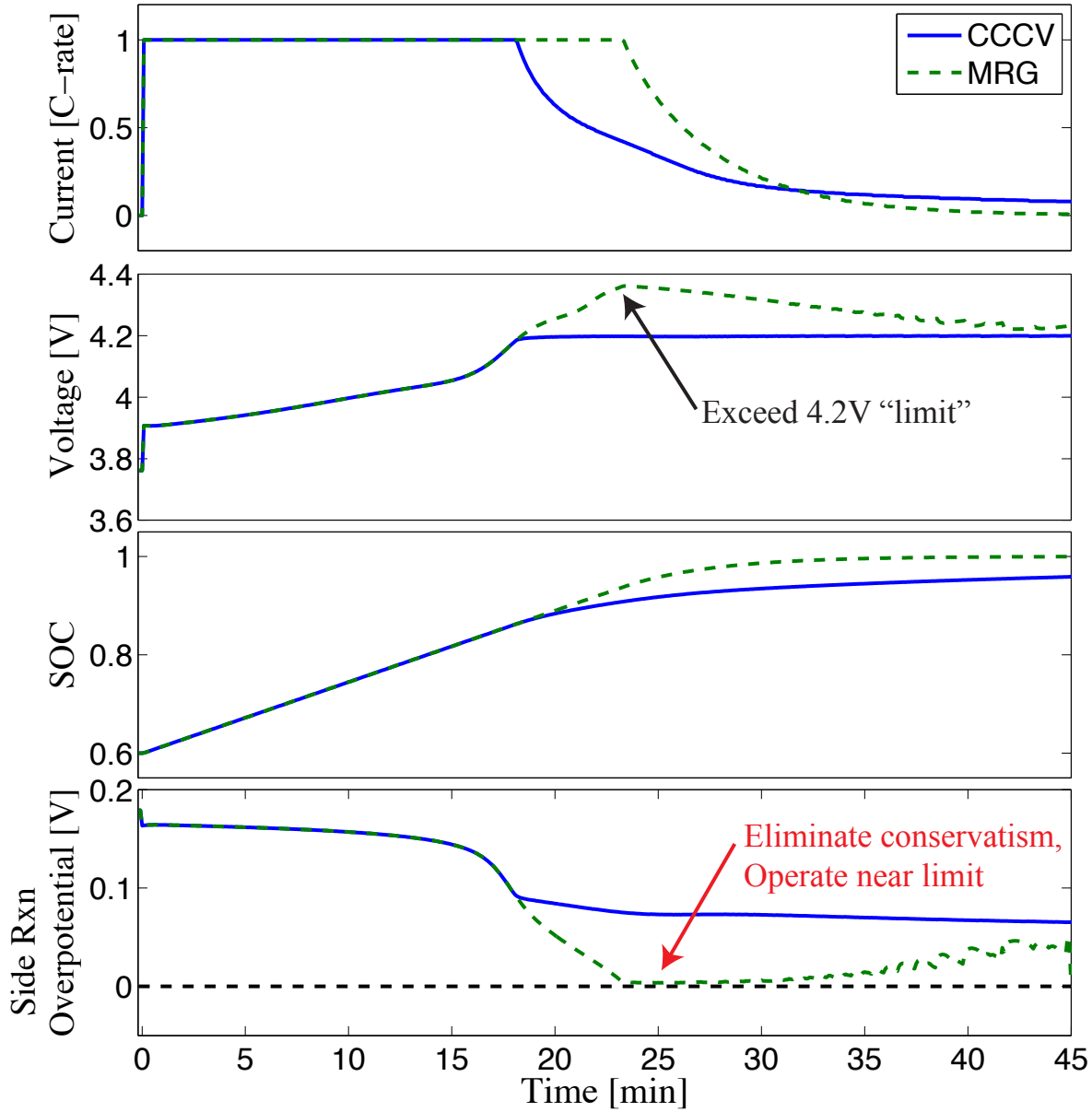
Application to Charging



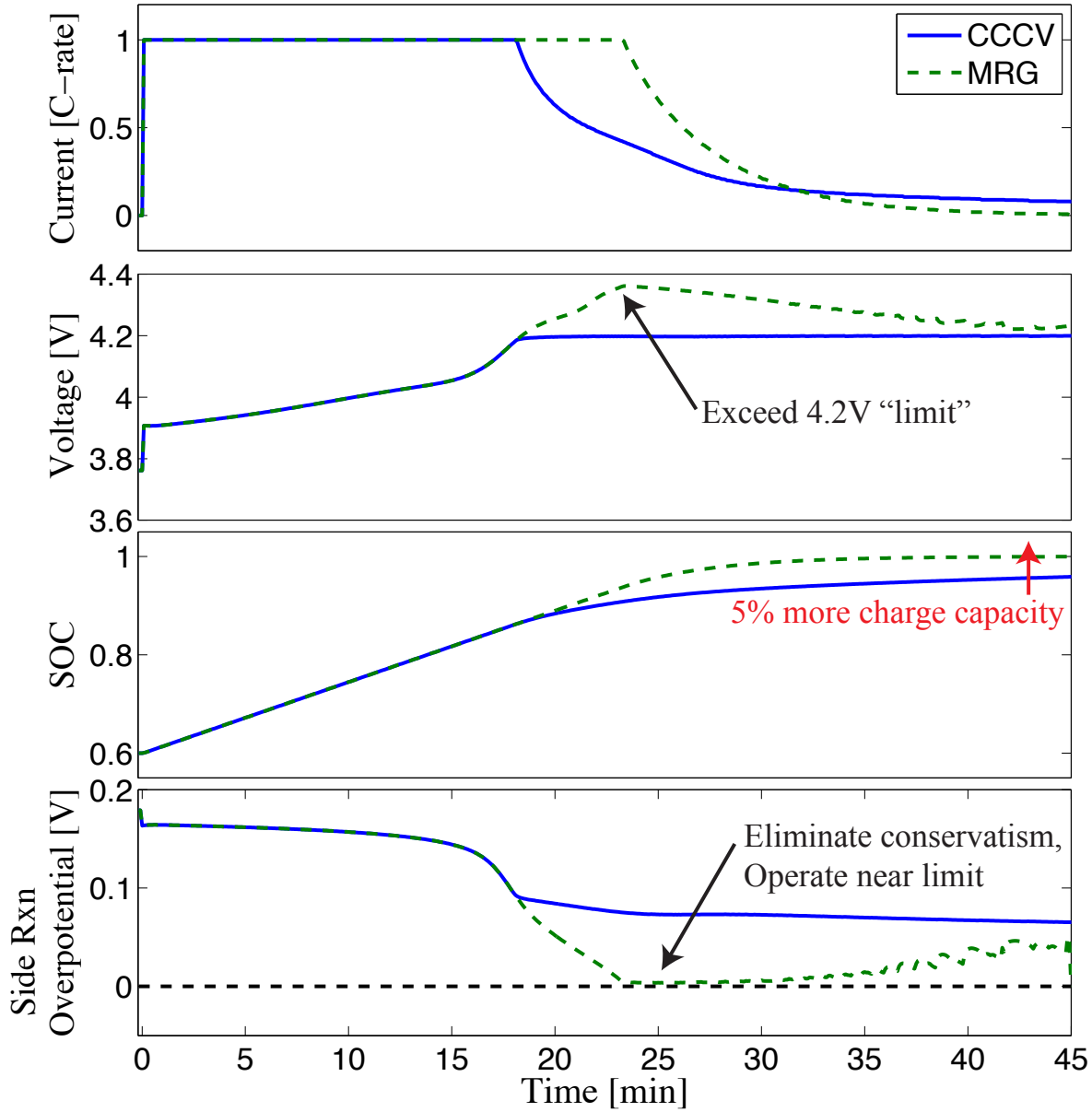
Application to Charging



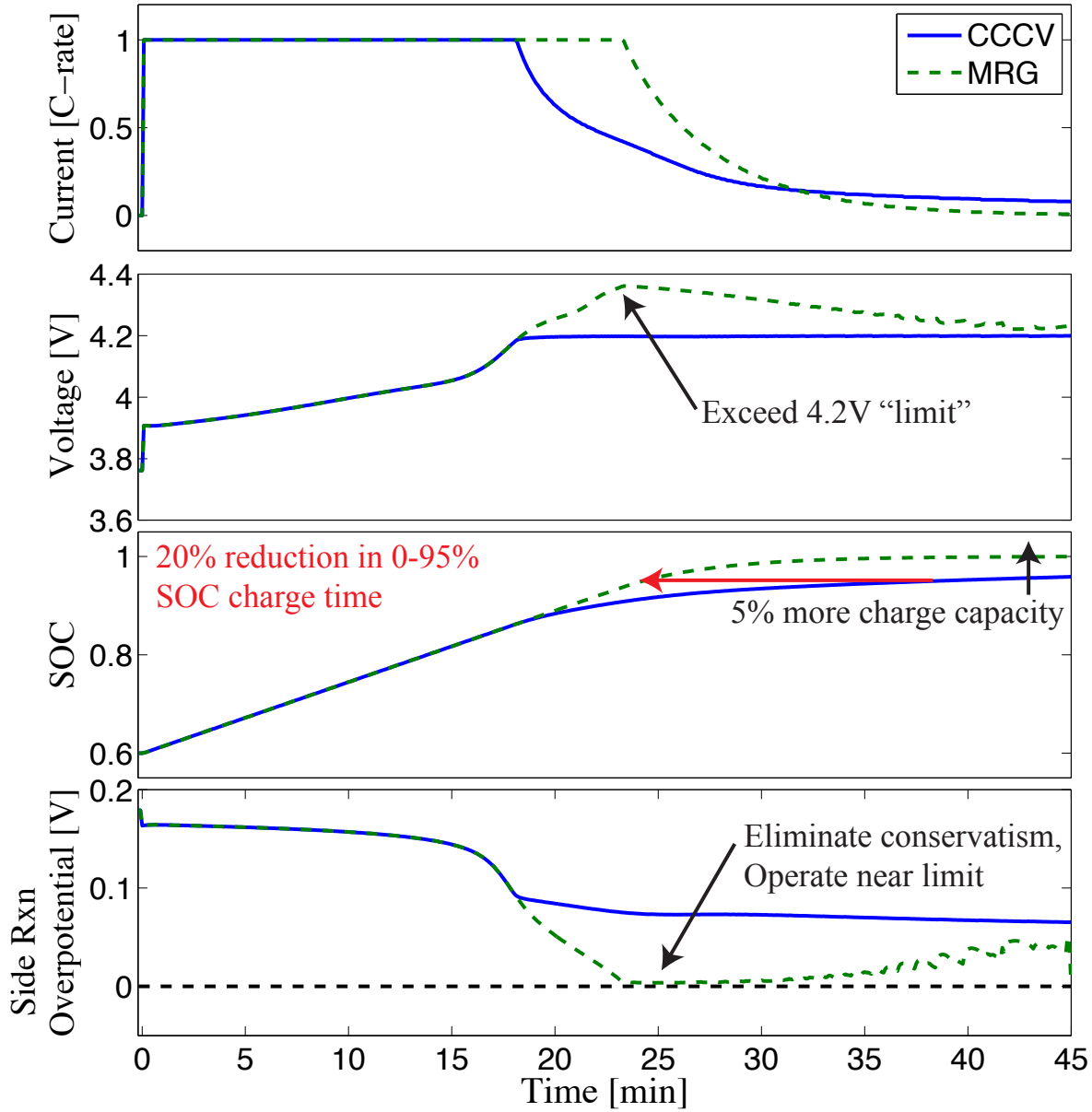
Application to Charging



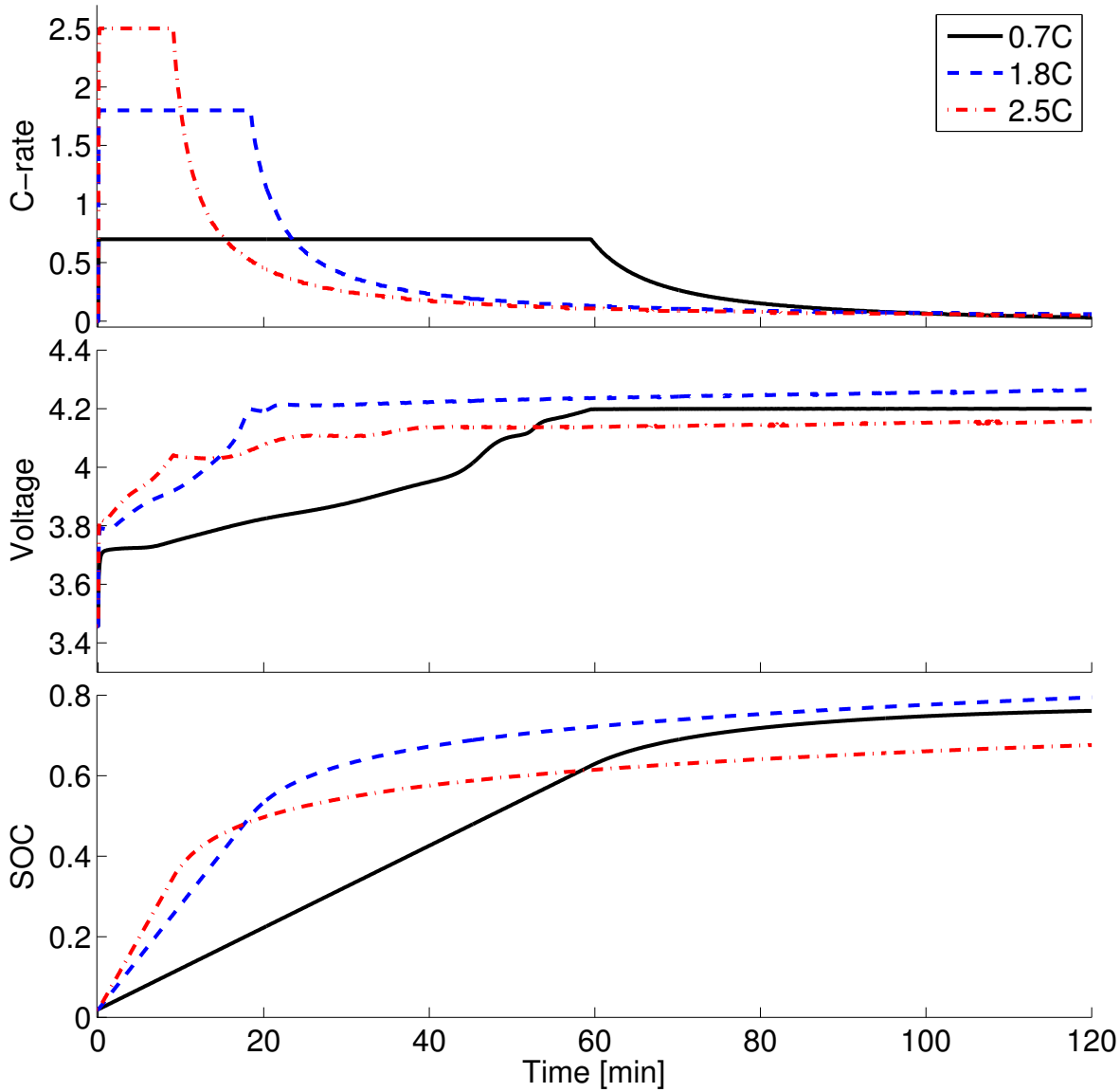
Application to Charging



Application to Charging



Fast Charging



Fast charge your smartphone/EV while getting coffee

Table: Simulated fast charge times for various C-rates

Charge range	**0.7C** | Traditional	**1.8C** | ECC	**2.5C** | ECC
0-10%	7.92 min	3.17 min	2.33 min
0-20%	17.83 min	7.00 min	5.08 min
0-50%	47.33 min	18.42 min	20.50 min

Outline

1. Electrochemistry-based Battery Controls
2. Demand Response of TCLs
3. Coming Soon...

Energy Systems of Interest

Energy storage	Smart Grids
(e.g., batteries)	(e.g., demand response)

Energy Systems of Interest

Energy storage	Smart Grids
(e.g., batteries)	(e.g., demand response)

The Demand Response Problem

Needs:

(1) Integrate renewables, (2) enhance power system resilience & economics

The Demand Response Problem

Needs:

(1) Integrate renewables, (2) enhance power system resilience & economics

Obstacle: Scalability, sensing/control infrastructure

The Demand Response Problem

Needs:
(1) Integrate renewables, (2) enhance power system resilience & economics

Obstacle: Scalability, sensing/control infrastructure

Definition (Thermostatically Controlled Loads):
Systems controlled by on-off actuation, e.g. HVAC, water heaters, freezers

The Demand Response Problem

Needs:
(1) Integrate renewables, (2) enhance power system resilience & economics

Obstacle: Scalability, sensing/control infrastructure

Definition (Thermostatically Controlled Loads):
Systems controlled by on-off actuation, e.g. HVAC, water heaters, freezers

Some Interesting Facts

Thermostatically Controlled Loads (TCLs)	50% of U.S. electricity consumption is TCLs
	11% of thermostats are programmed
	Comfort is loosely coupled with control

The Demand Response Problem

Needs:
(1) Integrate renewables, (2) enhance power system resilience & economics

Obstacle: Scalability, sensing/control infrastructure

Definition (Thermostatically Controlled Loads):
Systems controlled by on-off actuation, e.g. HVAC, water heaters, freezers

Some Interesting Facts

Thermostatically Controlled Loads (TCLs)	50% of U.S. electricity consumption is TCLs
	11% of thermostats are programmed
	Comfort is loosely coupled with control

The Punchline

Exploit flexibility of TCLs for power system services

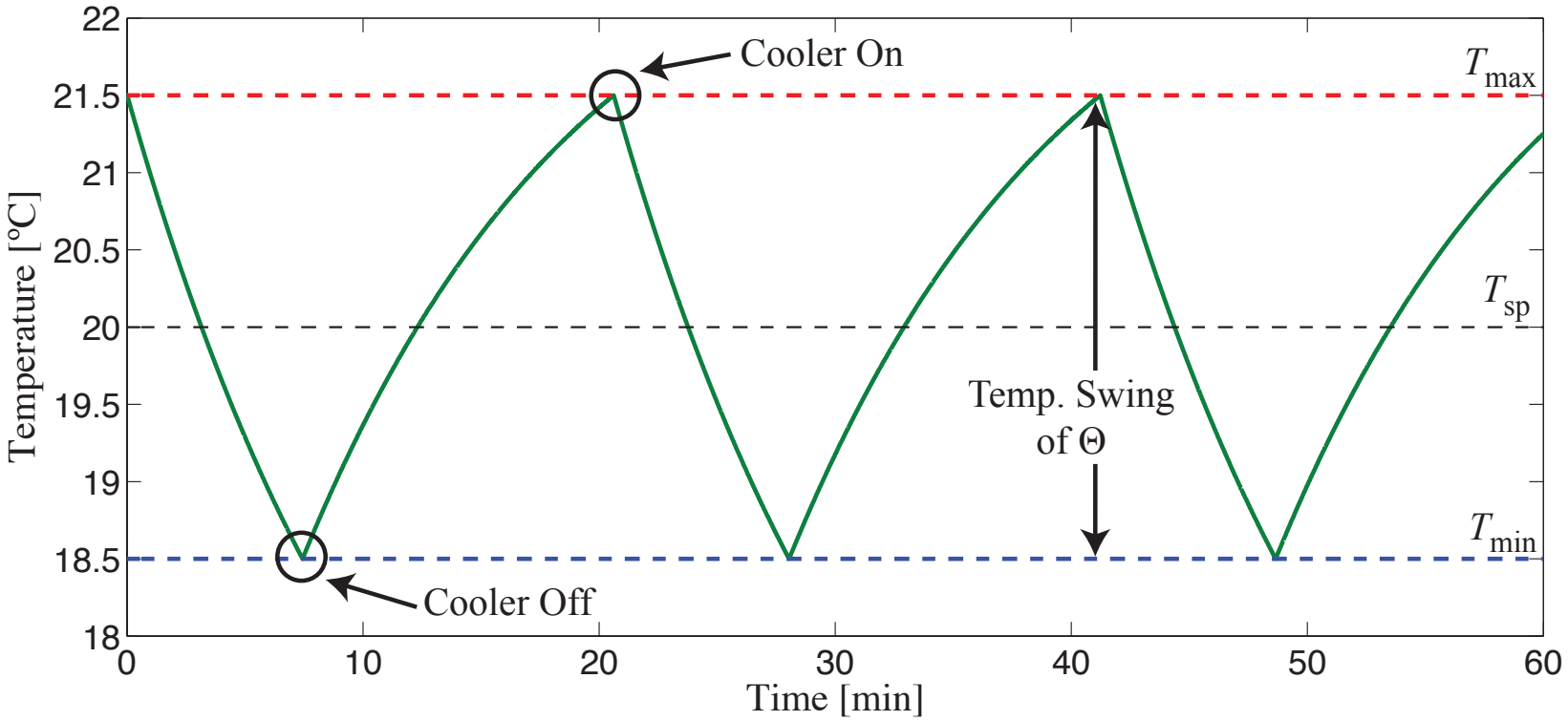
Relevant Literature (non-exclusive)

Reference	**Models***	**Control**	**ParamID**	**State Est.**
Malhame & Chong, *TAC* (1985)	FP			
Callaway, *EC&M* (2009)	FP		X	
Kundu et al., *PSCC* (2011)	IO	X		
Perfumo et al., *EC&M* (2012)	IO	X		
Bashash & Fathy, *TCST* (2013)	PDE	X		
Mathieu et al., *TPS* (2013)	MC	X	X	X
Zhang et al., *TPS* (2013)	SS	X		
SM, VR, JB, AG	PDE	X	X	X

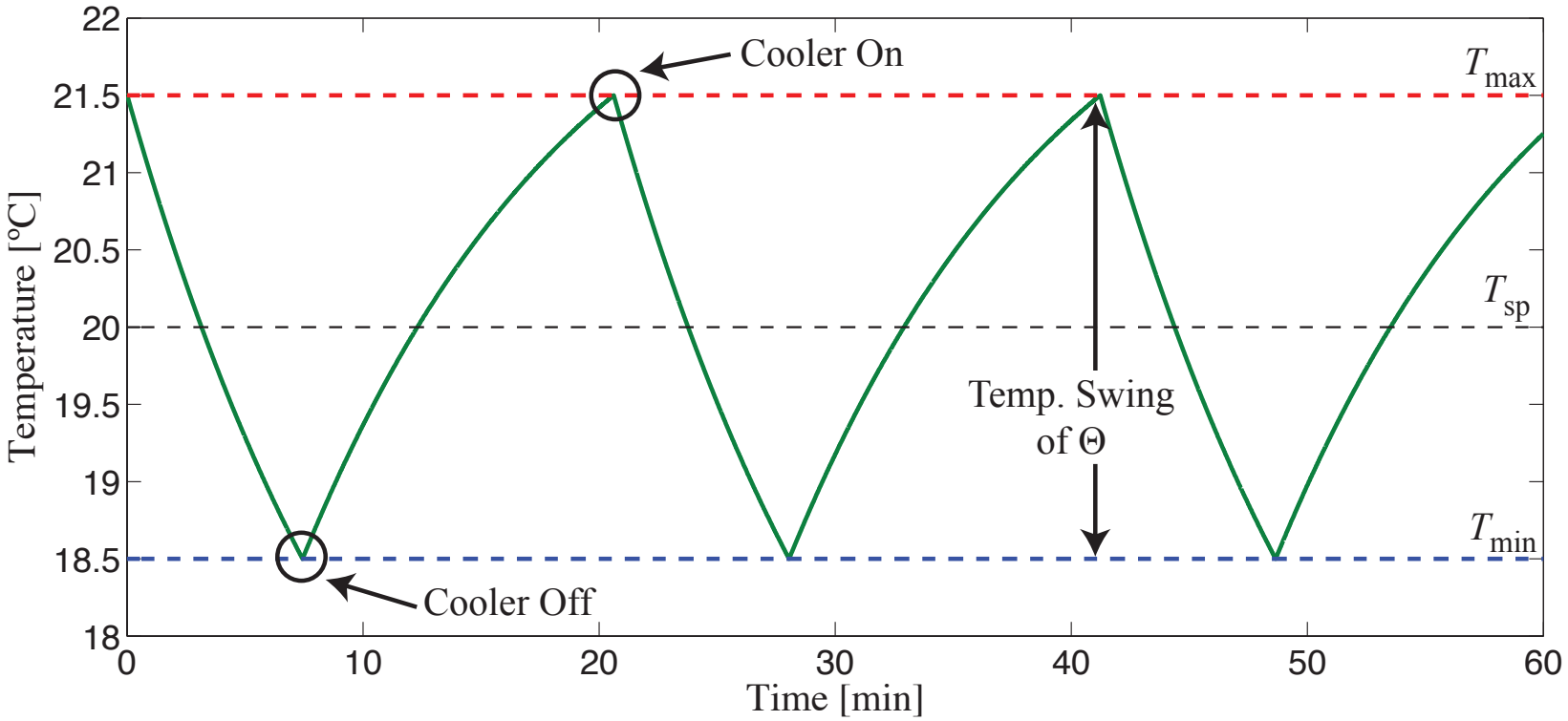
* Fokker-Planck (FP), Input-output (IO), Partial diff. eqn. (PDE), Markov chain (MC), State-space (SS)

Models heterogeneous populations of TCLs.

Modeling TCLs



Modeling TCLs



$$\dot{T}_i(t) = \frac{1}{R_i C_i}\left[T_\infty - T_i(t) - s_i(t) R_i P_i\right], \quad i = 1, 2, \ldots, N$$

$$s_i \in \{0, 1\}$$

Modeling Aggregated TCLs

Main Idea: Convert 1000+ ODEs into two coupled linear PDEs

Modeling Aggregated TCLs

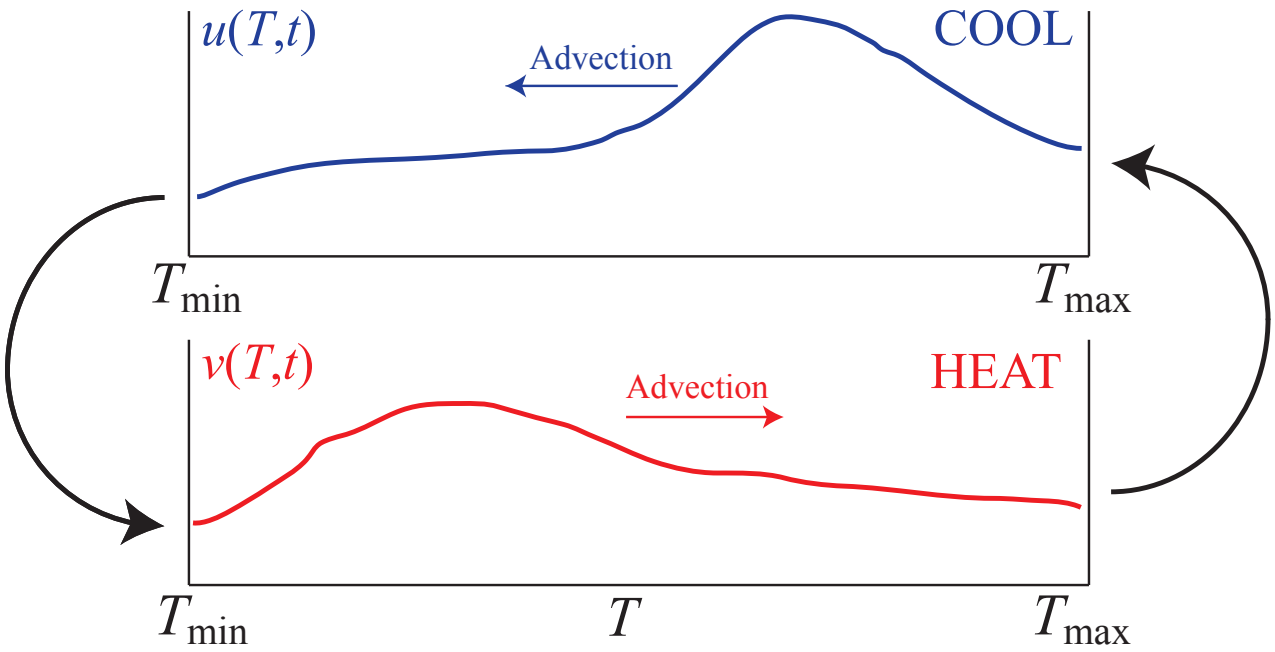
Main Idea: Convert 1000+ ODEs into two coupled linear PDEs

$u(T,t)$	# TCLs / °C, in COOL state, @ temp T, time t
$v(T,t)$	# TCLs / °C, in HEAT state, @ temp T, time t

Modeling Aggregated TCLs

Main Idea: Convert 1000+ ODEs into two coupled linear PDEs

$u(T,t)$	# TCLs / °C, in COOL state, @ temp T, time t
$v(T,t)$	# TCLs / °C, in HEAT state, @ temp T, time t



Modeling Aggregated TCLs

Main Idea: Convert 1000+ ODEs into two coupled linear PDEs

$u(T,t)$	# TCLs / °C, in COOL state, @ temp T, time t
$v(T,t)$	# TCLs / °C, in HEAT state, @ temp T, time t

Flux of TCLs in HEAT state:

#TCLs / sec

$$\psi(T,t) = v(T,t)\frac{dT}{dt}(t) = \frac{1}{RC}\left[T_\infty - T(t)\right] v(T,t)$$

Modeling Aggregated TCLs

Main Idea: Convert 1000+ ODEs into two coupled linear PDEs

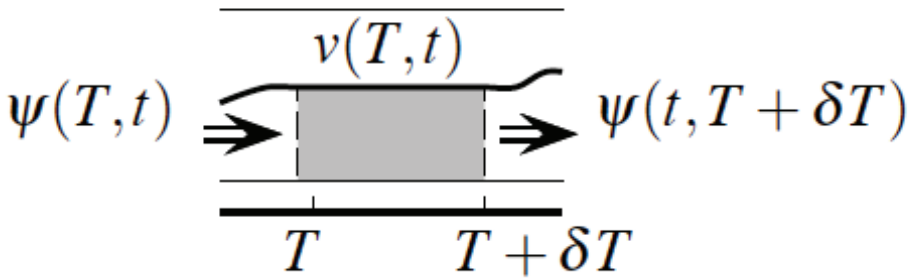
$u(T,t)$	# TCLs / °C, in COOL state, @ temp T, time t
$v(T,t)$	# TCLs / °C, in HEAT state, @ temp T, time t

Flux of TCLs in HEAT state:

#TCLs / sec

$$\psi(T,t) = v(T,t)\frac{dT}{dt}(t) = \frac{1}{RC}\left[T_\infty - T(t)\right] v(T,t)$$

Control volume:



Modeling Aggregated TCLs

Main Idea: Convert 1000+ ODEs into two coupled linear PDEs

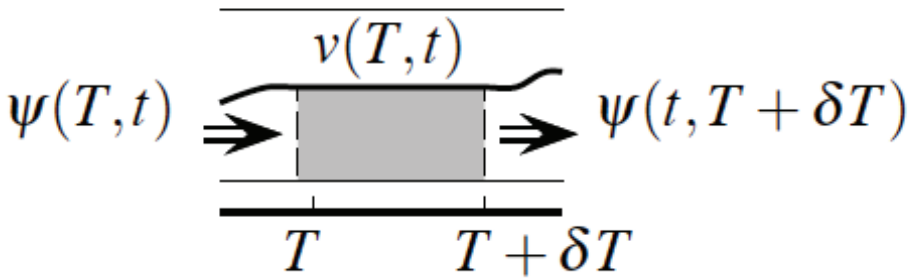
$u(T,t)$	# TCLs / °C, in COOL state, @ temp T, time t
$v(T,t)$	# TCLs / °C, in HEAT state, @ temp T, time t

Flux of TCLs in HEAT state:

#TCLs / sec

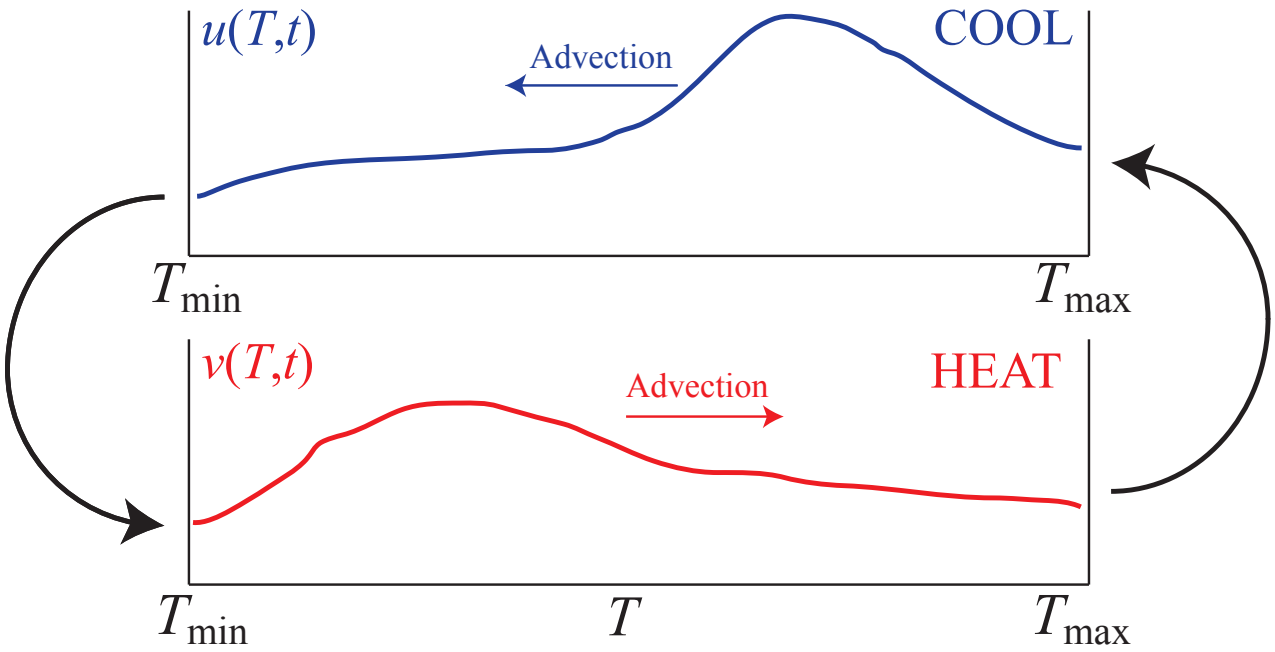
$$\psi(T,t) = v(T,t)\frac{dT}{dt}(t) = \frac{1}{RC}\left[T_\infty - T(t)\right] v(T,t)$$

Control volume:

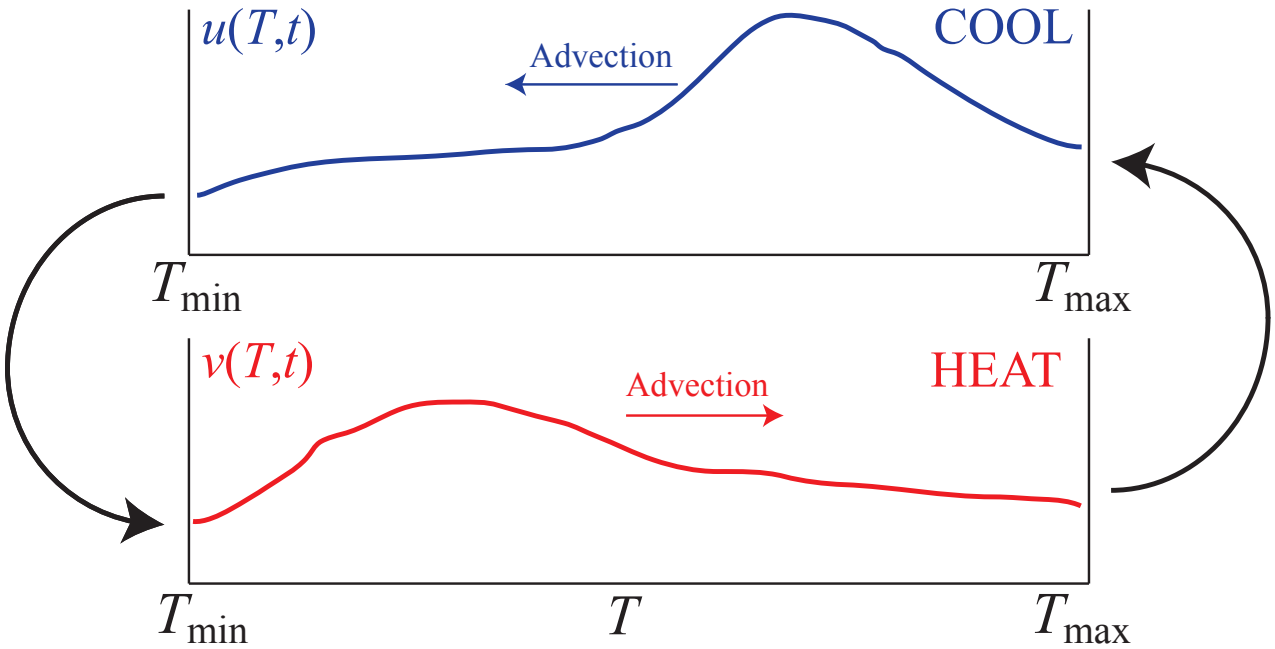


$$\begin{aligned}\frac{\partial v}{\partial t}(T,t) &= \lim_{\delta T \to 0}\left[\frac{\psi(T+\delta T,t)-\psi(T,t)}{\delta T}\right] \\ &= \frac{\partial \psi}{\partial T}(T,t) \\ &= -\frac{1}{RC}\left[T_\infty - T(t)\right]\frac{\partial v}{\partial T}(T,t) + \frac{1}{RC}v(T,t)\end{aligned}$$

PDE Model of Aggregated TCLs



PDE Model of Aggregated TCLs



$$u_t(T,t) = \alpha\lambda(T)u_T(T,t) + \alpha u(T,t)$$

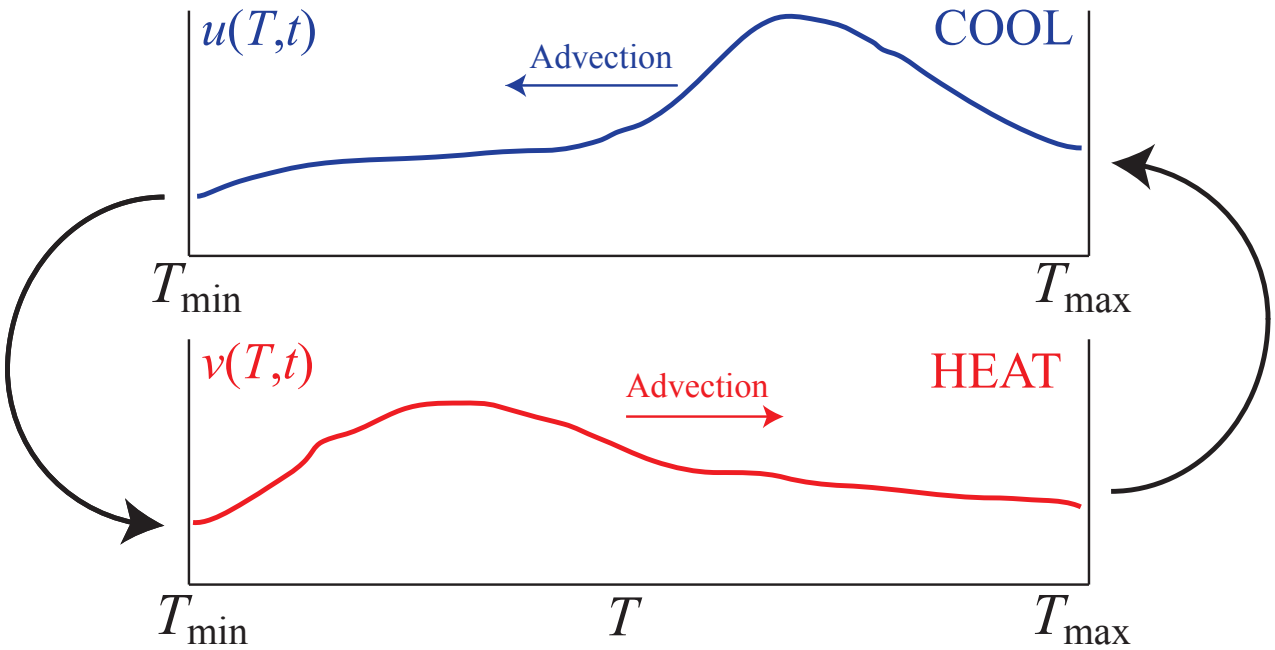
$$v_t(T,t) = -\alpha\mu(T)v_T(T,t) + \alpha v(T,t)$$

$$u(T_{\max},t) = q_1 v(T_{\max},t)$$

$$v(T_{\min},t) = q_2 u(T_{\min},t)$$

Video of 1,000 TCLs

PDE Model of Aggregated TCLs



$$u_t(T,t) = \alpha\lambda(T)u_T(T,t) + \alpha u(T,t)$$

$$v_t(T,t) = -\alpha\mu(T)v_T(T,t) + \alpha v(T,t)$$

$$u(T_{\max},t) = q_1 v(T_{\max},t)$$

$$v(T_{\min},t) = q_2 u(T_{\min},t)$$

Original Idea: Malhame and Chong, Trans. on Automatic Control (1985)

Remark: Assumes homogeneous populations

Modeling Heterogeneous Aggregated TCLs

Reality: TCL populations are heterogeneous
e.g. variable heat capacity, power, deadband sizes

Video of 1,000 heterogeneous TCLs

Modeling Heterogeneous Aggregated TCLs

Reality: TCL populations are heterogeneous
e.g. variable heat capacity, power, deadband sizes

$$
\begin{aligned}
u_t(T,t) &= \alpha\lambda(T)u_T(T,t) + \alpha u(T,t) + \beta u_{TT}(T,t) \\
v_t(T,t) &= -\alpha\mu(T)v_T(T,t) + \alpha v(T,t) + \beta v_{TT}(T,t) \\
u(T_{\max},t) &= q_1 v(T_{\max},t), \qquad u_T(T_{\min},t) = -v_T(T_{\min},t) \\
v(T_{\min},t) &= q_2 u(T_{\min},t), \qquad v_T(T_{\max},t) = -u_T(T_{\max},t)
\end{aligned}
$$

Modeling Heterogeneous Aggregated TCLs

Reality: TCL populations are heterogeneous
e.g. variable heat capacity, power, deadband sizes

$$
\begin{aligned}
u_t(T,t) &= \alpha\lambda(T)u_T(T,t) + \alpha u(T,t) + \beta u_{TT}(T,t) \\
v_t(T,t) &= -\alpha\mu(T)v_T(T,t) + \alpha v(T,t) + \beta v_{TT}(T,t) \\
u(T_{\max},t) &= q_1 v(T_{\max},t), \qquad u_T(T_{\min},t) = -v_T(T_{\min},t) \\
v(T_{\min},t) &= q_2 u(T_{\min},t), \qquad v_T(T_{\max},t) = -u_T(T_{\max},t)
\end{aligned}
$$

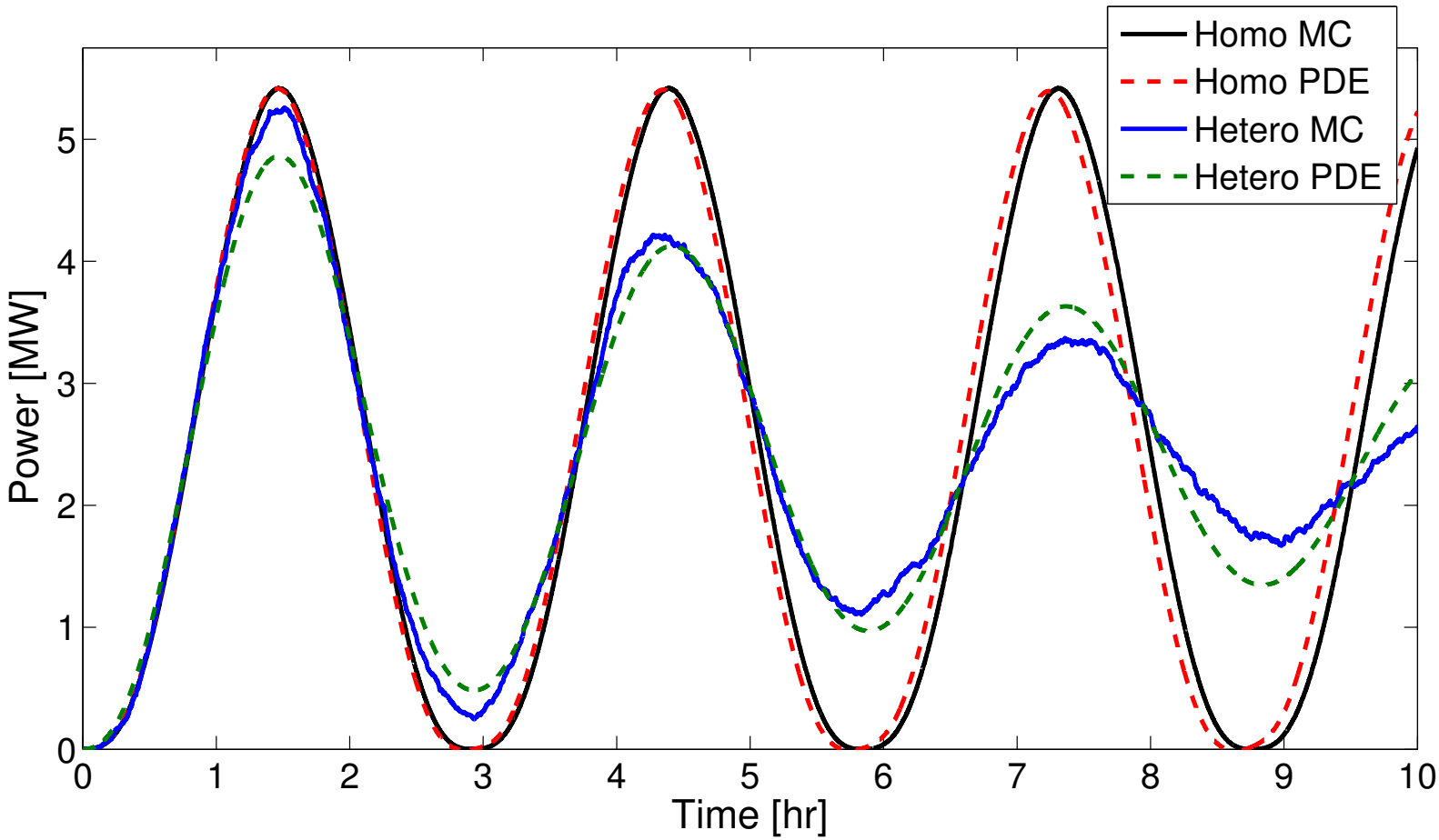
Proposition: The total number of TCLs is conserved over time.

$$
Q(t) = \int_{T_{\min}}^{T_{\max}} u(T,t)dT + \int_{T_{\min}}^{T_{\max}} v(T,t)dT
$$

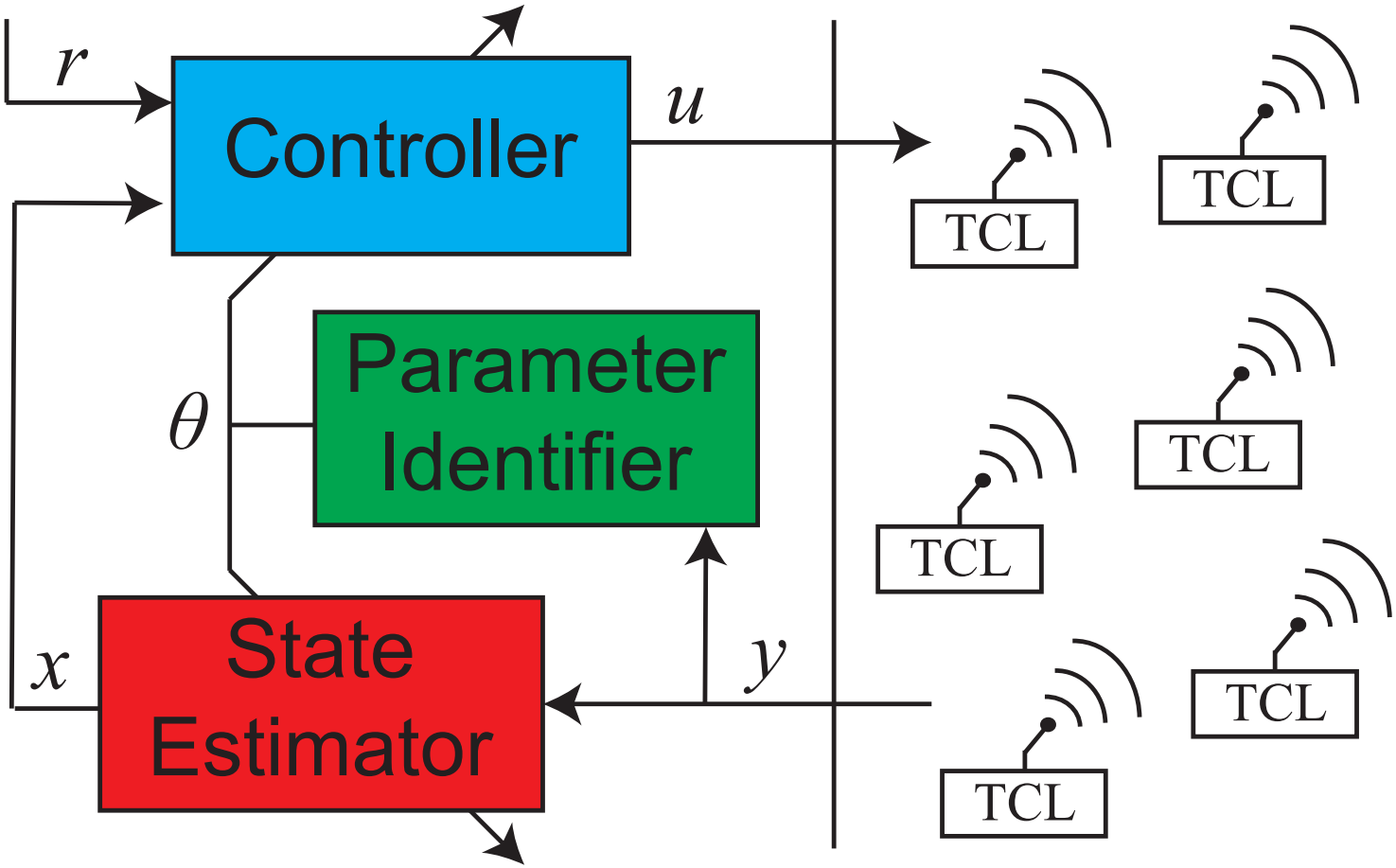
$$
\frac{dQ}{dt}(t) = 0, \qquad \forall t
$$

Video Evolution of Heterogeneous PDE

Model Comparison



Feedback Control System



PDE State Estimator

Heterogeneous PDE Model: (u, v)

$$
\begin{aligned}
u_t(x,t) &= \alpha\lambda(x)u_x + \alpha u + \beta u_{xx} \\
u_x(0,t) &= -v_x(0,t) \\
u(1,t) &= q_1 v(1,t)
\end{aligned}
$$

$$
\begin{aligned}
v_t(x,t) &= -\alpha\mu(x)v_x + \alpha v + \beta v_{xx} \\
v(0,t) &= q_2 u(0,t) \\
v_x(1,t) &= -u_x(1,t)
\end{aligned}
$$

Measurements?

- $u(0,t), v(1,t)$
- $u_x(1,t), v_x(0,t)$

PDE State Estimator

Estimator: $(\hat{u}, \hat{v})$

$$
\begin{aligned}
\hat{u}_t(x,t) &= \alpha\lambda(x)\hat{u}_x + \alpha\hat{u} + \beta\hat{u}_{xx} + p_1(x)\left[u(0,t) - \hat{u}(0,t)\right] \\
\hat{u}_x(0,t) &= -v_x(0,t) + p_{10}\left[u(0,t) - \hat{u}(0,t)\right] \\
\hat{u}(1,t) &= q_1 v(1,t)
\end{aligned}
$$

$$
\begin{aligned}
\hat{v}_t(x,t) &= -\alpha\mu(x)\hat{v}_x + \alpha\hat{v} + \beta\hat{v}_{xx} + p_2(x)\left[v(1,t) - \hat{v}(1,t)\right] \\
\hat{v}(0,t) &= q_2 u(0,t) \\
\hat{v}_x(1,t) &= -u_x(1,t) + p_{20}\left[v(1,t) - \hat{v}(1,t)\right]
\end{aligned}
$$

PDE State Estimator

Estimation Error Dynamics: $(\tilde{u}, \tilde{v}) = (u - \hat{u}, v - \hat{v})$

$$
\begin{aligned}
\tilde{u}_t(x,t) &= \alpha\lambda(x)\tilde{u}_x + \alpha\tilde{u} + \beta\tilde{u}_{xx} - p_1(x)\tilde{u}(0,t) \\
\tilde{u}_x(0,t) &= -p_{10}\tilde{u}(0,t) \\
\tilde{u}(1,t) &= 0
\end{aligned}
$$

$$
\begin{aligned}
\tilde{v}_t(x,t) &= -\alpha\mu(x)\tilde{v}_x + \alpha\tilde{v} + \beta\tilde{v}_{xx} - p_2(x)\tilde{v}(1,t) \\
\tilde{v}(0,t) &= 0 \\
\tilde{v}_x(1,t) &= -p_{20}\tilde{v}(1,t)
\end{aligned}
$$

PDE State Estimator

Estimation Error Dynamics: $(\tilde{u}, \tilde{v}) = (u - \hat{u}, v - \hat{v})$

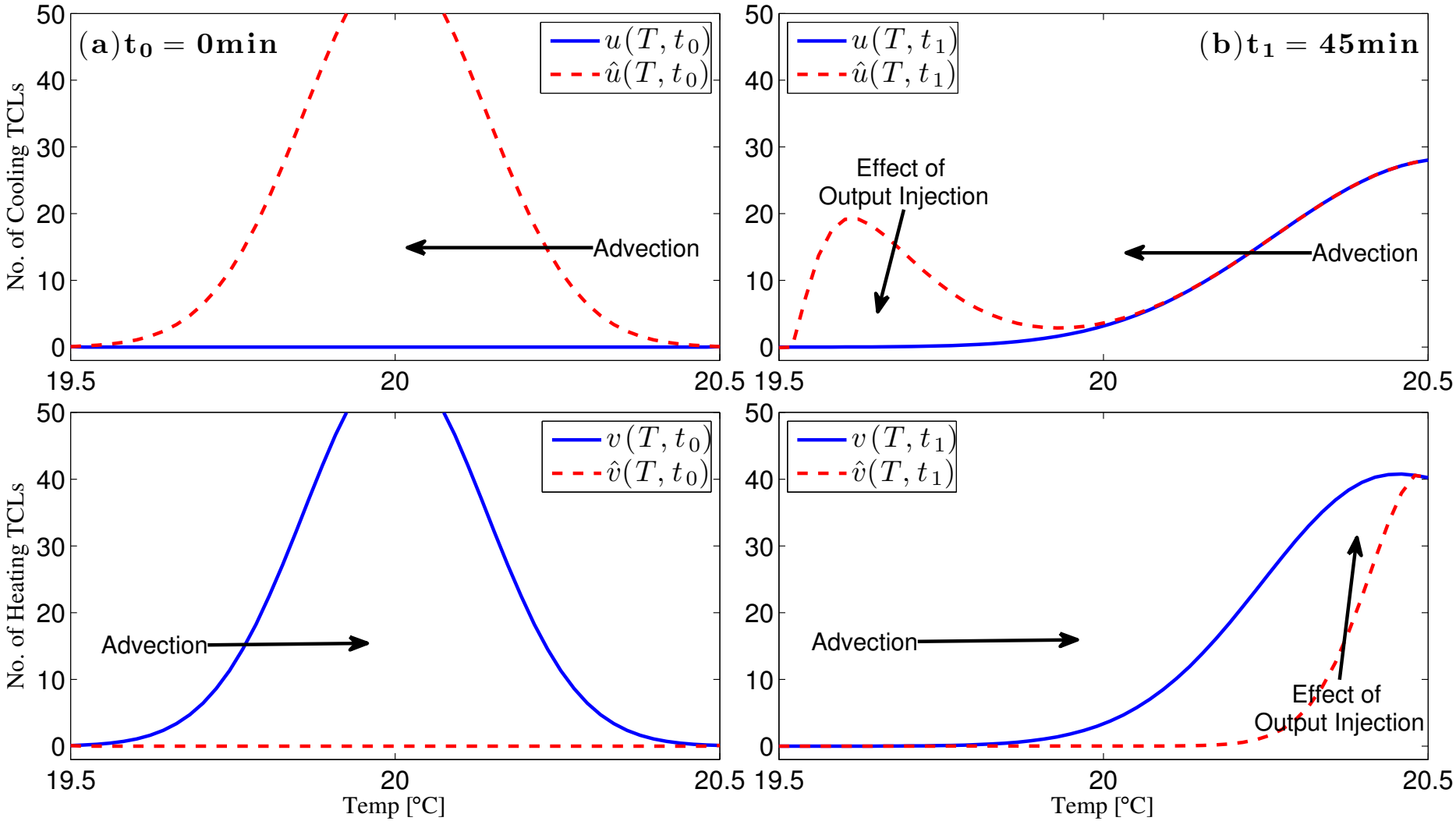
$$
\begin{aligned}
\tilde{u}_t(x,t) &= \alpha\lambda(x)\tilde{u}_x + \alpha\tilde{u} + \beta\tilde{u}_{xx} - p_1(x)\tilde{u}(0,t) \\
\tilde{u}_x(0,t) &= -p_{10}\tilde{u}(0,t) \\
\tilde{u}(1,t) &= 0 \\
\\
\tilde{v}_t(x,t) &= -\alpha\mu(x)\tilde{v}_x + \alpha\tilde{v} + \beta\tilde{v}_{xx} - p_2(x)\tilde{v}(1,t) \\
\tilde{v}(0,t) &= 0 \\
\tilde{v}_x(1,t) &= -p_{20}\tilde{v}(1,t)
\end{aligned}
$$

Goal: Design estimation gains:

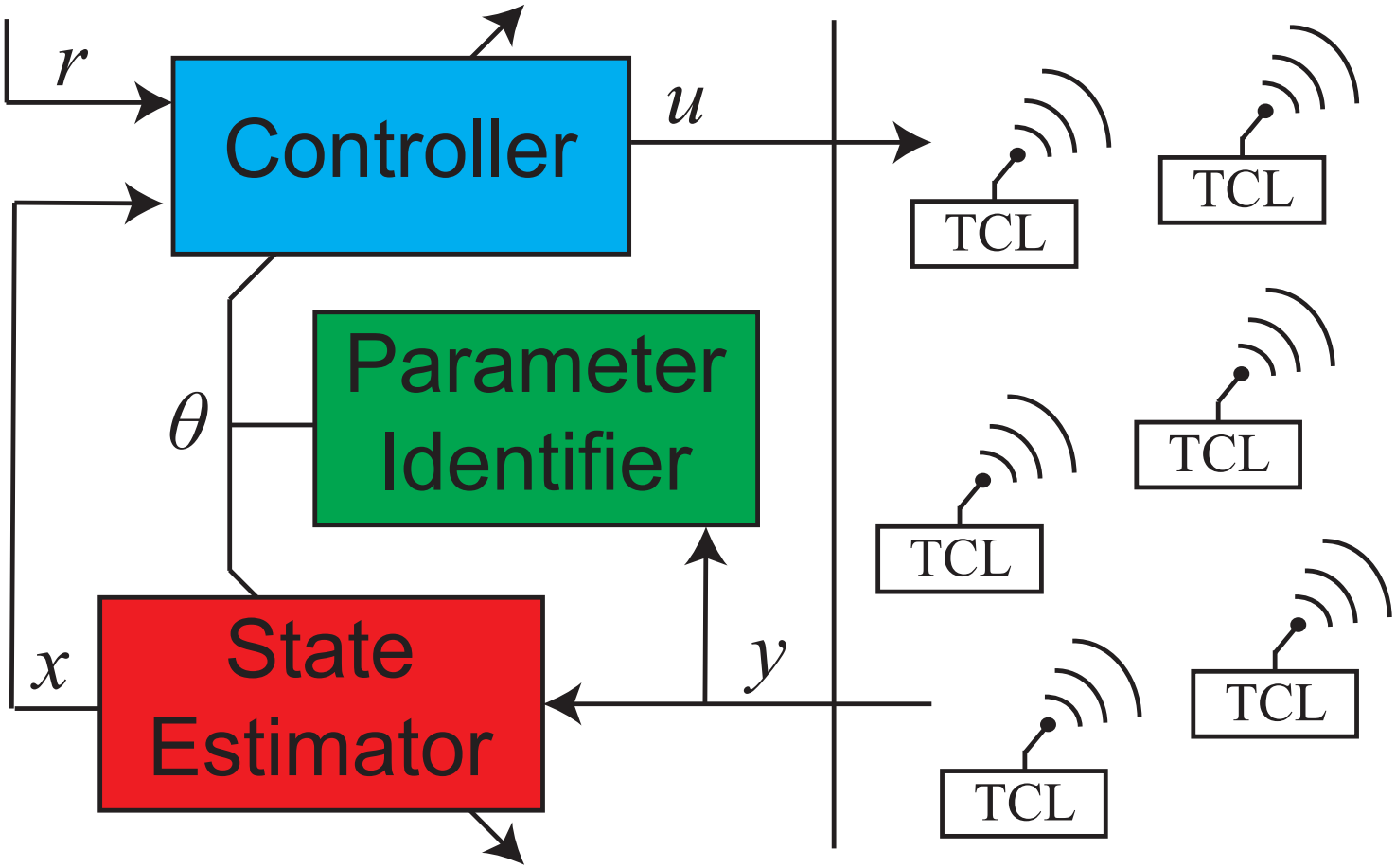
- $p_1(x), p_2(x) : (0,1) \to \mathbb{R}$
- $p_{10}, p_{20} \in \mathbb{R}$

such that $(\tilde{u}, \tilde{v}) = (0,0)$ is exponentially stable

Simulations



Feedback Control System



Parameter Identification

Uncertain parameters

$$u_t(x,t) = \alpha\lambda(x)u_x + \alpha u + \beta u_{xx} \qquad v_t(x,t) = -\alpha\mu(x)v_x + \alpha v + \beta v_{xx}$$
$$u_x(0,t) = -v_x(0,t) \qquad v(0,t) = q_2 u(0,t)$$
$$u(1,t) = q_1 v(1,t) \qquad v_x(1,t) = -u_x(1,t)$$

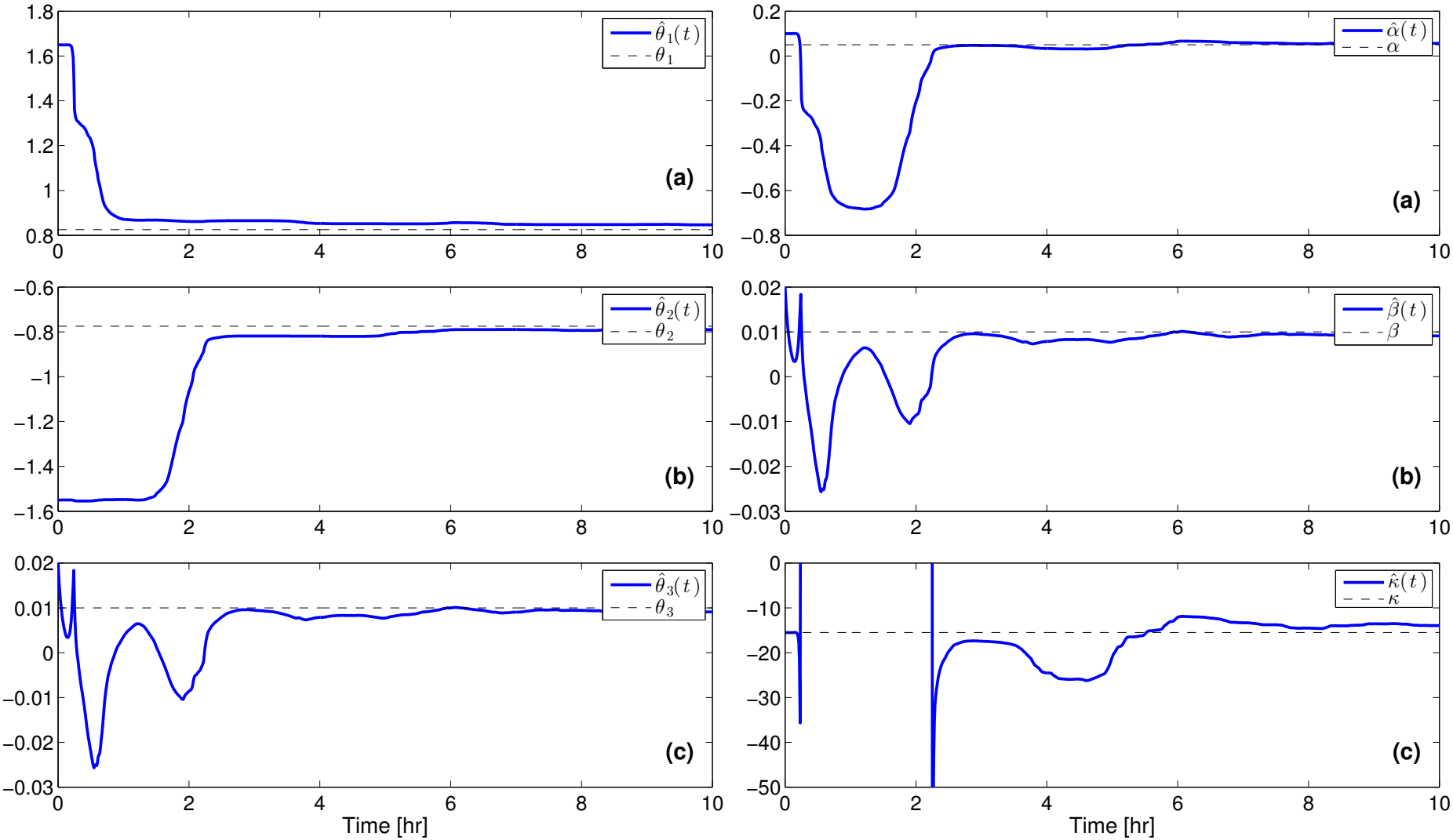
$$P(t) = \frac{\overline{P}}{\eta}\int_0^1 u(x,t)dx$$

Assumptions:

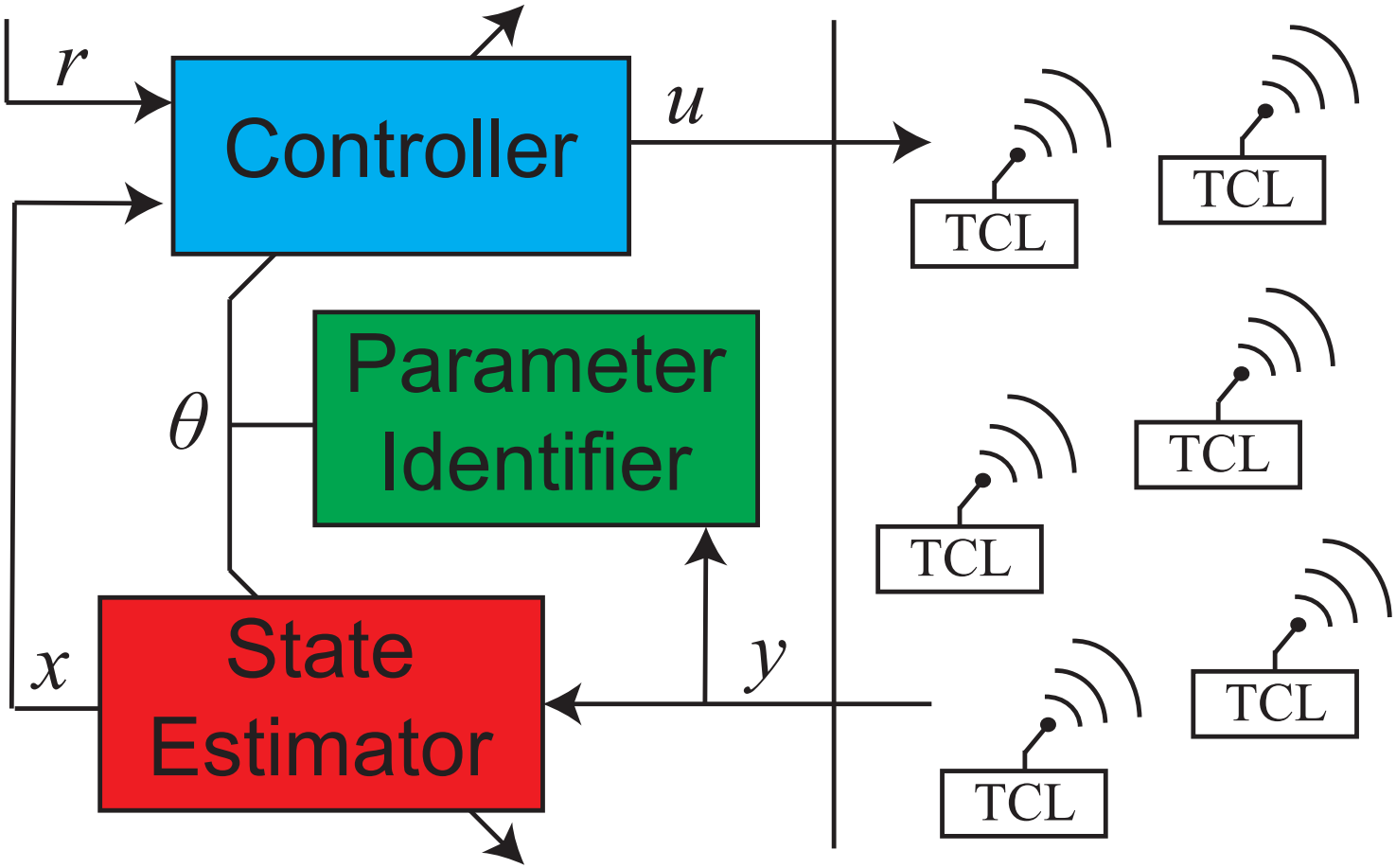
1. Aggregate Power $P(t)$ is measured
2. No. of TCLs switching $u(0,t), u(1,t), u_x(0,t), u_x(1,t)$ is measured

Simulations

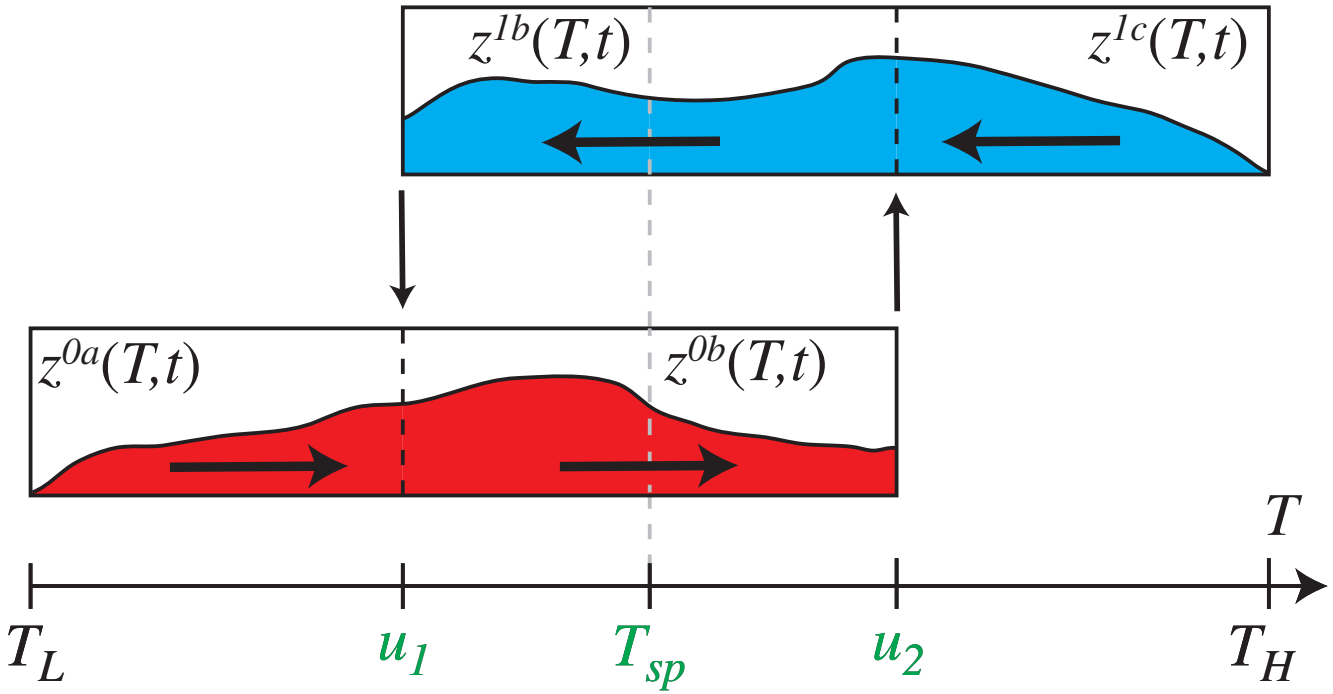
Identified from Population of 1,000 Heterogeneous TCLs



Feedback Control System



Set-point / Deadband Control



$$
\begin{aligned}
z_t^{1j}(T,t) &= \alpha\lambda(T)z_T^{1j}(T,t) + \alpha z^{1j}(T,t), \qquad j \in \{b,c\} \\
z_t^{0j}(T,t) &= -\alpha\mu(T)z_T^{0j}(T,t) + \alpha z^{0j}(T,t), \qquad j \in \{a,b\}
\end{aligned}
$$

with boundary conditions

$$
\begin{aligned}
z^{0a}(T_L,t) &= 0, & z^{0b}(u_1,t) &= z^{0a}(u_1,t) + z^{1b}(u_1,t), \\
z^{1b}(u_2,t) &= z^{1c}(u_2,t) + z^{0b}(u_2,t), & z^{1c}(T_H,t) &= 0
\end{aligned}
$$

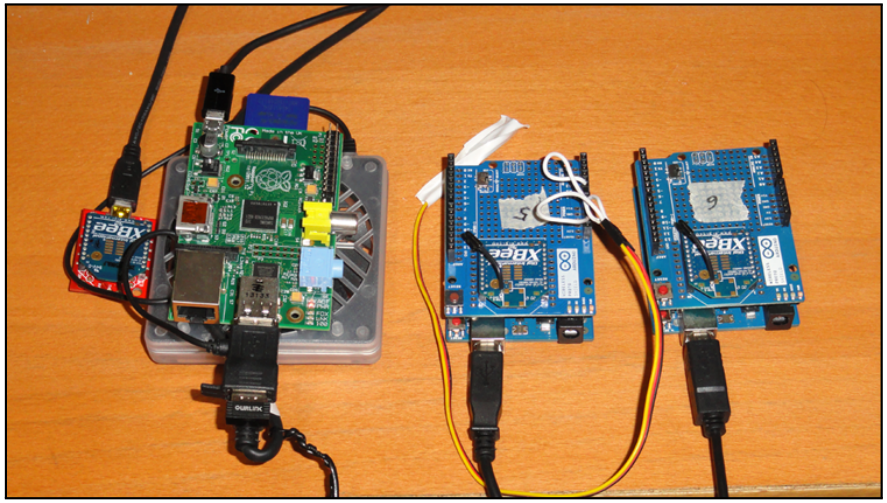
UC San Diego Campus: A Living Laboratory



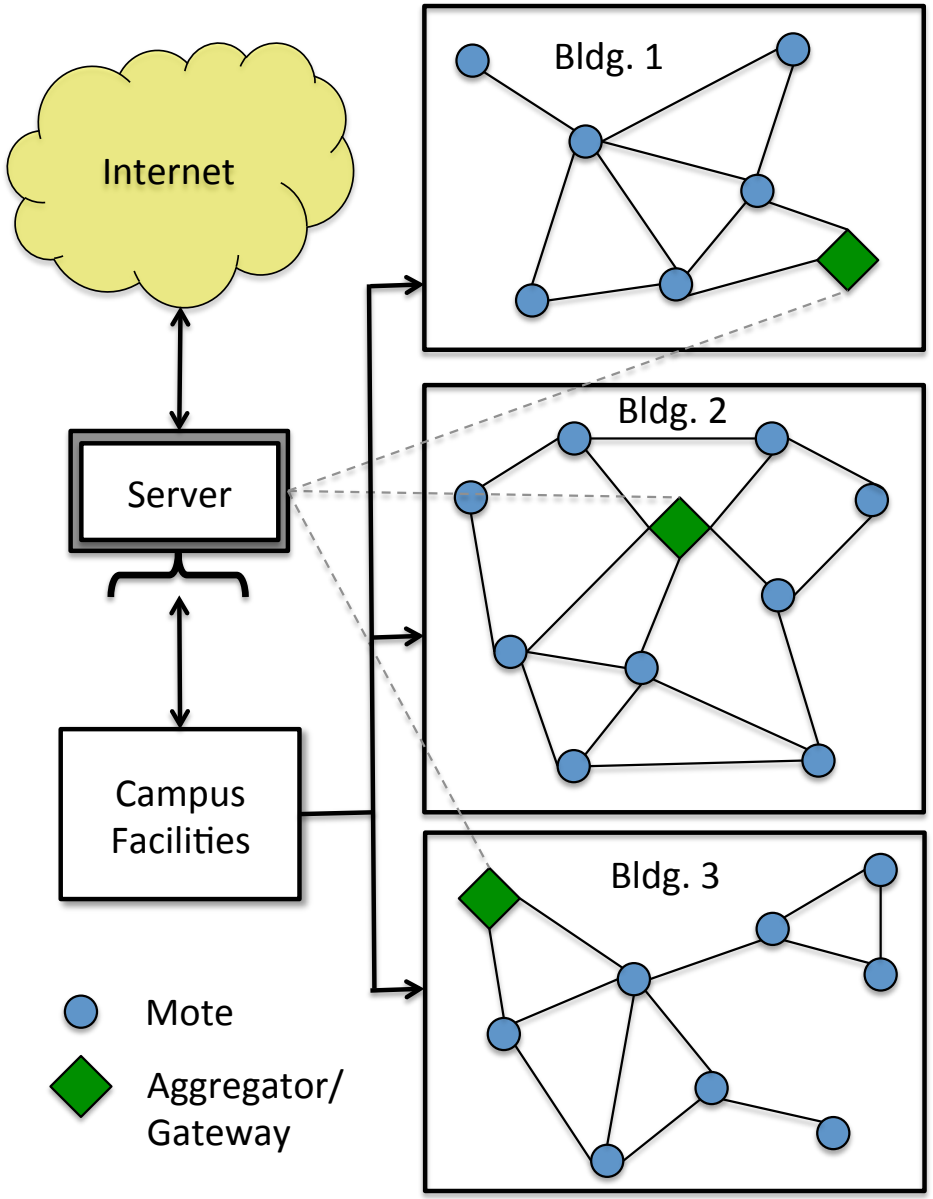
UC San Diego Campus: A Living Laboratory

Goal: DR for Bldg Energy Mgmt

1. Deploy wireless sensor network
2. Model/estimator verification
3. Control design
4. Campus implementation



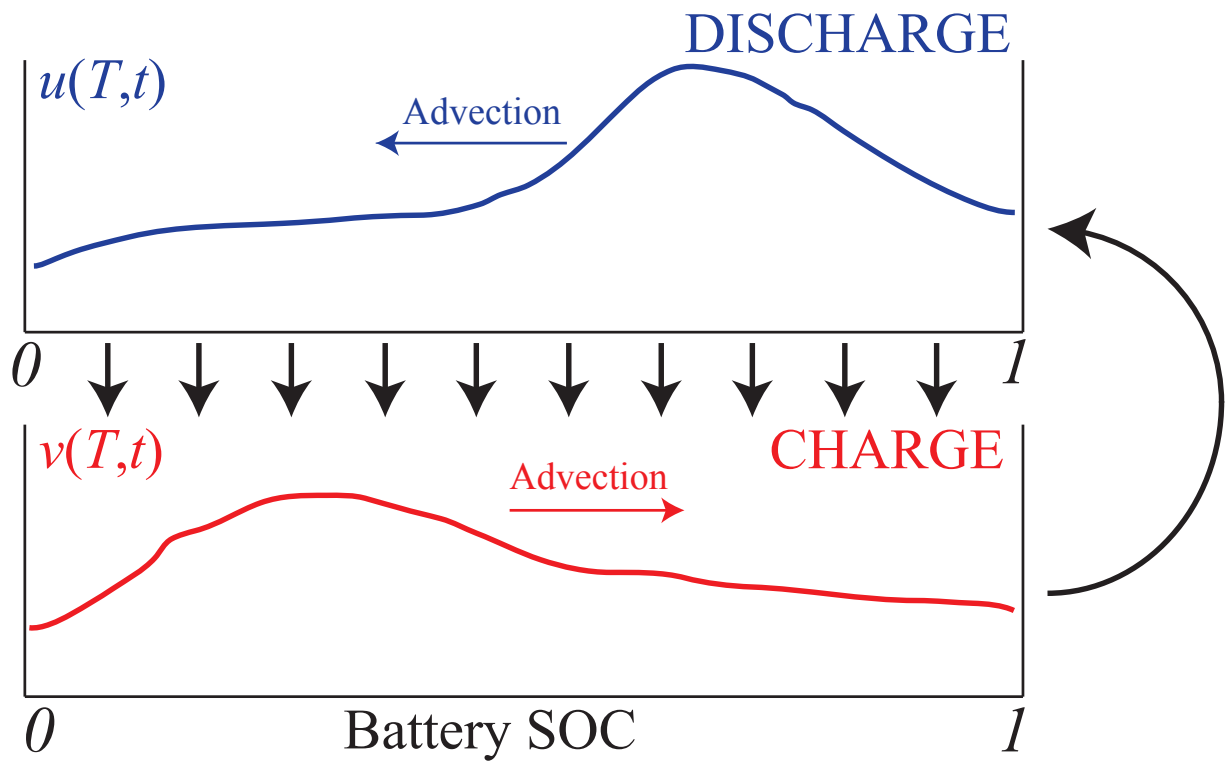
Aggregator (Raspberry Pi) & Sensor Nodes (Arduino)



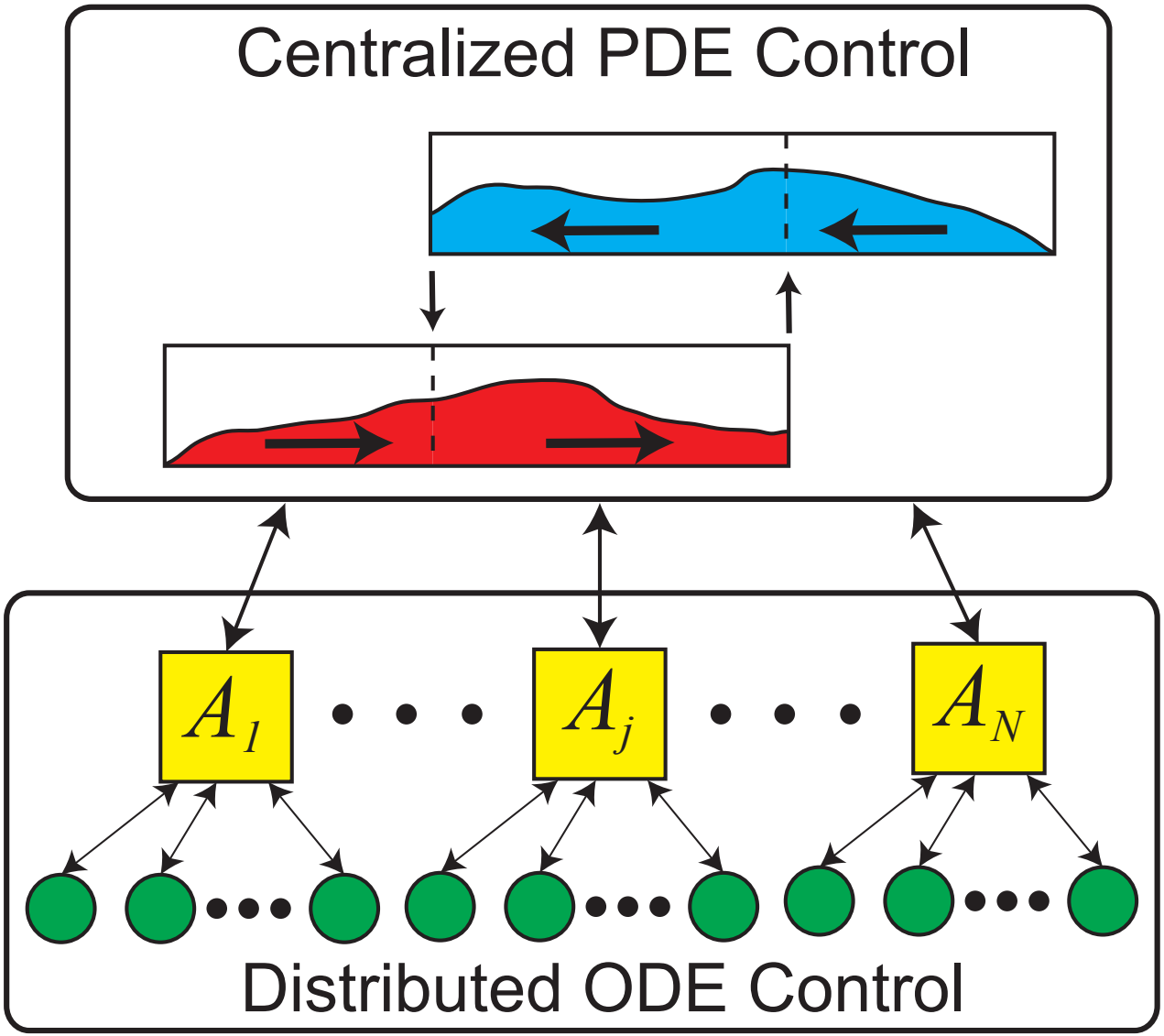
Modeling Aggregated PEVs

Main Idea: Mathematically model as coupled linear PDEs

$u(T,t)$	# PEVs / SOC, in DISCHARGE state, @ SOC x, time t
$v(T,t)$	# PEVs / SOC, in CHARGE state, @ SOC x, time t



Hierarchical Control



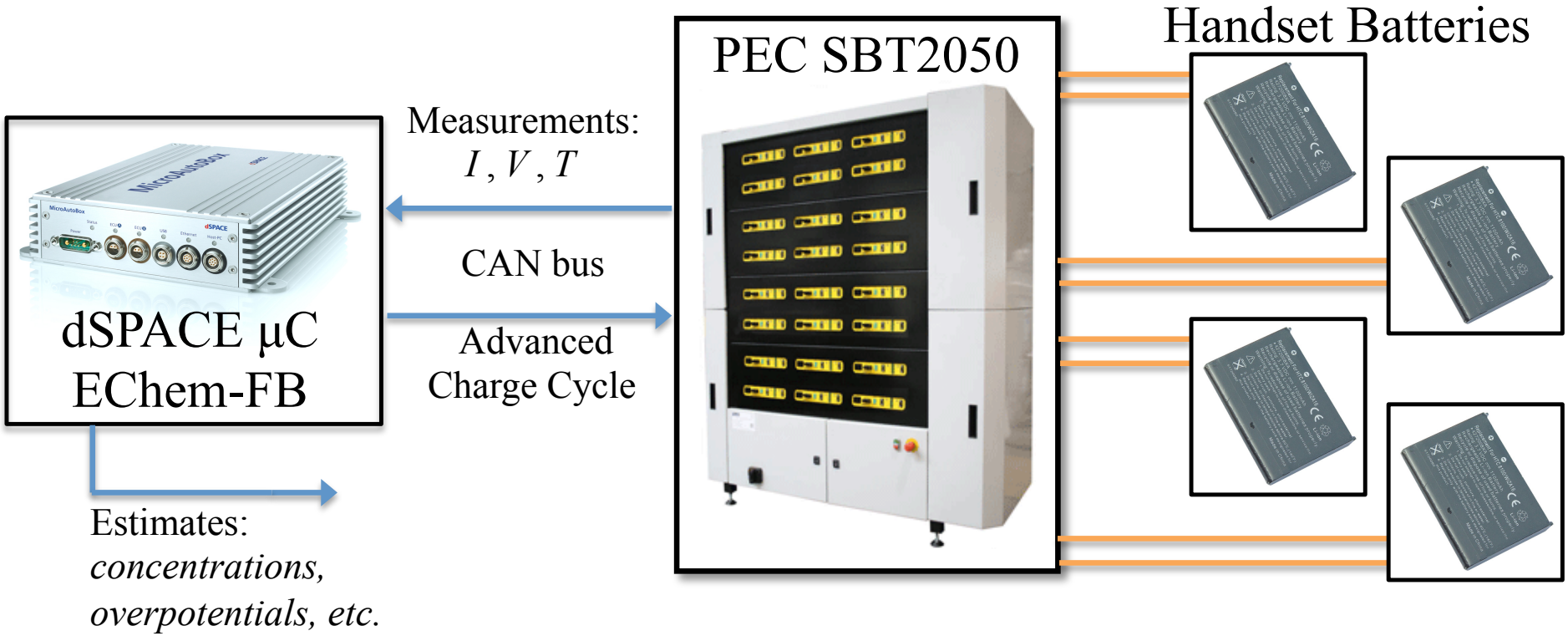
Outline

1 Electrochemistry-based Battery Controls

2 Demand Response of TCLs

3 Coming Soon...

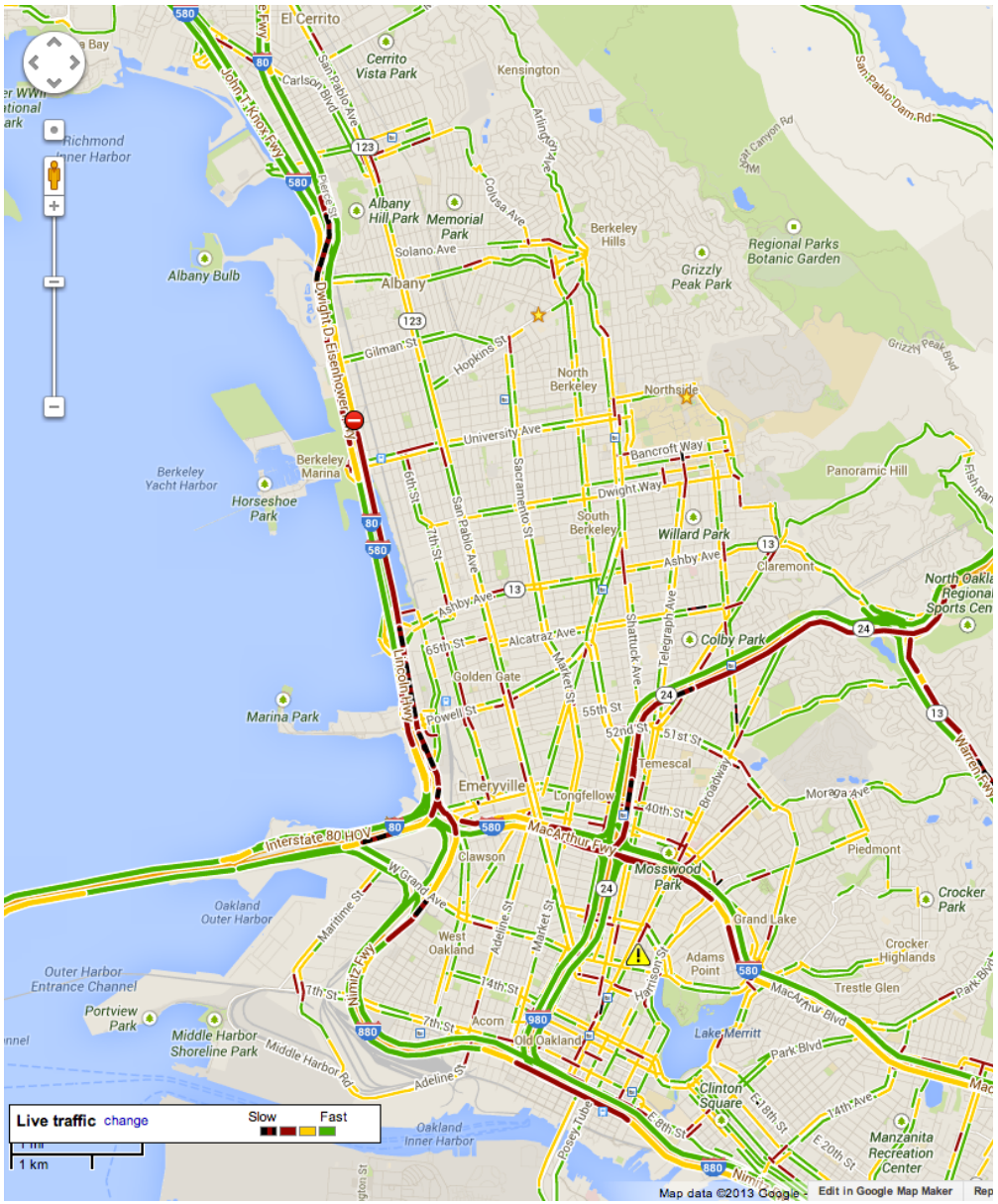
Fast Charging

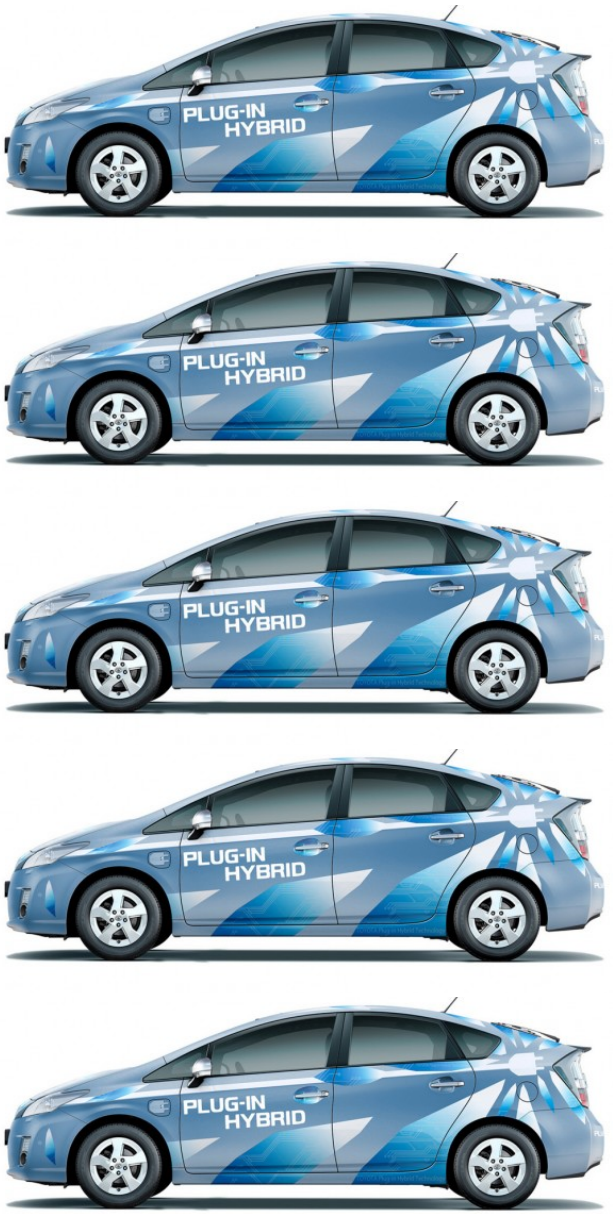


Motivation in Mobile Communication:

6.7B subscription accounts, 5.2B handsets in use,
1.7B sold worldwide in 2012

Optimize PHEV Energy Management w/ Real-time Traffic Data





CE 186

DESIGN OF CYBER-PHYSICAL SYSTEMS

Spring 2014: Mon & Wed 2-4



Topics Include:

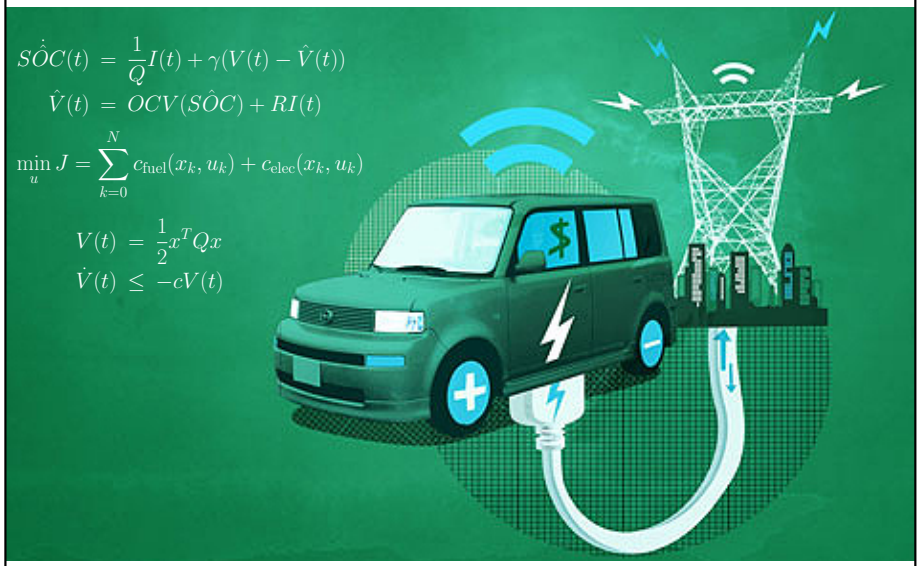
- Energy Management and Power Systems
- Vehicle-to-Grid and Battery Models
- Internet-based Systems
- Data Collection and Analysis

CE 290:002

ENERGY SYSTEMS & CONTROL

Spring 2014: MWF 10-11

Prof. Scott Moura



Topics Include:

- Energy Storage & Renewables
- Electrified Transportation
- State estimation
- Optimal control

Energy, Controls, and Applications Lab (eCAL)

http://faculty.ce.berkeley.edu/moura/

smoura@berkeley.edu