Adaptive Estimation of PDE Models for Battery Electrochemistry

Scott Moura[1] Nalin Chaturvedi[2] Miroslav Krstić[1]

[1]Cymer Center for Control Systems and Dynamics
UC San Diego

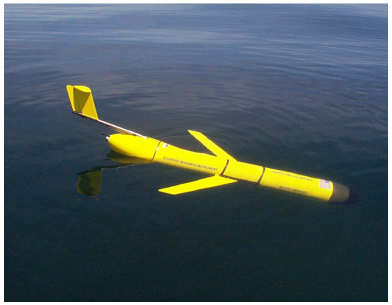
[2]Research and Technology Center
Robert Bosch LLC, Palo Alto, CA

Semi-Plenary Talk
ASME Dynamic Systems and Control Conference
October 18, 2012

A Golden Era


ST. JUDE MEDICAL
Sylmar, CA USA
ACCENT SR RF
PM1210 SSR
ST. JUDE MEDICAL
Sylmar, CA USA
ANTHEM RF
PM3212 DDDRV





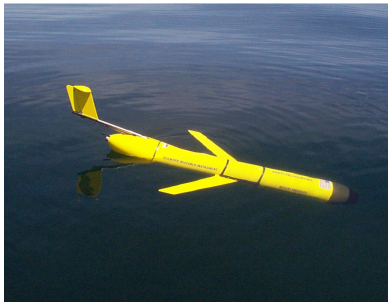




A Golden Era



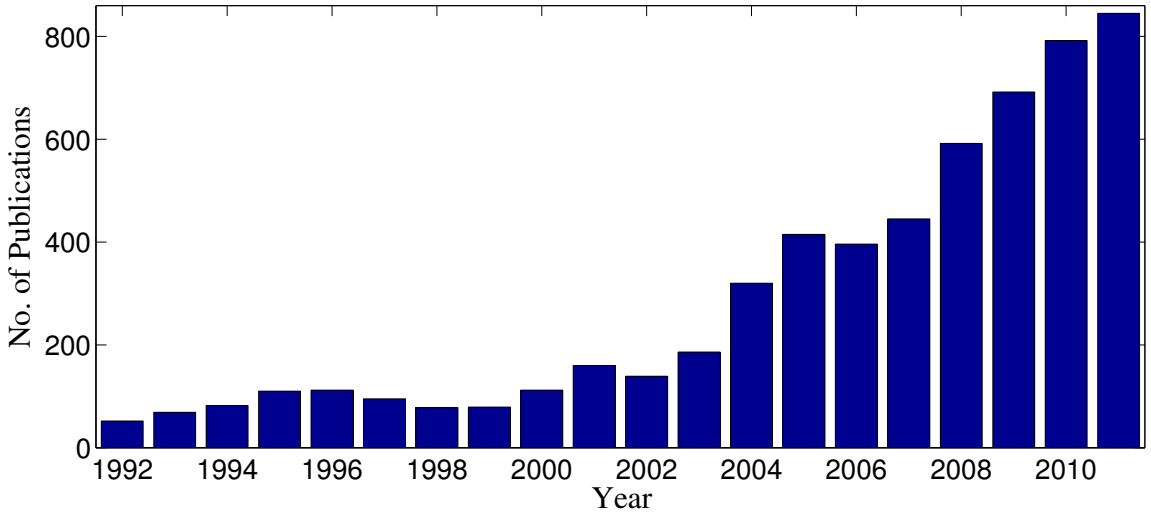








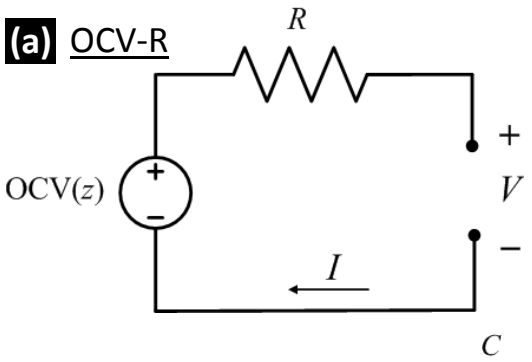
Keyword: “Battery Systems and Control”



Battery Models

Equivalent Circuit Model

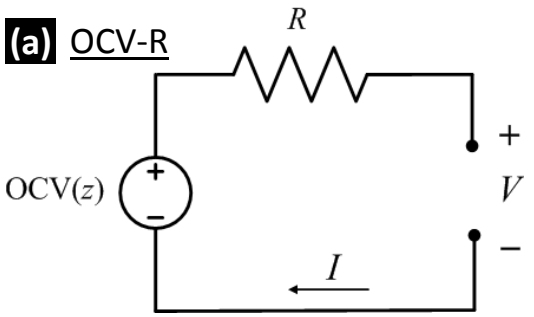
(a) OCV-R



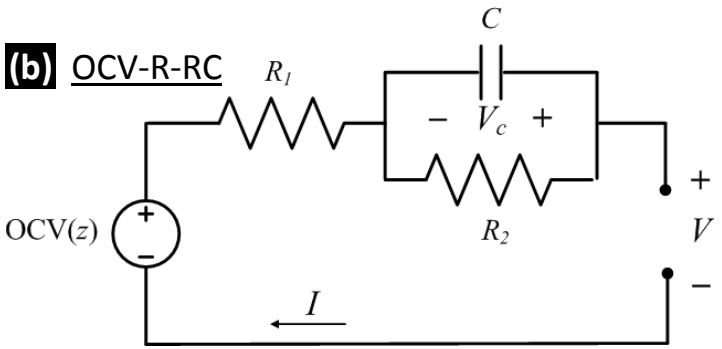
Battery Models

Equivalent Circuit Model

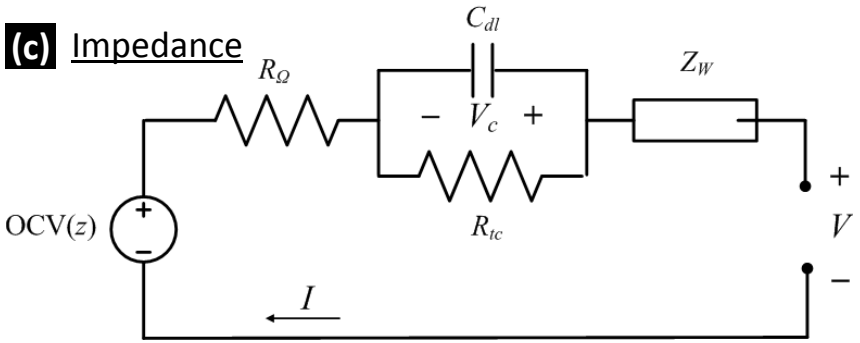
(a) OCV-R



(b) OCV-R-RC



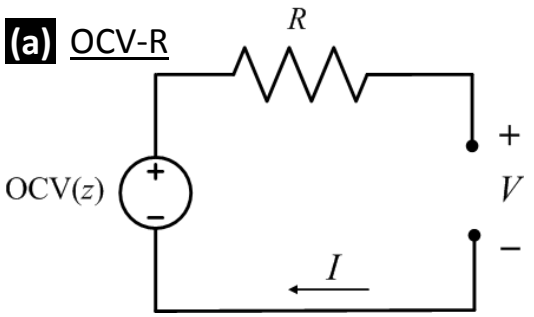
(c) Impedance



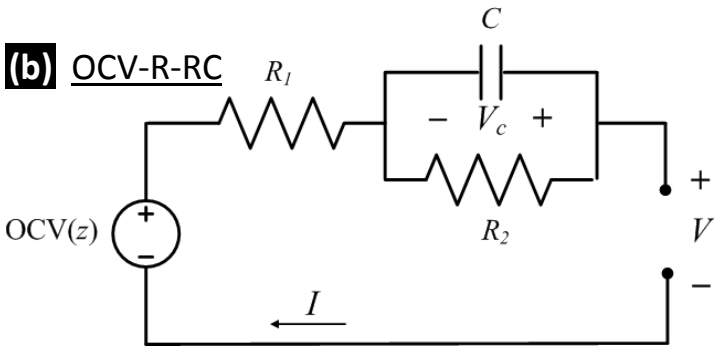
Battery Models

Equivalent Circuit Model

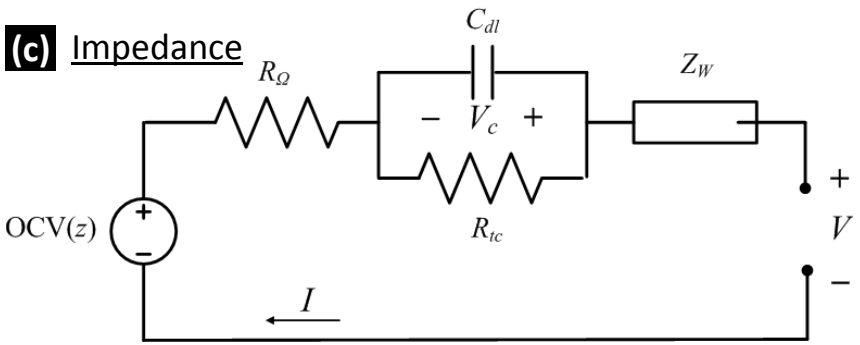
(a) OCV-R



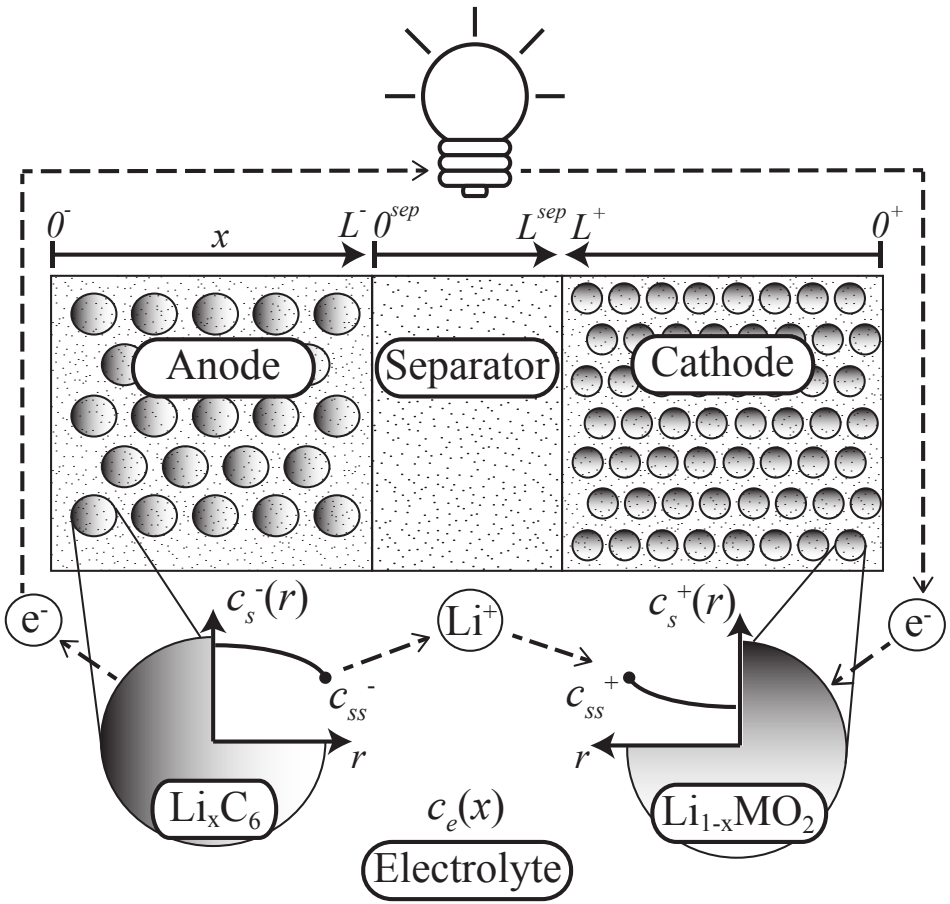
(b) OCV-R-RC



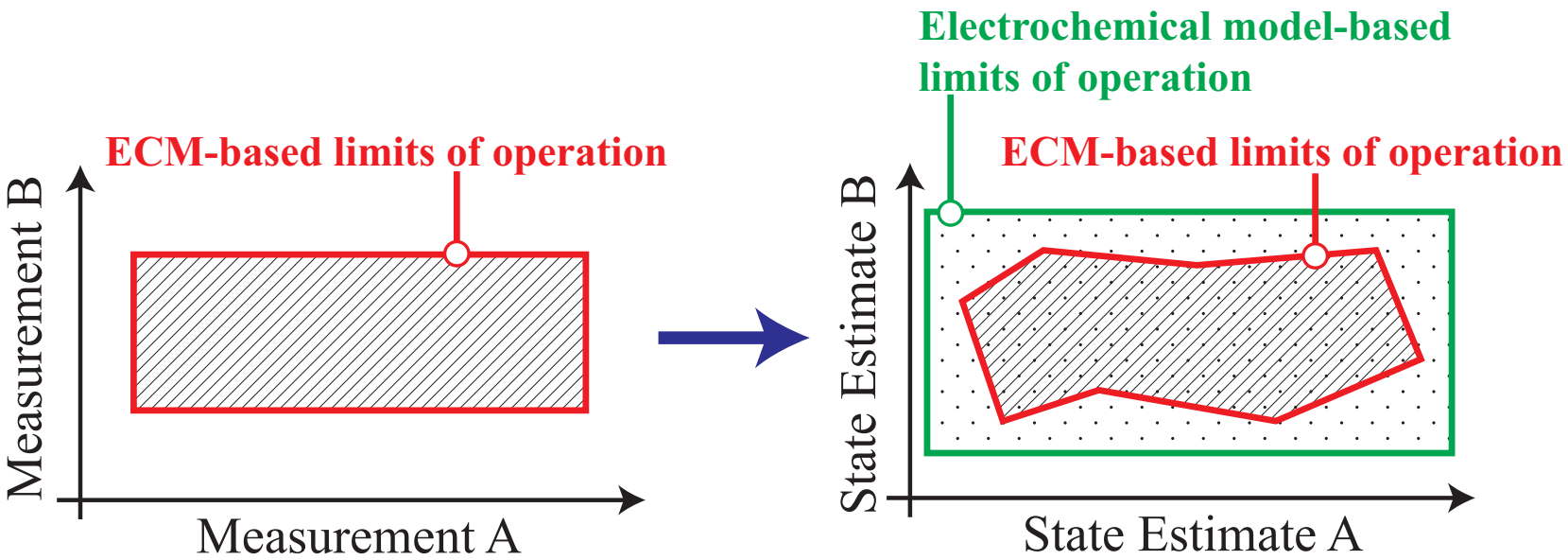
(c) Impedance



Electrochemical Model



Operate Batteries at their Physical Limits



Electrochemical Model Equations

well, some of them

Description	**Equation**
Solid phase Li concentration	$\frac{\partial c_s^{\pm}}{\partial t}(x,r,t) = \frac{1}{r^2}\frac{\partial}{\partial r}\left[D_s^{\pm} r^2 \frac{\partial c_s^{\pm}}{\partial r}(x,r,t)\right]$
Electrolyte Li concentration	$\varepsilon_e \frac{\partial c_e}{\partial t}(x,t) = \frac{\partial}{\partial x}\left[\varepsilon_e D_e \frac{\partial c_e}{\partial x}(x,t) + \frac{1-t_c^0}{F} i_e^{\pm}(x,t)\right]$
Solid potential	$\frac{\partial \phi_s^{\pm}}{\partial x}(x,t) = \frac{i_e^{\pm}(x,t) - I(t)}{\sigma^{\pm}}$
Electrolyte potential	$\frac{\partial \phi_e}{\partial x}(x,t) = -\frac{i_e^{\pm}(x,t)}{\kappa} + \frac{2RT}{F}(1-t_c^0)\left(1 + \frac{d\ln f_{c/a}}{d\ln c_e}(x,t)\right)\frac{\partial \ln c_e}{\partial x}(x,t)$
Electrolyte ionic current	$\frac{\partial i_e^{\pm}}{\partial x}(x,t) = a_s F j_n^{\pm}(x,t)$
Molar flux btw phases	$j_n^{\pm}(x,t) = \frac{1}{F} i_0^{\pm}(x,t)\left[e^{\frac{\alpha_a F}{RT}\eta^{\pm}(x,t)} - e^{-\frac{\alpha_c F}{RT}\eta^{\pm}(x,t)}\right]$
Temperature	$\rho c_P \frac{dT}{dt}(t) = h\left[T^0(t) - T(t)\right] + I(t)V(t) - \int_{0^-}^{0^+} a_s F j_n(x,t)\Delta T(x,t)dx$

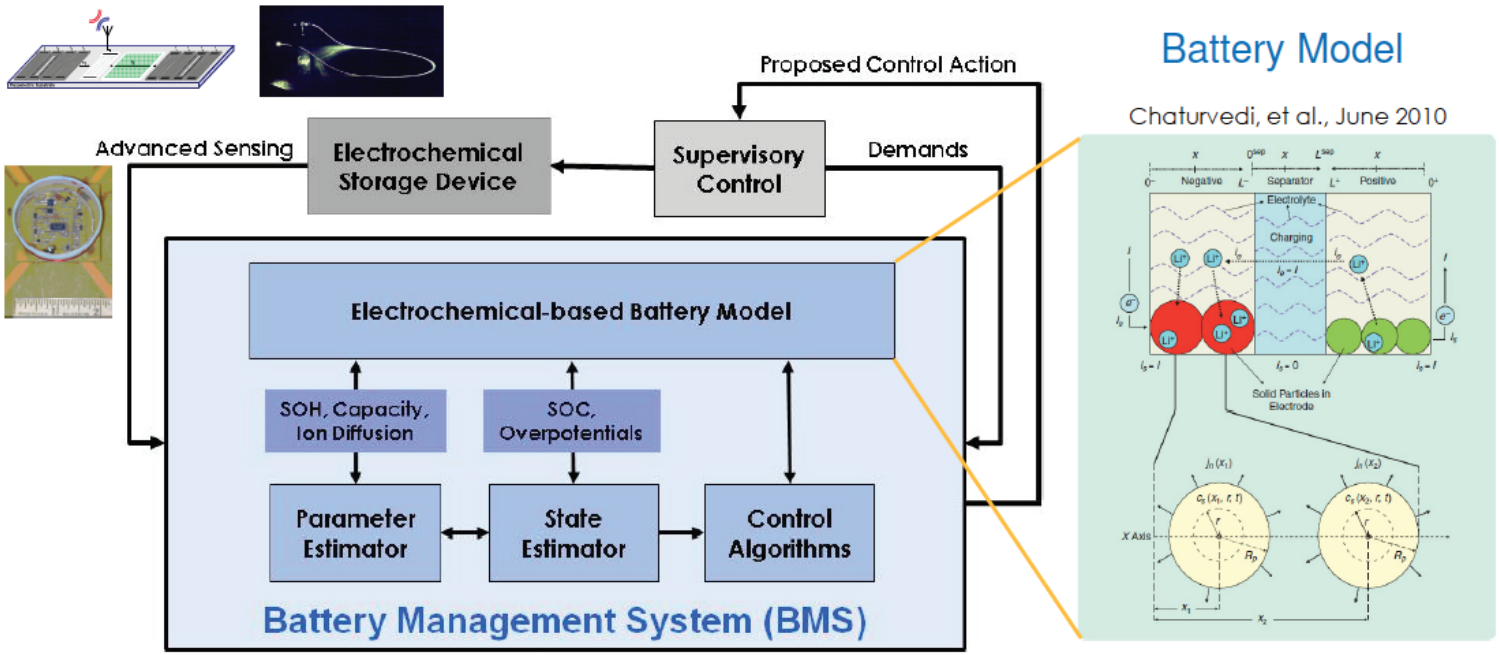
Animation of Li Ion Evolution

A Summarized History of SOC/SOH Estimation

- Equivalent Circuit Model
  - G. Plett (2004) - Extended Kalman Filter (States & Params)
  - RLS, Bias-correcting RLS, EKF on Impedance-based ECMs, LPV, Neural nets, Sliding-mode, Particle filters, and many more...

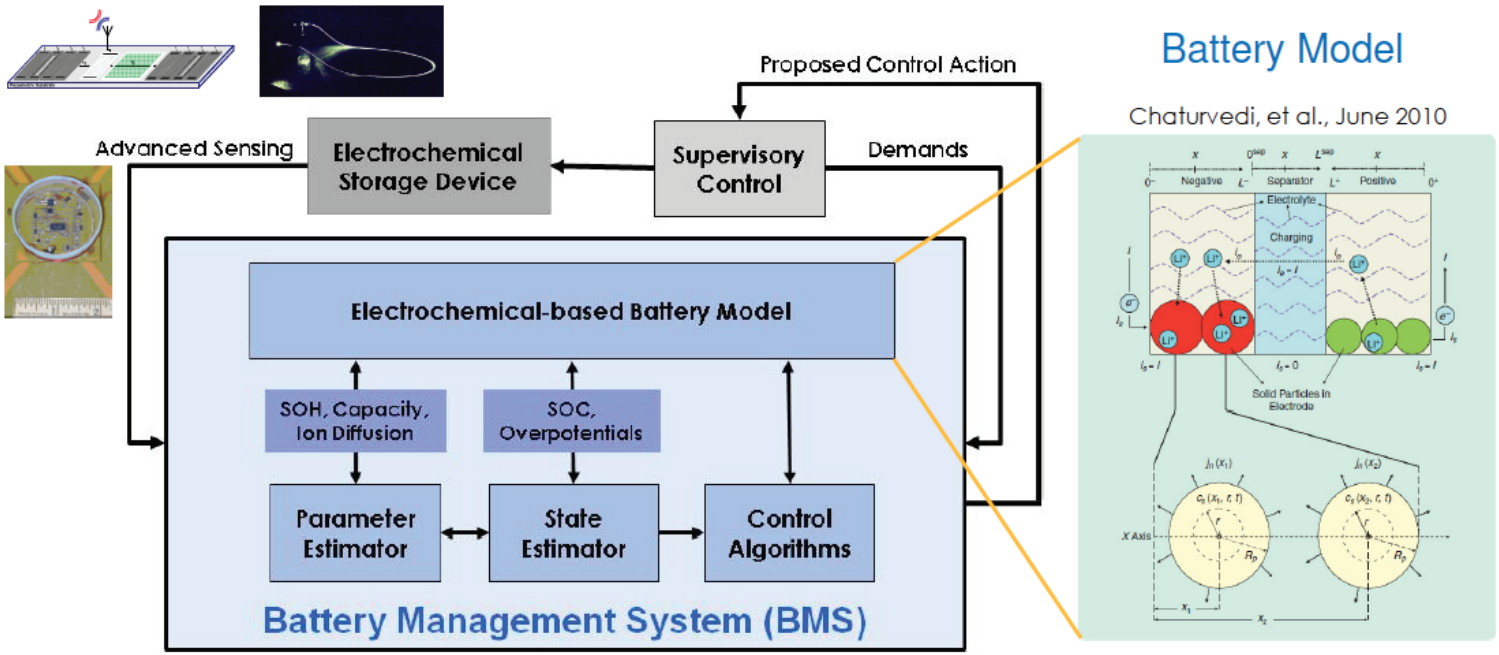
A Summarized History of SOC/SOH Estimation

- Equivalent Circuit Model
- Electrochemical Model



A Summarized History of SOC/SOH Estimation

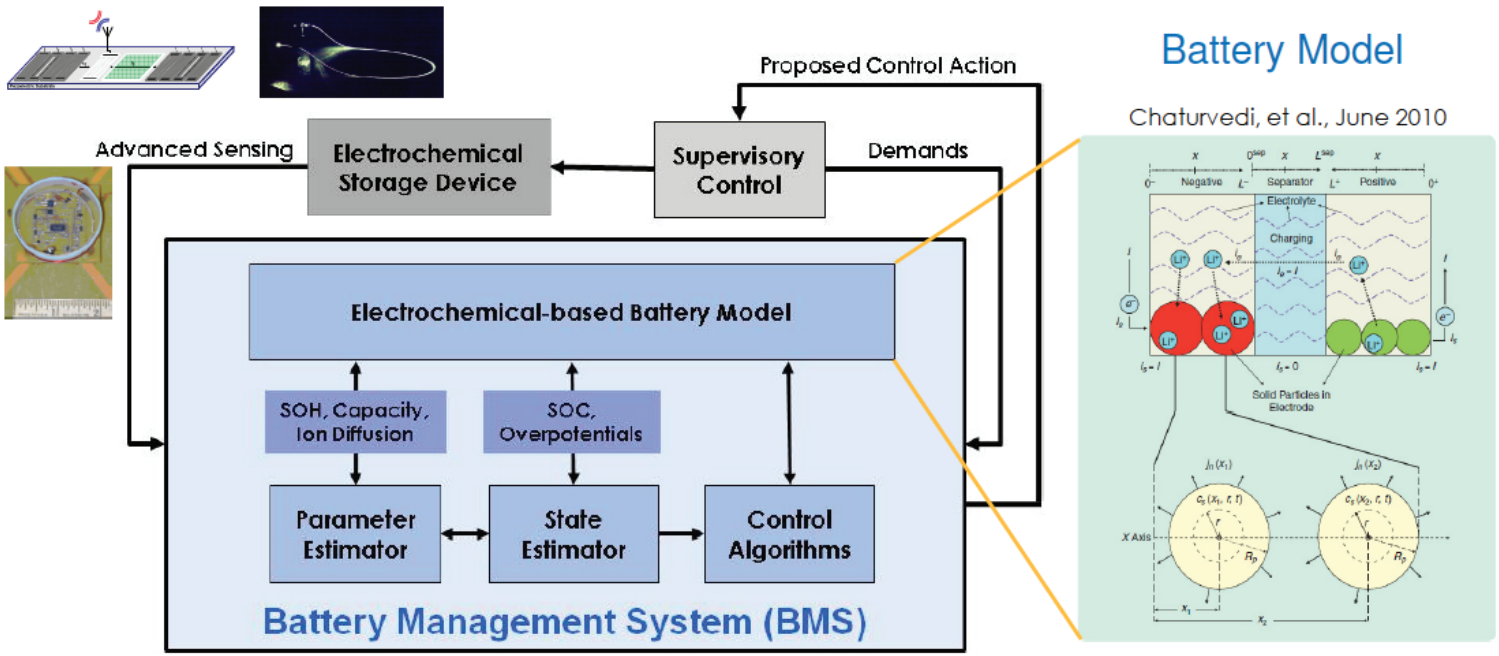
- Equivalent Circuit Model
- Electrochemical Model



- R. White (2006) - EKF on Single Particle Model (States)
- K. Smith (2008) - KF on Reduced Freq. Domain Model (States)
- A. Stefanopoulou (2010) - EKF on Electrode Avg Model (States)
- R. Klein (2012) - Luenburger Observer on reduced PDE Model (States)

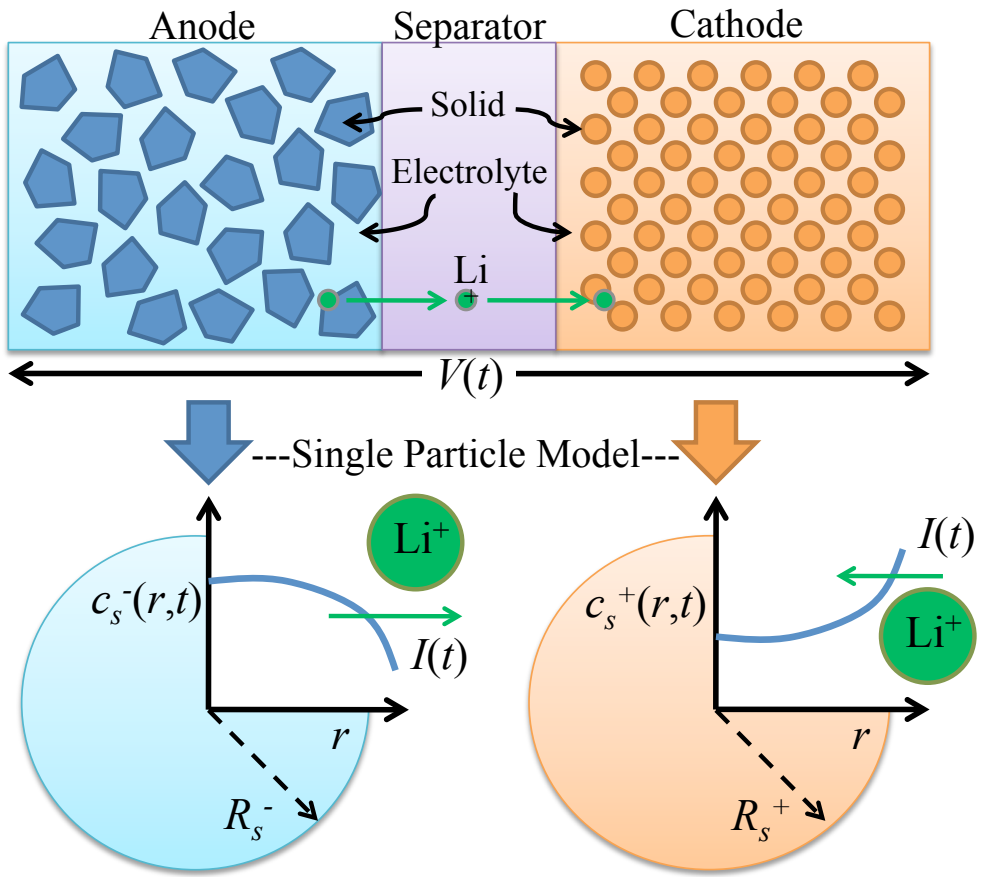
A Summarized History of SOC/SOH Estimation

- Equivalent Circuit Model
- Electrochemical Model



- R. White (2006) - EKF on Single Particle Model (States)
- K. Smith (2008) - KF on Reduced Freq. Domain Model (States)
- A. Stefanopoulou (2010) - EKF on Electrode Avg Model (States)
- R. Klein (2012) - Luenburger Observer on reduced PDE Model (States)
- S. Moura (2012) - Adaptive PDE Observer on SPM (States & Params)

Single Particle Model (SPM)

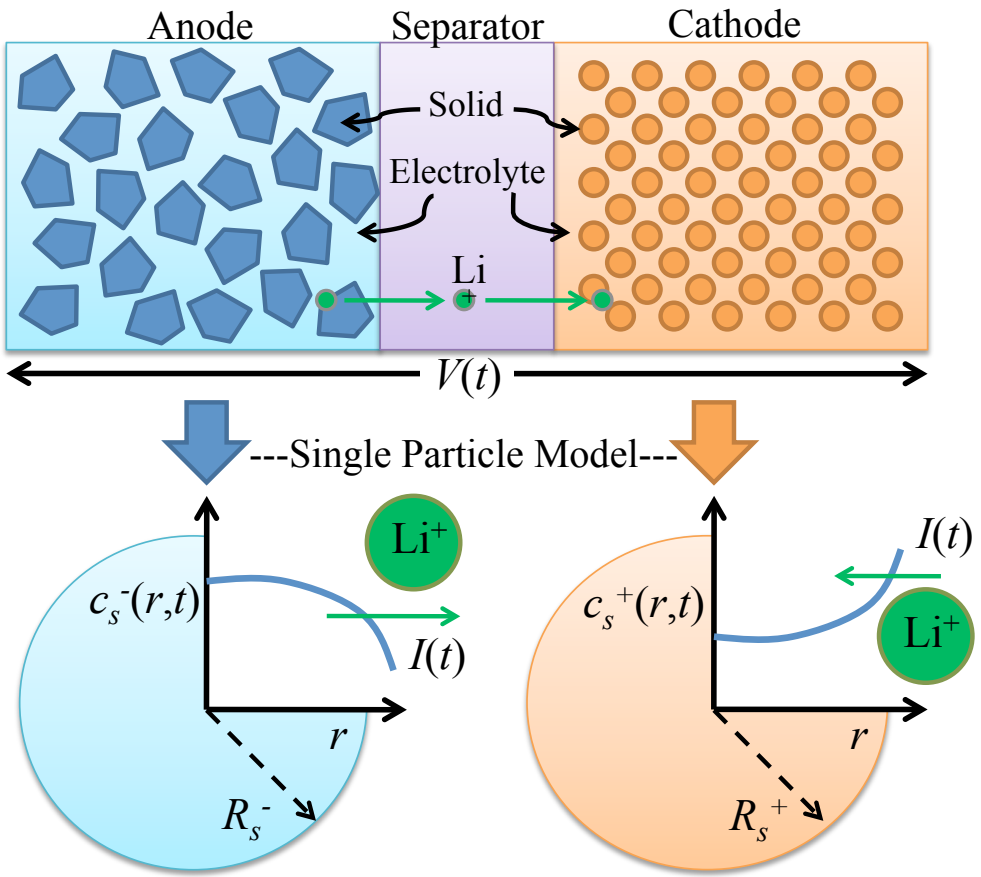


Single Particle Model (SPM)

Diffusion of Li in solid phase:

$$\frac{\partial c_s^-}{\partial t}(r,t) = \frac{D_s^-}{r^2}\frac{\partial}{\partial r}\left[r^2\frac{\partial^2 c_s^-}{\partial r^2}(r,t)\right]$$

$$\frac{\partial c_s^+}{\partial t}(r,t) = \frac{D_s^+}{r^2}\frac{\partial}{\partial r}\left[r^2\frac{\partial^2 c_s^+}{\partial r^2}(r,t)\right]$$



Single Particle Model (SPM)

Diffusion of Li in solid phase:

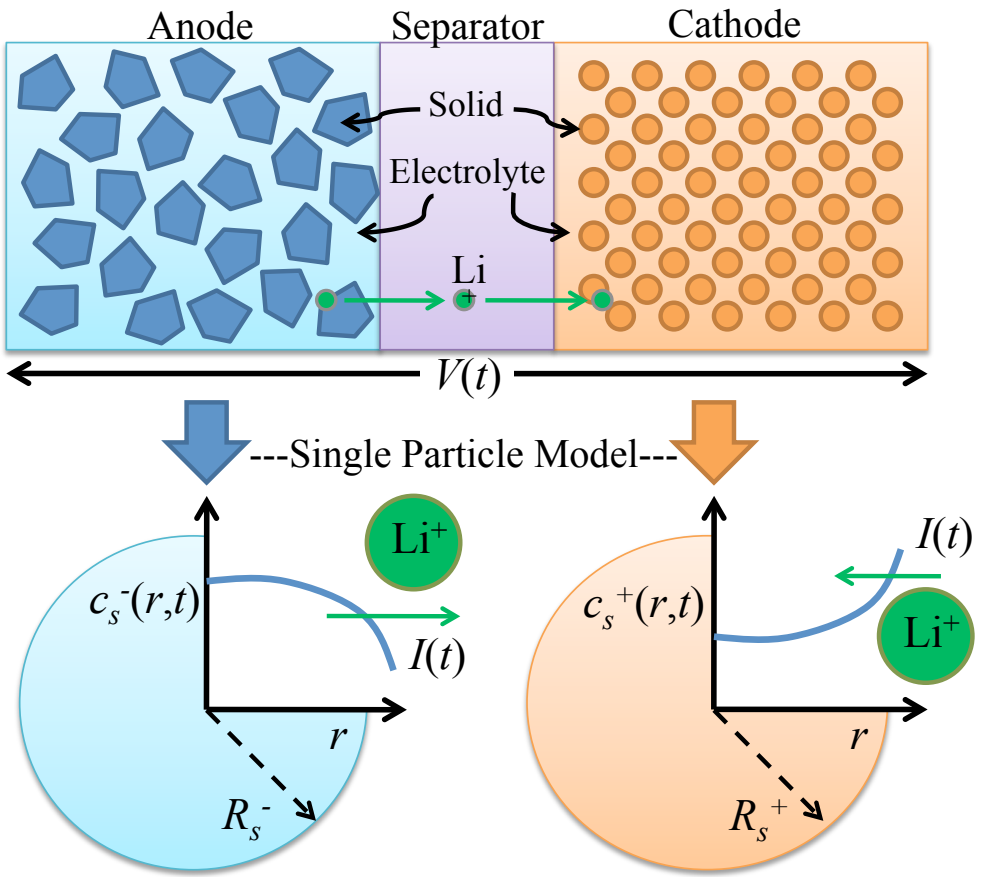
$$\frac{\partial c_s^-}{\partial t}(r,t) = \frac{D_s^-}{r^2}\frac{\partial}{\partial r}\left[r^2\frac{\partial^2 c_s^-}{\partial r^2}(r,t)\right]$$

$$\frac{\partial c_s^+}{\partial t}(r,t) = \frac{D_s^+}{r^2}\frac{\partial}{\partial r}\left[r^2\frac{\partial^2 c_s^+}{\partial r^2}(r,t)\right]$$

Boundary conditions:

$$\frac{\partial c_s^-}{\partial r}(R_s^-,t) = -\rho^+ I(t)$$

$$\frac{\partial c_s^+}{\partial r}(R_s^+,t) = \rho^- I(t)$$



Single Particle Model (SPM)

Diffusion of Li in solid phase:

$$\frac{\partial c_s^-}{\partial t}(r,t) = \frac{D_s^-}{r^2}\frac{\partial}{\partial r}\left[r^2\frac{\partial^2 c_s^-}{\partial r^2}(r,t)\right]$$

$$\frac{\partial c_s^+}{\partial t}(r,t) = \frac{D_s^+}{r^2}\frac{\partial}{\partial r}\left[r^2\frac{\partial^2 c_s^+}{\partial r^2}(r,t)\right]$$

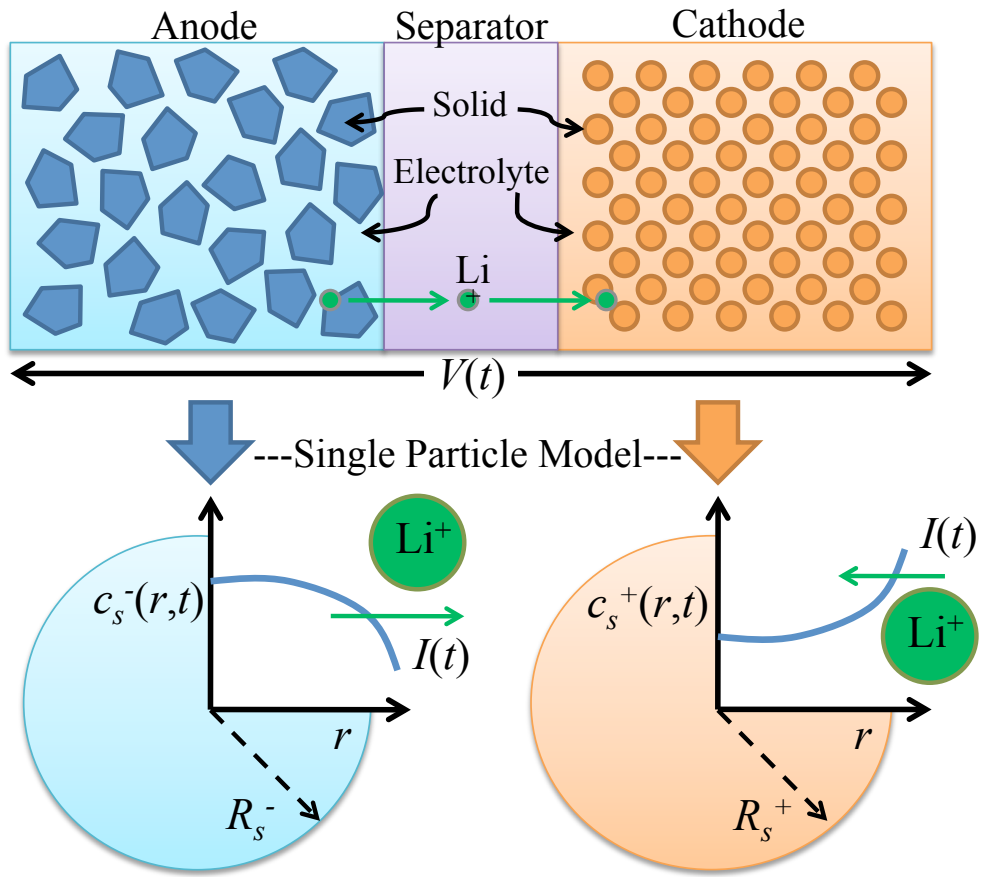
Boundary conditions:

$$\frac{\partial c_s^-}{\partial r}(R_s^-,t) = -\rho^+ I(t)$$

$$\frac{\partial c_s^+}{\partial r}(R_s^+,t) = \rho^- I(t)$$

Voltage Output Function:

$$V(t) = h(c_{ss}^-(t), c_{ss}^+(t), I(t); \theta)$$



Single Particle Model (SPM)

Diffusion of Li in solid phase:

$$\frac{\partial c_s^-}{\partial t}(r,t) = \frac{D_s^-}{r^2}\frac{\partial}{\partial r}\left[r^2\frac{\partial^2 c_s^-}{\partial r^2}(r,t)\right]$$

$$\frac{\partial c_s^+}{\partial t}(r,t) = \frac{D_s^+}{r^2}\frac{\partial}{\partial r}\left[r^2\frac{\partial^2 c_s^+}{\partial r^2}(r,t)\right]$$

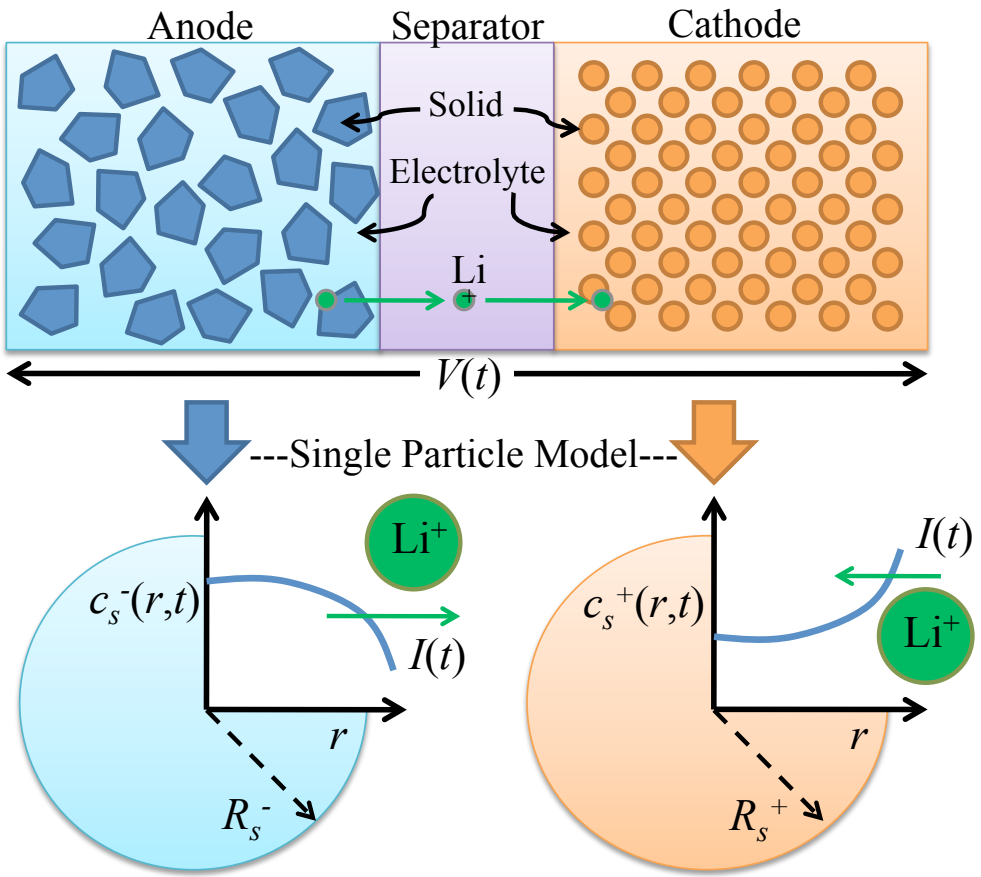
Boundary conditions:

$$\frac{\partial c_s^-}{\partial r}(R_s^-,t) = -\rho^+ I(t)$$

$$\frac{\partial c_s^+}{\partial r}(R_s^+,t) = \rho^- I(t)$$

Voltage Output Function:

$$V(t) = h(c_{ss}^-(t), c_{ss}^+(t), I(t); \theta)$$

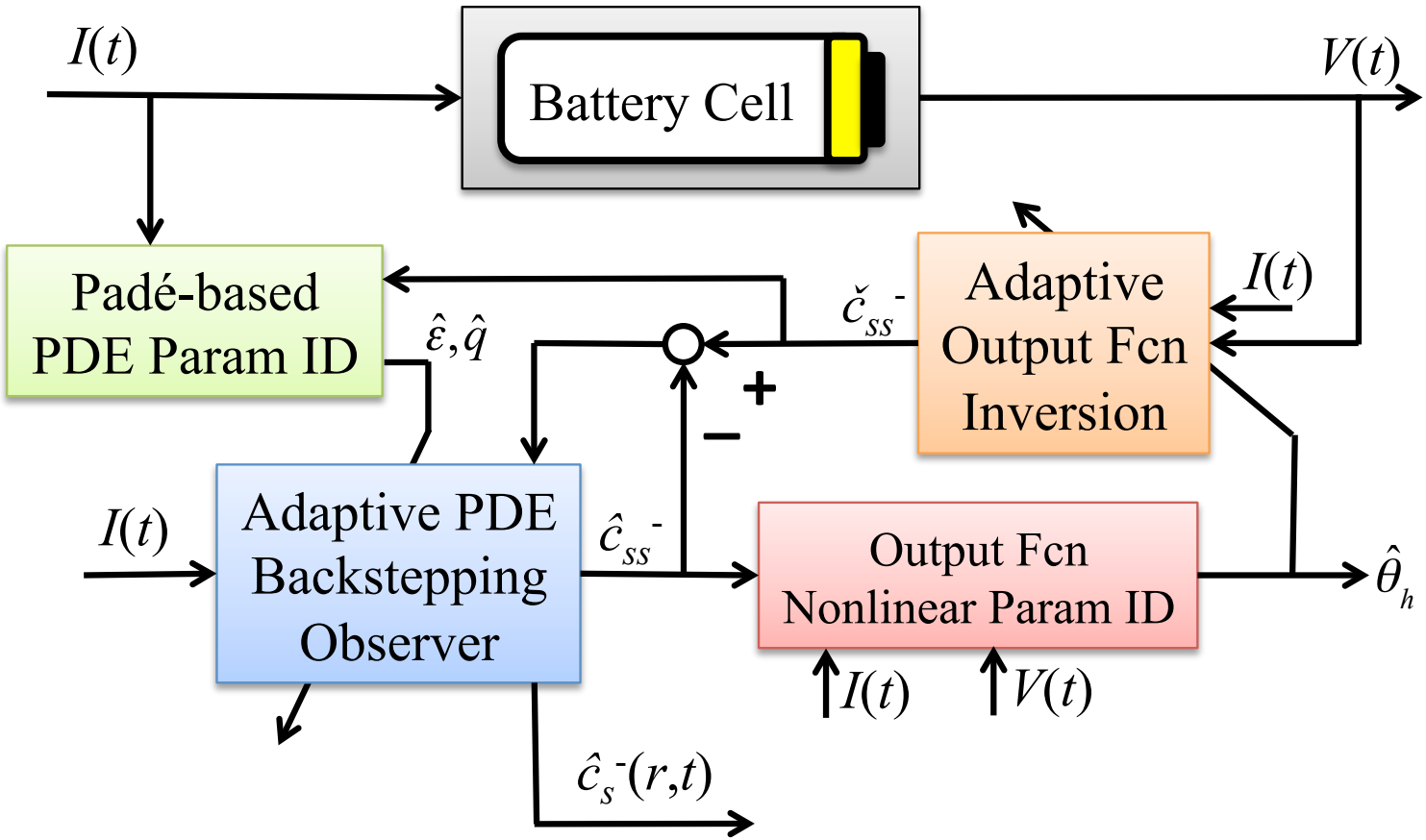


Definitions

- SOC: Bulk concentration SOC_{bulk}, Surface concentration $c_{ss}^-(t)$
- SOH: Physical parameters, e.g. ε, q, n_{Li}, R_f

Adaptive Observer

Combined State & Parameter Estimation



The SOC Estimation Problem

Problem Statement

Estimate states $c_s^-(r,t), c_s^+(r,t)$ from measurements $I(t), V(t)$ and SPM

The SOC Estimation Problem

Problem Statement

Estimate states $c_s^-(r,t), c_s^+(r,t)$ from measurements $I(t), V(t)$ and SPM

Simplify the Math

- Model reduction for observability
- Normalize time & space
- State transformation

Assumption: $c_{ss}^-(t)$ is measurable (to be relaxed later)

The SOC Estimation Problem

Problem Statement

Estimate states $c_s^-(r,t), c_s^+(r,t)$ from measurements $I(t), V(t)$ and SPM

Simplify the Math

- Model reduction for observability
- Normalize time & space
- State transformation

Assumption: $c_{ss}^-(t)$ is measurable (to be relaxed later)

Observer Model Equations

$$\frac{\partial c}{\partial t}(r,t) = \varepsilon \frac{\partial^2 c}{\partial r^2}(r,t) \qquad \text{Heat PDE}$$

$$c(0,t) = 0$$

$$\frac{\partial c}{\partial r}(1,t) - c(1,t) = -q\rho I(t)$$

$$\text{Measurement} = c(1,t) = c_{ss}^-(t)$$

Backstepping PDE Estimator

Estimator

$$
\begin{aligned}
\frac{\partial \hat{c}}{\partial t}(r,t) &= \varepsilon \frac{\partial^2 \hat{c}}{\partial r^2}(r,t) + p_1(r)\left[c(1,t) - \hat{c}(1,t)\right] \\
\hat{c}(0,t) &= 0 \\
\frac{\partial \hat{c}}{\partial r}(1,t) - \hat{c}(1,t) &= -q\rho I(t) + p_{10}\left[c(1,t) - \hat{c}(1,t)\right] \\
\tilde{c}(1,t) &= c(1,t) - \hat{c}(1,t)
\end{aligned}
$$

Backstepping PDE Estimator

Estimator

$$\begin{aligned}
\frac{\partial \hat{c}}{\partial t}(r,t) &= \varepsilon \frac{\partial^2 \hat{c}}{\partial r^2}(r,t) + p_1(r)\left[c(1,t) - \hat{c}(1,t)\right] \\
\hat{c}(0,t) &= 0 \\
\frac{\partial \hat{c}}{\partial r}(1,t) - \hat{c}(1,t) &= -q\rho I(t) + p_{10}\left[c(1,t) - \hat{c}(1,t)\right] \\
\tilde{c}(1,t) &= c(1,t) - \hat{c}(1,t)
\end{aligned}$$

Estimation Error Dynamics: $\tilde{c}(r,t) = c(r,t) - \hat{c}(r,t)$

$$\begin{aligned}
\frac{\partial \tilde{c}}{\partial t}(r,t) &= \varepsilon \frac{\partial^2 \tilde{c}}{\partial r^2}(r,t) - p_1(r)\tilde{c}(1,t) \\
\tilde{c}(0,t) &= 0 \\
\frac{\partial \tilde{c}}{\partial r}(1,t) - \tilde{c}(1,t) &= -p_{10}\tilde{c}(1,t)
\end{aligned}$$

Backstepping PDE Estimator

Estimator

$$\begin{aligned}
\frac{\partial \hat{c}}{\partial t}(r,t) &= \varepsilon \frac{\partial^2 \hat{c}}{\partial r^2}(r,t) + p_1(r)\left[c(1,t) - \hat{c}(1,t)\right] \\
\hat{c}(0,t) &= 0 \\
\frac{\partial \hat{c}}{\partial r}(1,t) - \hat{c}(1,t) &= -q\rho I(t) + p_{10}\left[c(1,t) - \hat{c}(1,t)\right] \\
\tilde{c}(1,t) &= c(1,t) - \hat{c}(1,t)
\end{aligned}$$

The Concept

$$\tilde{c}(r,t) = \tilde{w}(r,t) - \int_r^1 p(r,s)\tilde{w}(s)ds$$

Backstepping Transformation

$$\frac{\partial \tilde{w}}{\partial t}(r,t) = \varepsilon \frac{\partial^2 \tilde{w}}{\partial r^2}(r,t) + \lambda \tilde{w}(r,t)$$

$$\tilde{w}(0,t) = 0$$

Exp. Stable Target System

$$\frac{\partial \tilde{w}}{\partial r}(1,t) = \frac{1}{2}\tilde{w}(1,t)$$

$$W = \frac{1}{2}\int_0^1 \tilde{w}^2(x,t)dx$$

Backstepping PDE Estimator

Estimator

$$\begin{aligned}
\frac{\partial \hat{c}}{\partial t}(r,t) &= \varepsilon \frac{\partial^2 \hat{c}}{\partial r^2}(r,t) + p_1(r)\left[c(1,t) - \hat{c}(1,t)\right] \\
\hat{c}(0,t) &= 0 \\
\frac{\partial \hat{c}}{\partial r}(1,t) - \hat{c}(1,t) &= -q\rho I(t) + p_{10}\left[c(1,t) - \hat{c}(1,t)\right] \\
\tilde{c}(1,t) &= c(1,t) - \hat{c}(1,t)
\end{aligned}$$

Kernel PDE

$$p(r,s) : \mathcal{D} \to \mathbb{R}, \qquad \mathcal{D} = \{(r,s) | 0 \le r \le s \le 1\}$$

$$p_{rr}(r,s) - p_{ss}(r,s) = \frac{\lambda}{\varepsilon} p(r,s) \qquad p_1(r) = -p_s(r,1) - \frac{1}{2} p(r,1)$$

$$p(0,s) = 0 \qquad p_{10} = \frac{3 - \lambda/\varepsilon}{2}$$

$$p(r,r) = \frac{\lambda}{2\varepsilon} r$$

Backstepping PDE Estimator

Estimator

$$\begin{aligned}
\frac{\partial \hat{c}}{\partial t}(r,t) &= \varepsilon \frac{\partial^2 \hat{c}}{\partial r^2}(r,t) + p_1(r)\left[c(1,t) - \hat{c}(1,t)\right] \\
\hat{c}(0,t) &= 0 \\
\frac{\partial \hat{c}}{\partial r}(1,t) - \hat{c}(1,t) &= -q\rho I(t) + p_{10}\left[c(1,t) - \hat{c}(1,t)\right] \\
\tilde{c}(1,t) &= c(1,t) - \hat{c}(1,t)
\end{aligned}$$

Explicit Solution to Estimator Gains

$$p_1(r) = \frac{-\lambda r}{2\varepsilon z}\left[I_1(z) - \frac{2\lambda}{\varepsilon z} I_2(z)\right] \qquad \text{where} \quad z = \sqrt{\frac{\lambda}{\varepsilon}(r^2 - 1)}$$

$$p_{10} = \frac{1}{2}\left(3 - \frac{\lambda}{\varepsilon}\right)$$

The SOH Estimation Problem

Problem Statement

Estimate physical parameters from measurements $I(t), V(t)$ and SPM

The SOH Estimation Problem

Problem Statement

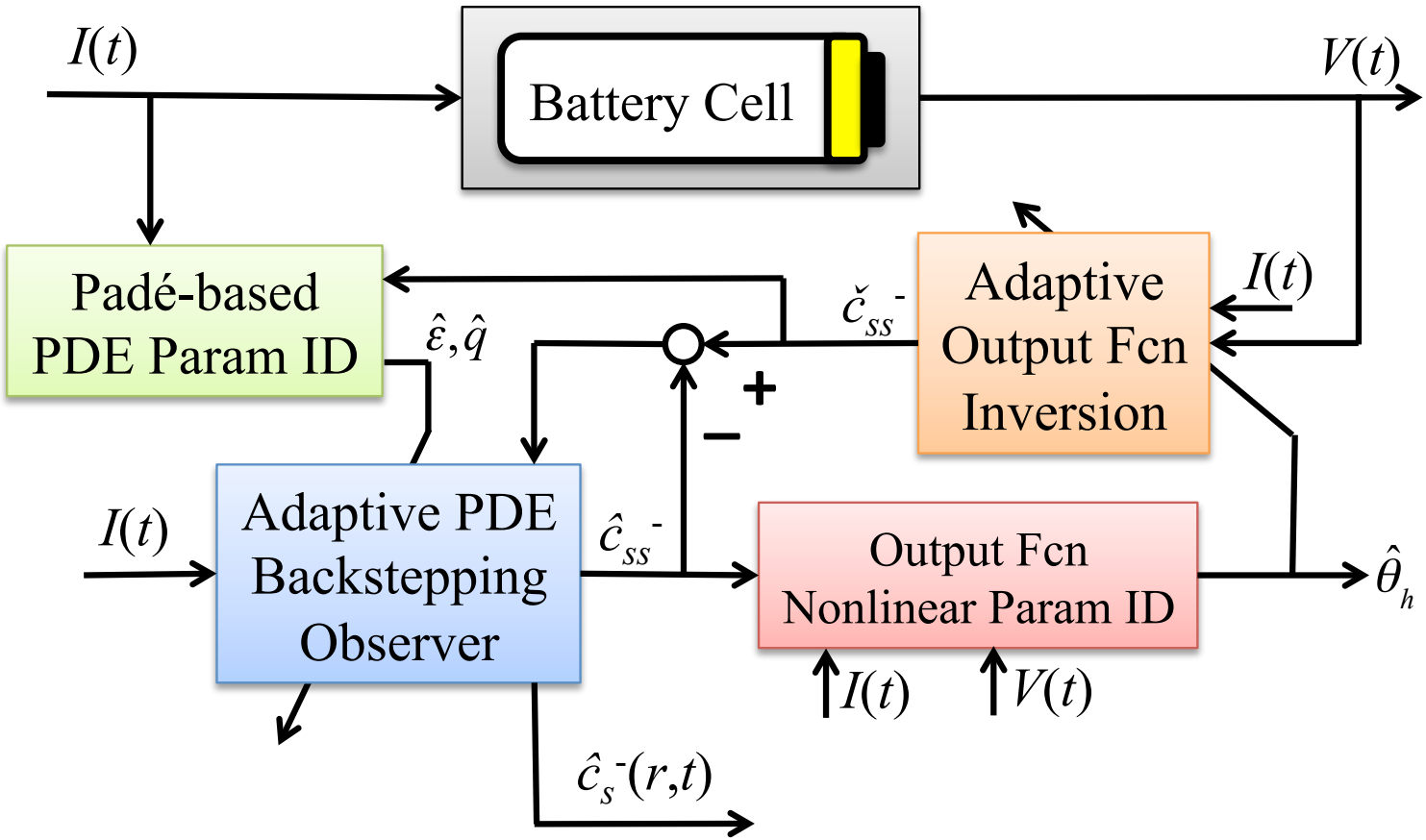
Estimate physical parameters from measurements $I(t), V(t)$ and SPM

Relate uncertain parameters to SOH-related concepts

- Capacity fade
- Power fade

Adaptive Observer

Combined State & Parameter Estimation



Padé-based PDE Parameter Identification

PDE Model

$$\frac{\partial c}{\partial t}(r,t) = \varepsilon \frac{\partial^2 c}{\partial r^2}(r,t)$$

$$c(0,t) = 0$$

$$\frac{\partial c}{\partial r}(1,t) - c(1,t) = -q\rho I(t)$$

Padé-based PDE Parameter Identification

PDE Model

$$\frac{\partial c}{\partial t}(r,t) = \varepsilon \frac{\partial^2 c}{\partial r^2}(r,t)$$

$$c(0,t) = 0$$

$$\frac{\partial c}{\partial r}(1,t) - c(1,t) = -q\rho I(t)$$

Challenge:

- ε multiplies unmeasurable states

Padé-based PDE Parameter Identification

PDE Model

$$\frac{\partial c}{\partial t}(r,t) = \varepsilon \frac{\partial^2 c}{\partial r^2}(r,t)$$
$$c(0,t) = 0$$
$$\frac{\partial c}{\partial r}(1,t) - c(1,t) = -q\rho I(t)$$

Challenge:

- ε multiplies unmeasurable states

Main Idea:

- Padé approx. of TF

$$\frac{c_{ss}(s)}{I(s)} = \frac{-q\rho \sinh\left(\sqrt{\frac{s}{\varepsilon}}\right)}{\left(\sqrt{\frac{s}{\varepsilon}}\right)\cosh\left(\sqrt{\frac{s}{\varepsilon}}\right) - \sinh\left(\sqrt{\frac{s}{\varepsilon}}\right)} \approx \frac{-3\rho q\varepsilon^2 - \frac{2}{7}\rho q\varepsilon s}{\varepsilon s + \frac{1}{35}s^2}$$

Padé-based PDE Parameter Identification

PDE Model

$$\frac{\partial c}{\partial t}(r,t) = \varepsilon \frac{\partial^2 c}{\partial r^2}(r,t)$$
$$c(0,t) = 0$$
$$\frac{\partial c}{\partial r}(1,t) - c(1,t) = -q\rho I(t)$$

Challenge:

- ε multiplies unmeasurable states

Main Idea:

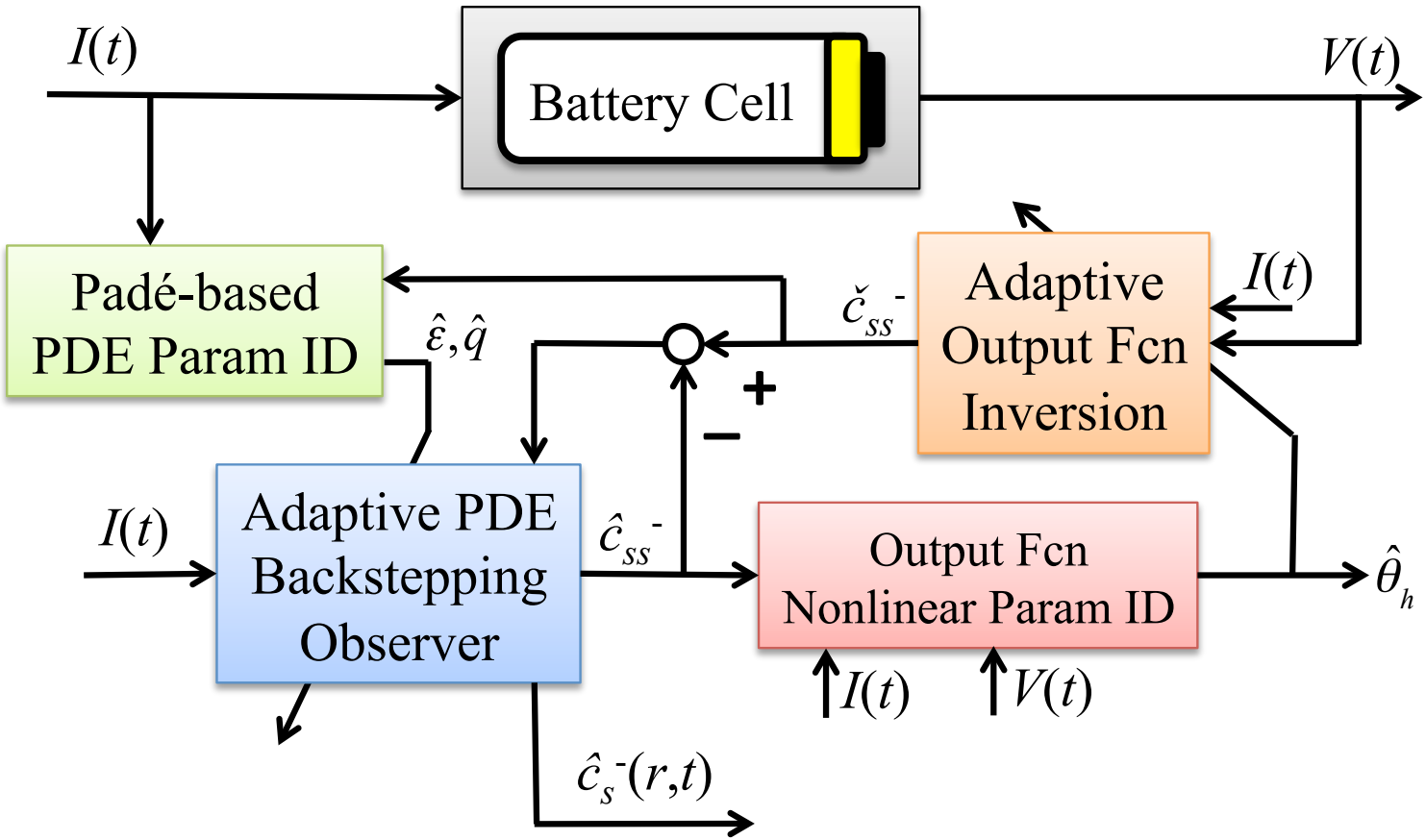
- Padé approx. of TF

$$\frac{c_{ss}(s)}{I(s)} = \frac{-q\rho \sinh\left(\sqrt{\frac{s}{\varepsilon}}\right)}{\left(\sqrt{\frac{s}{\varepsilon}}\right)\cosh\left(\sqrt{\frac{s}{\varepsilon}}\right) - \sinh\left(\sqrt{\frac{s}{\varepsilon}}\right)} \approx \frac{-3\rho q\varepsilon^2 - \frac{2}{7}\rho q\varepsilon s}{\varepsilon s + \frac{1}{35}s^2}$$

Apply recursive least squares to $\theta_{pde} = [\varepsilon, q\varepsilon, q\varepsilon^2]^T$

Adaptive Observer

Combined State & Parameter Estimation



Output Function Nonlinear Parameter ID

Nonlinearly Parameterized Output

$$V(t) = h(c_{ss}^{-}(t), I(t); \theta)$$

- θ contains many parameters
- Linear dependence between parameters?

Output Function Nonlinear Parameter ID

Nonlinearly Parameterized Output

$$V(t) = h(c_{ss}^{-}(t), I(t); \theta)$$

- θ contains many parameters
- Linear dependence between parameters?

Identifiability Analysis Result

- Linearly independent parameter subset : $\theta_h = [n_{Li}, R_f]^T$
  - n_{Li} : Total amount of cyclable Li (Capacity Fade)
  - R_f : Resistance of current collectors, electrolyte, SEI layer (Power Fade)

Output Function Nonlinear Parameter ID

Nonlinearly Parameterized Output

$$V(t) = h(c_{ss}^{-}(t), I(t); \theta)$$

- θ contains many parameters
- Linear dependence between parameters?

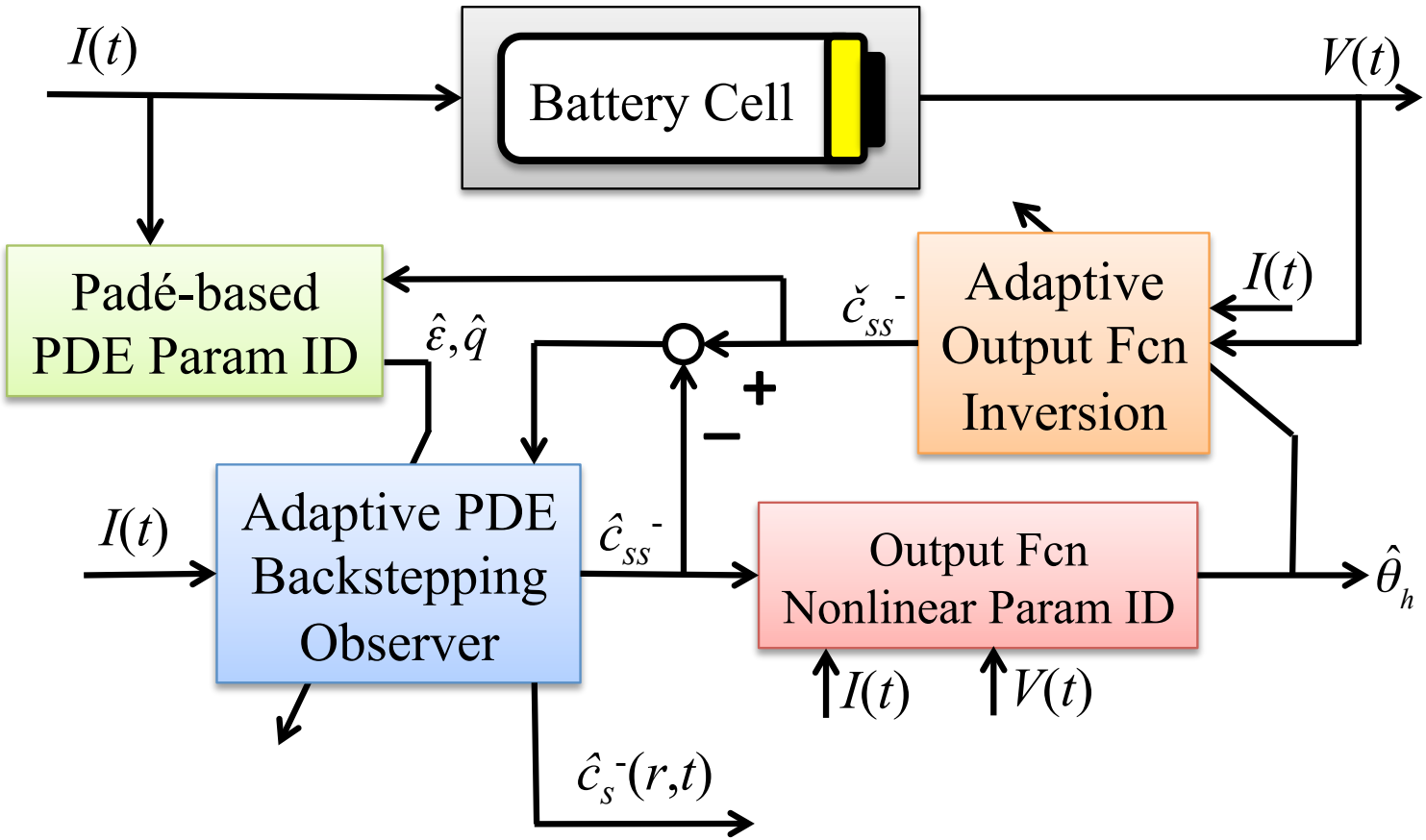
Identifiability Analysis Result

- Linearly independent parameter subset : $\theta_h = [n_{Li}, R_f]^T$
  - n_{Li} : Total amount of cyclable Li (Capacity Fade)
  - R_f : Resistance of current collectors, electrolyte, SEI layer (Power Fade)

Apply nonlinear recursive least squares to θ_h

Adaptive Observer

Combined State & Parameter Estimation



Adaptive Output Function Inversion

Require $c_{ss}^{-}(t)$ for output error injection

Adaptive Output Function Inversion

Require $c_{ss}^{-}(t)$ for output error injection

Nonlinear Function Inversion

Solve $g(c_{ss}^{-}, t) = 0$ for c_{ss}^{-}, where

$$g(c_{ss}^{-}, t) = h(c_{ss}^{-}(t), I(t); \hat{\theta}_h) - V(t)$$

Adaptive Output Function Inversion

Require $c_{ss}^{-}(t)$ for output error injection

Nonlinear Function Inversion

Solve $g(c_{ss}^{-}, t) = 0$ for c_{ss}^{-}, where

$$g(c_{ss}^{-}, t) = h(c_{ss}^{-}(t), I(t); \hat{\theta}_h) - V(t)$$

Newton's Method

Main Idea: Construct ODE with exp. stable equilibrium $g(c_{ss}^{-}, t) = 0$

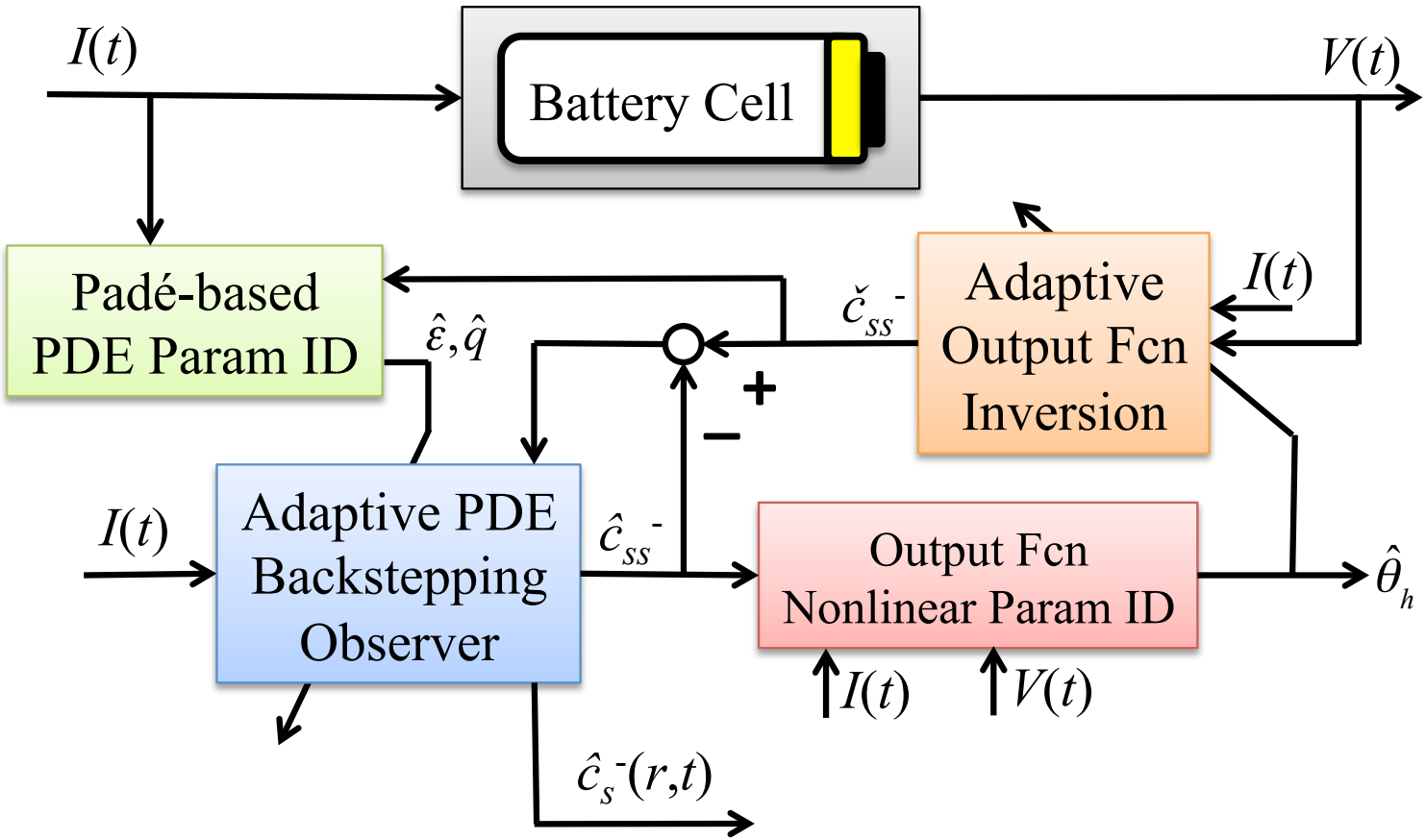
$$\frac{d}{dt}\left[g(\check{c}_{ss}^{-}, t)\right] = -\gamma g(\check{c}_{ss}^{-}, t)$$

expands to a Newton's method update law:

$$\frac{d}{dt}\check{c}_{ss}^{-} = -\frac{\gamma g(\check{c}_{ss}^{-}, t) + \frac{\partial g}{\partial t}(\check{c}_{ss}^{-}, t)}{\frac{\partial g}{\partial c_{ss}^{-}}(\check{c}_{ss}^{-}, t)}$$

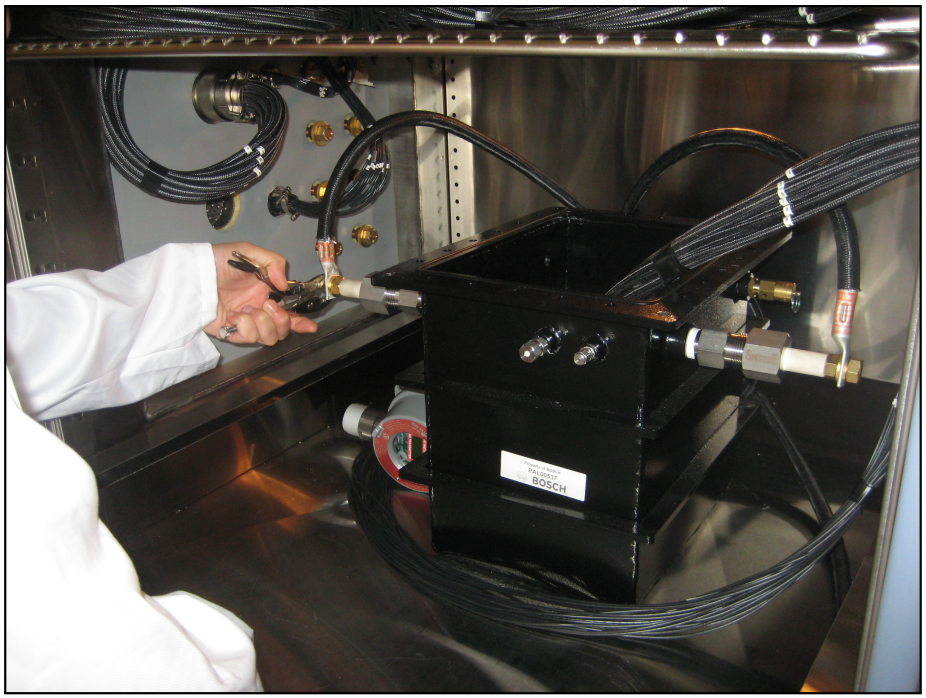
Adaptive Observer

Combined State & Parameter Estimation



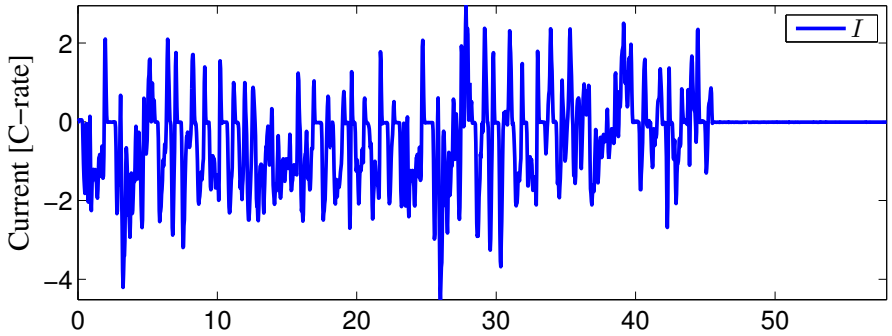
Experimental Testing at Bosch RTC





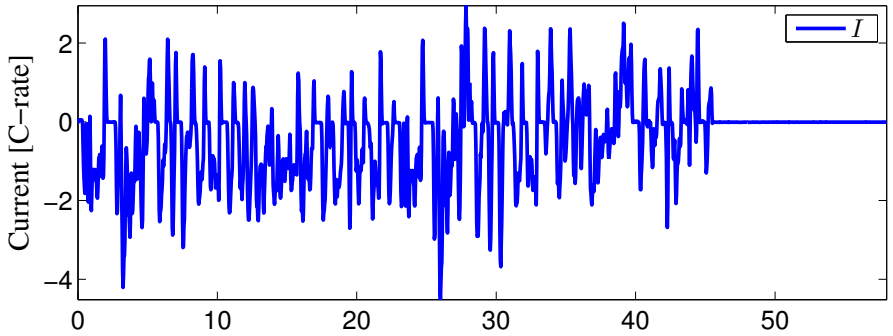
Results

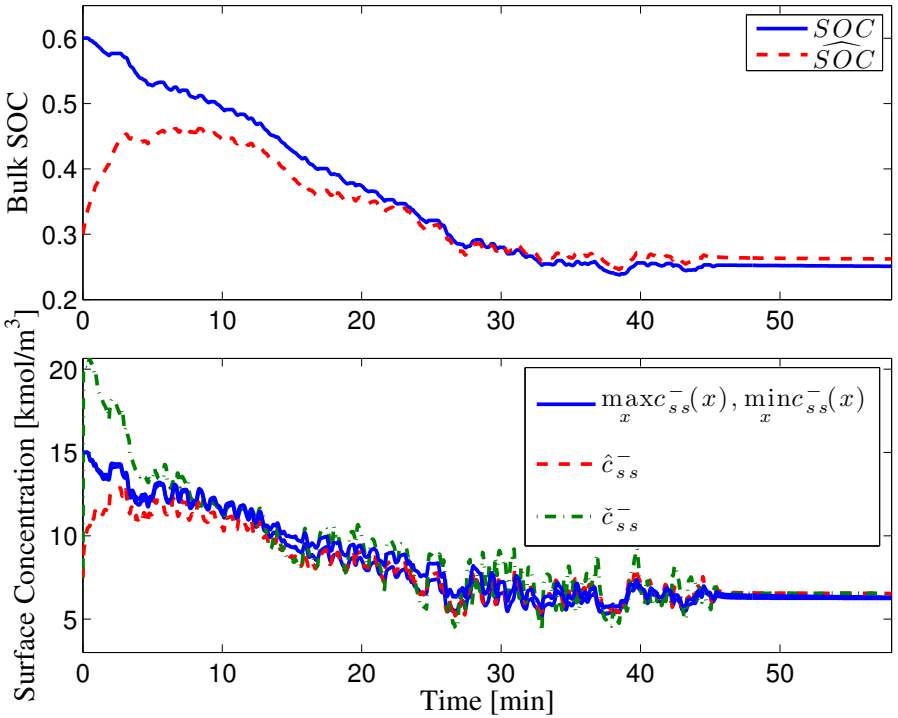
UDDS Drive Cycle Input



Results

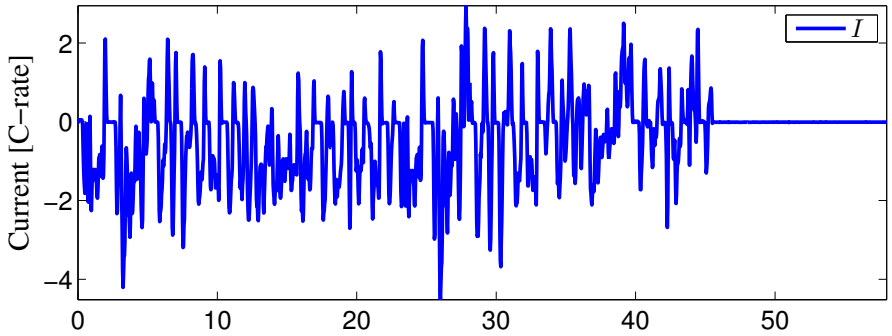
UDDS Drive Cycle Input

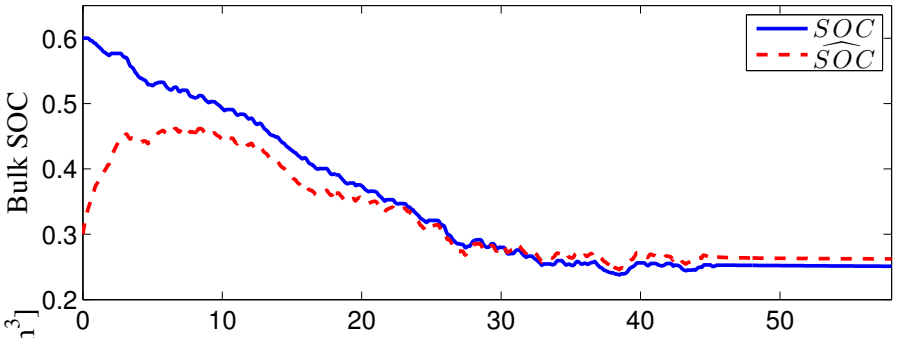


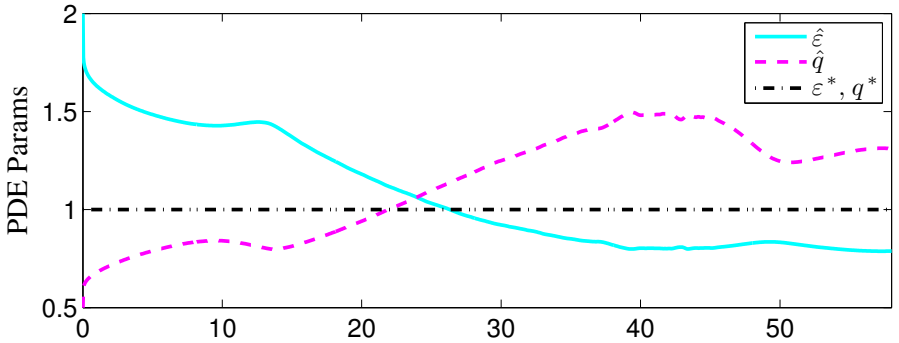


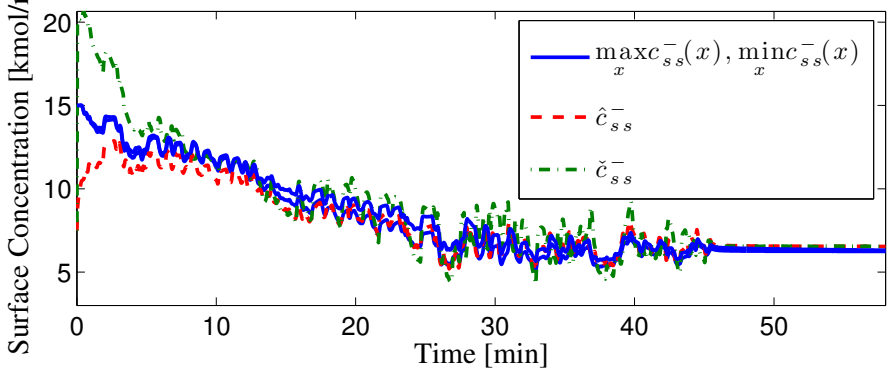
Results

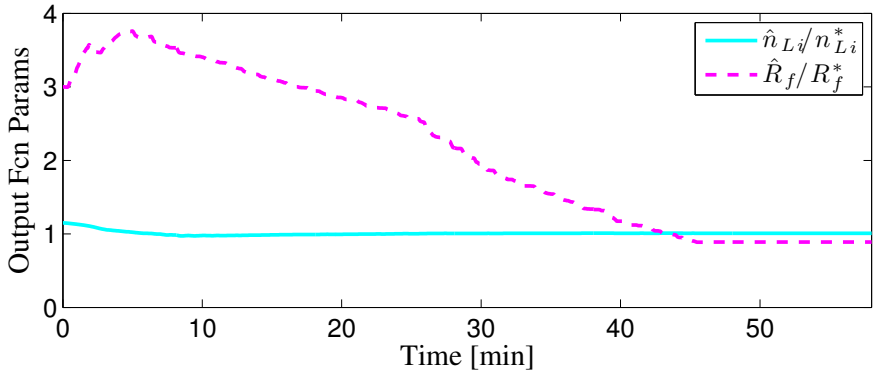
UDDS Drive Cycle Input





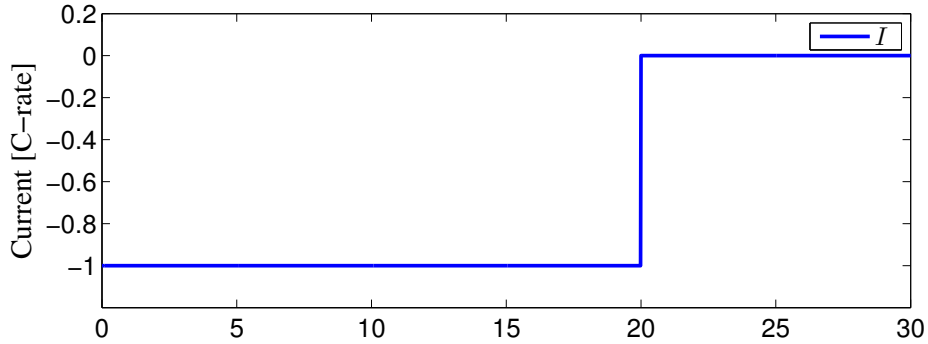


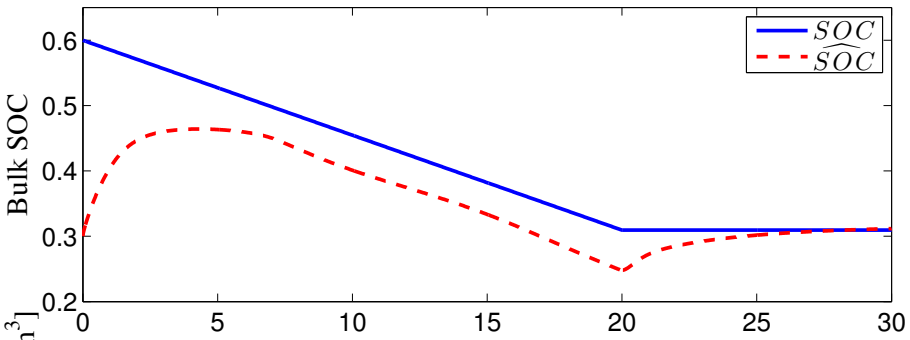


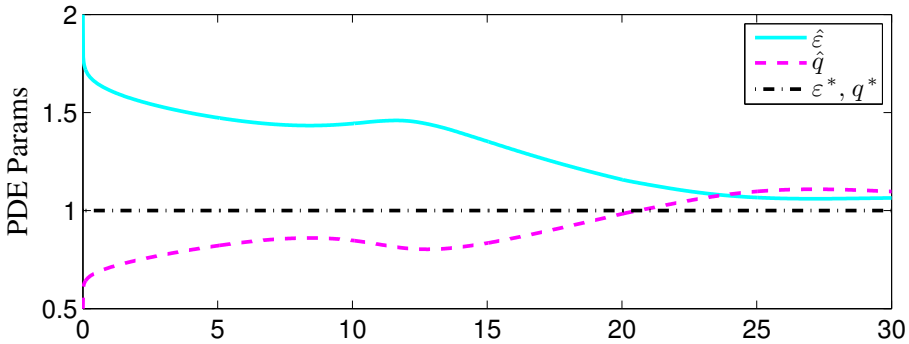


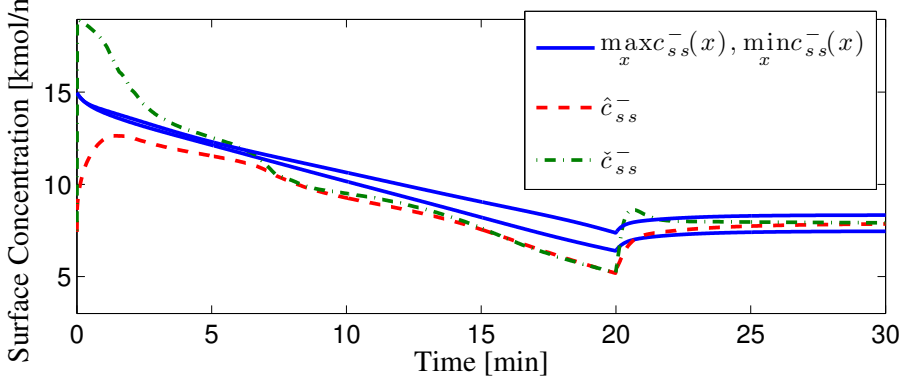
Results

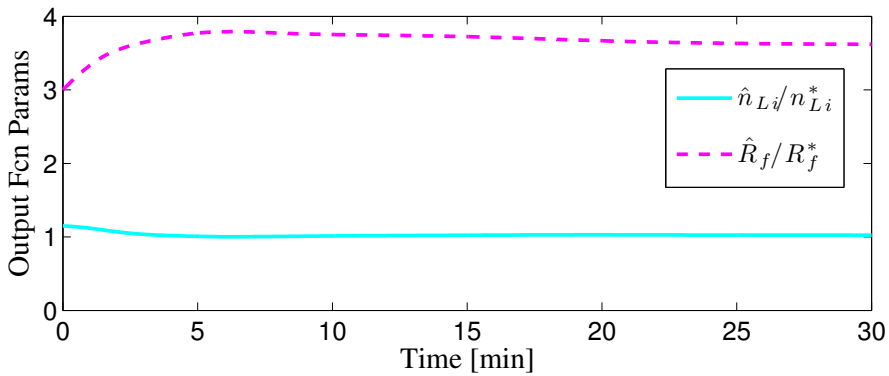
Constant 1C Discharge





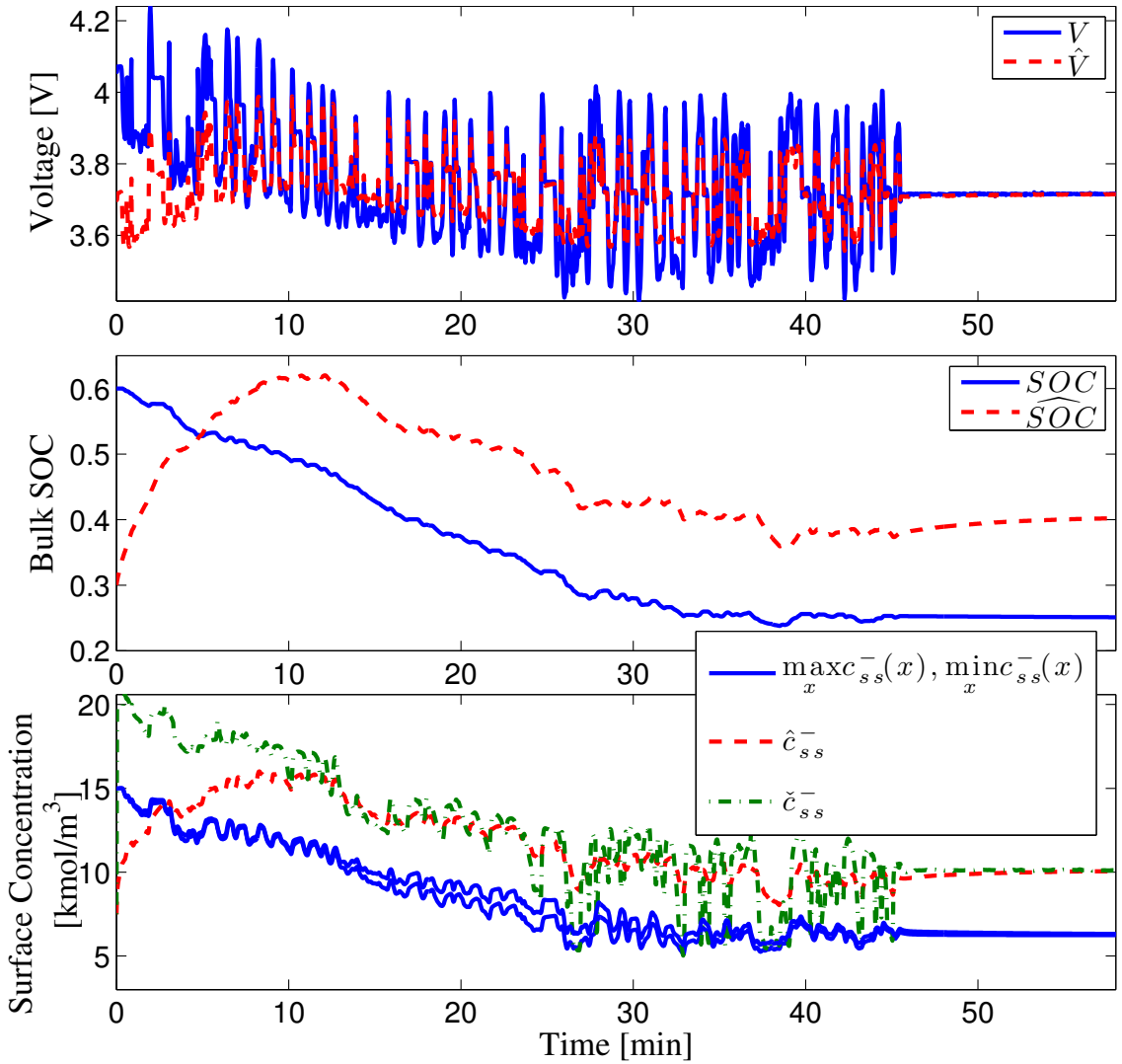






Results

No Parameter Adaption - Bias in State Estimates



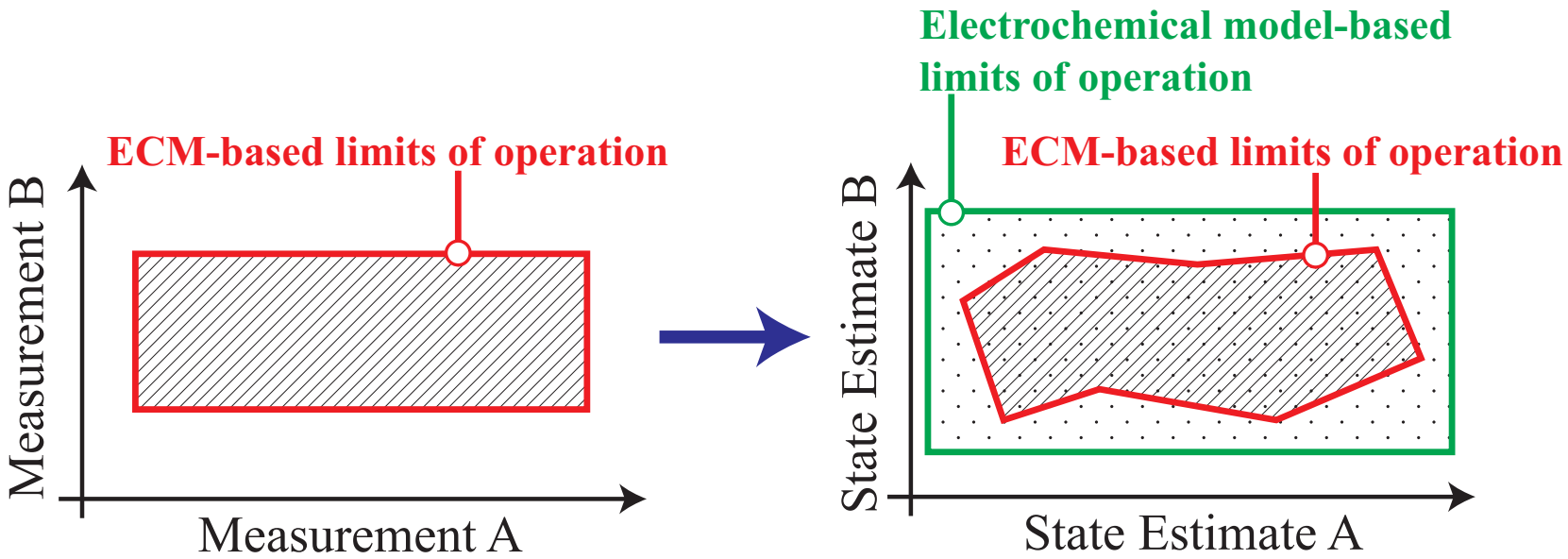
Operate Batteries at their Physical Limits



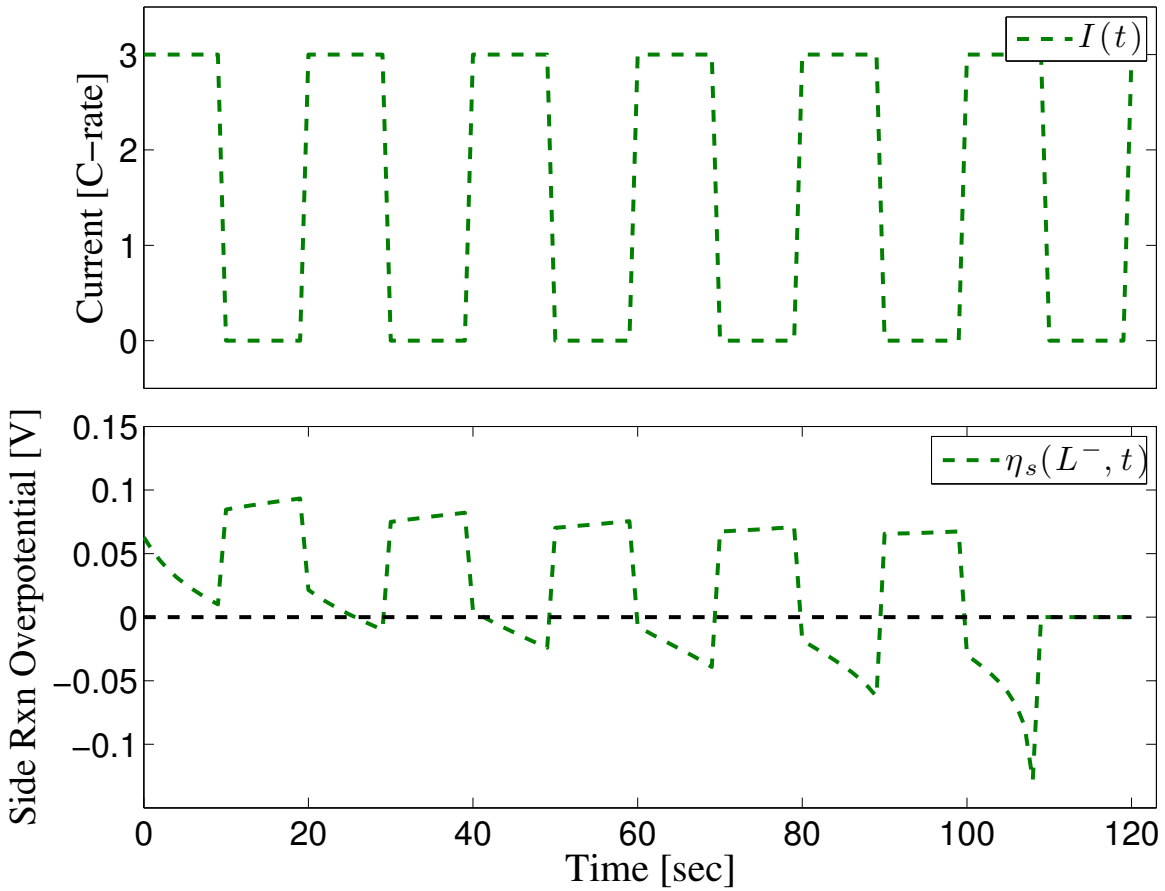
Operate Batteries at their Physical Limits

Problem Statement

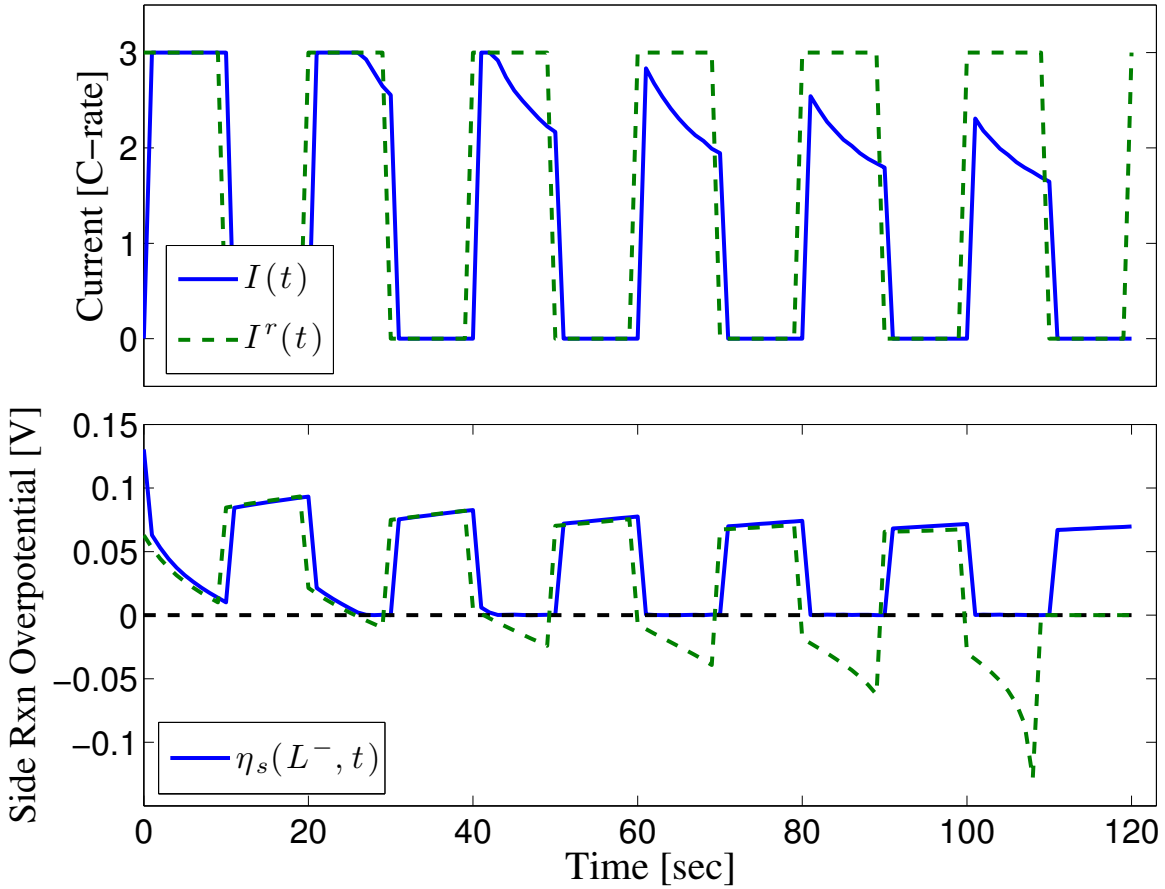
Given accurate state estimates, govern the electric current such that safe operating constraints are satisfied.



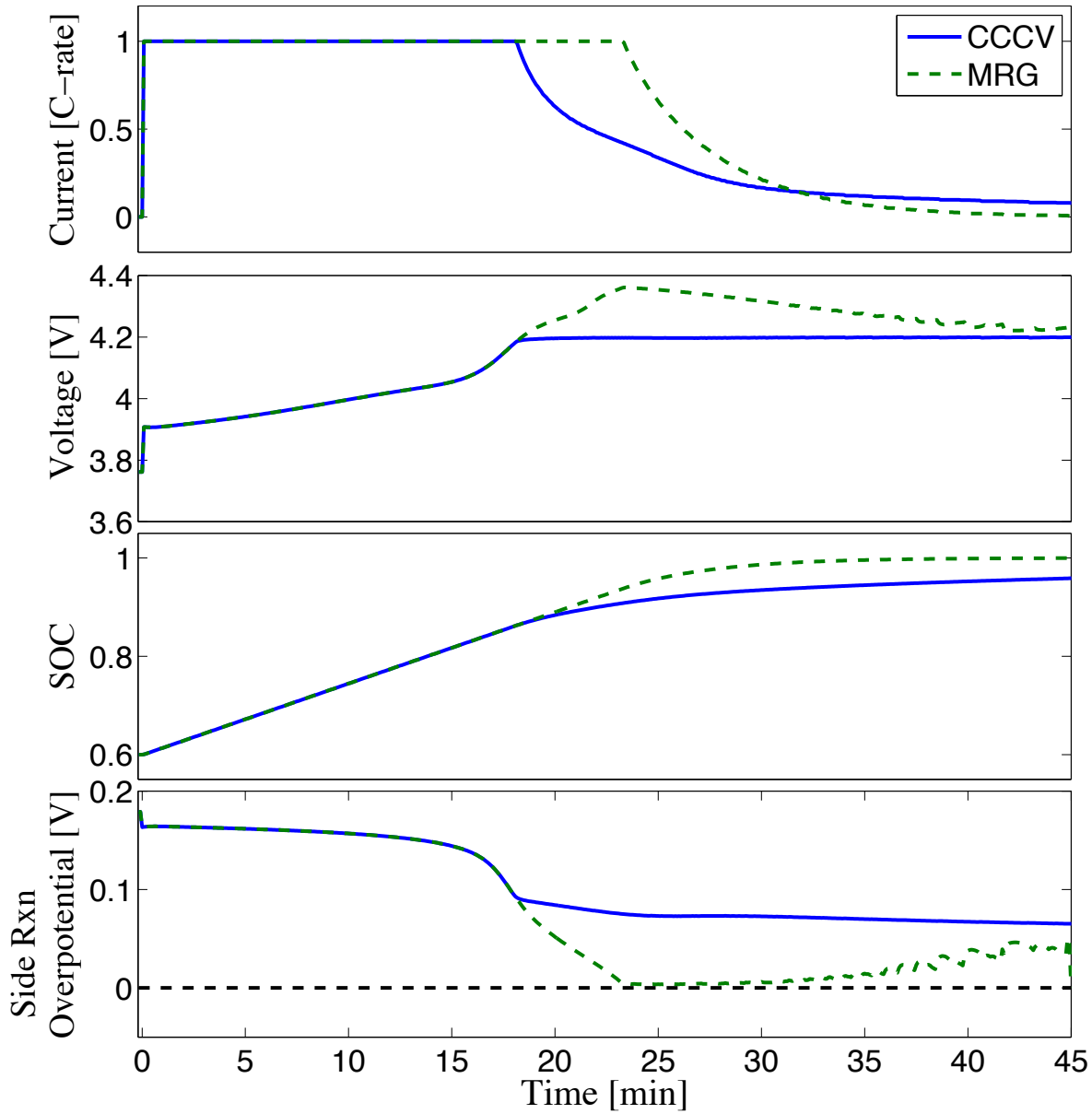
Constrained Control of EChem States



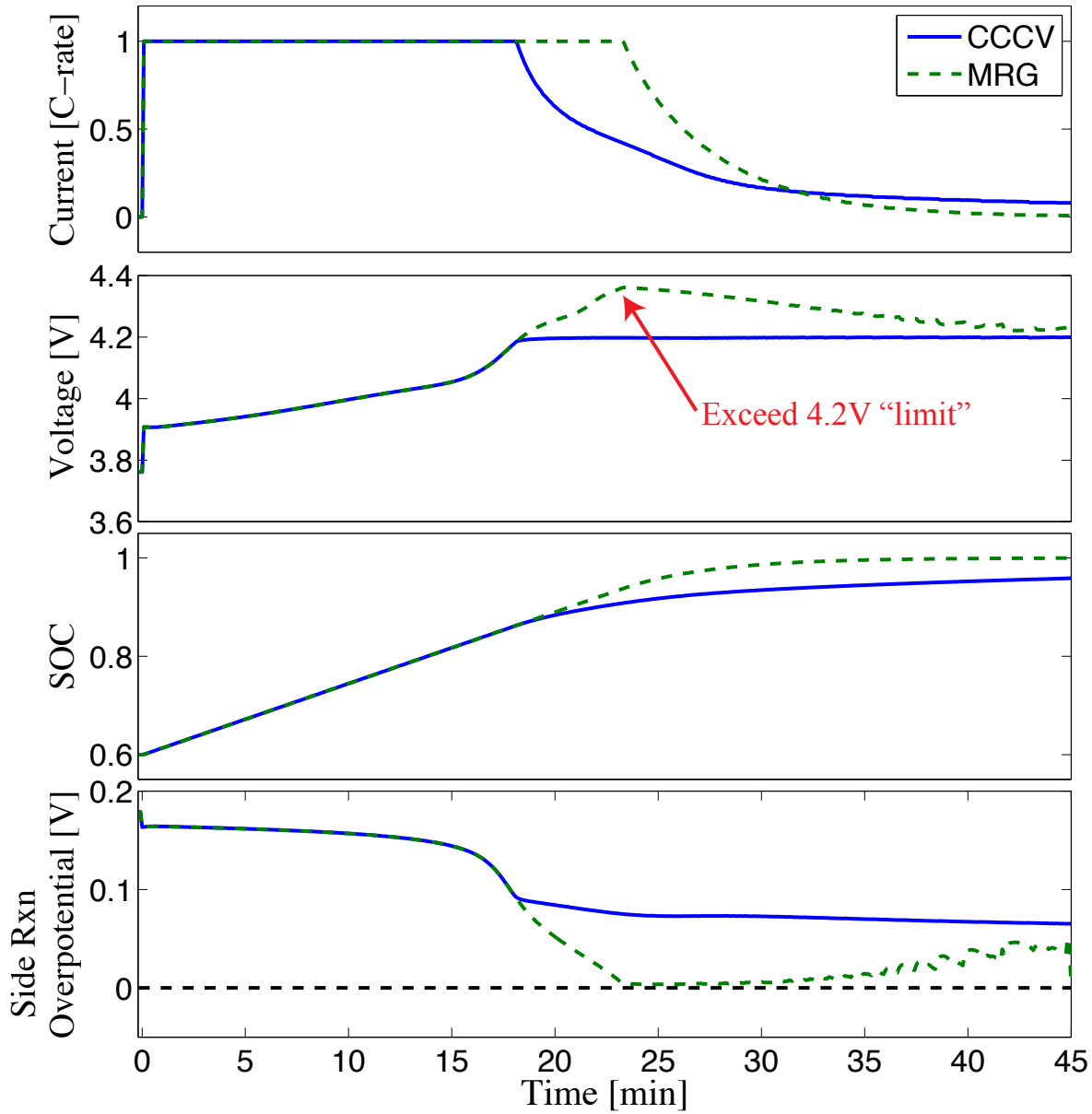
Constrained Control of EChem States



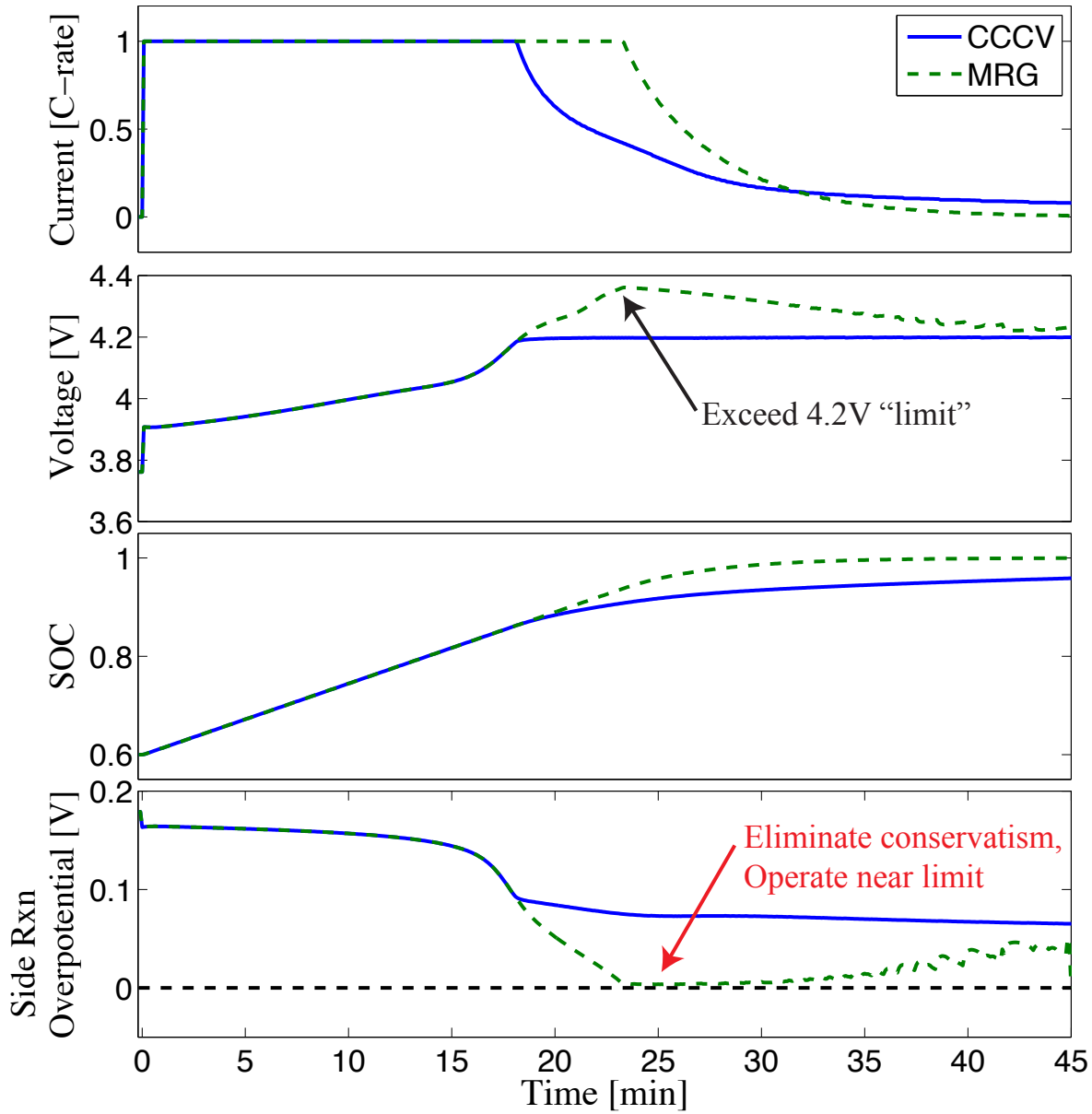
Application to Charging



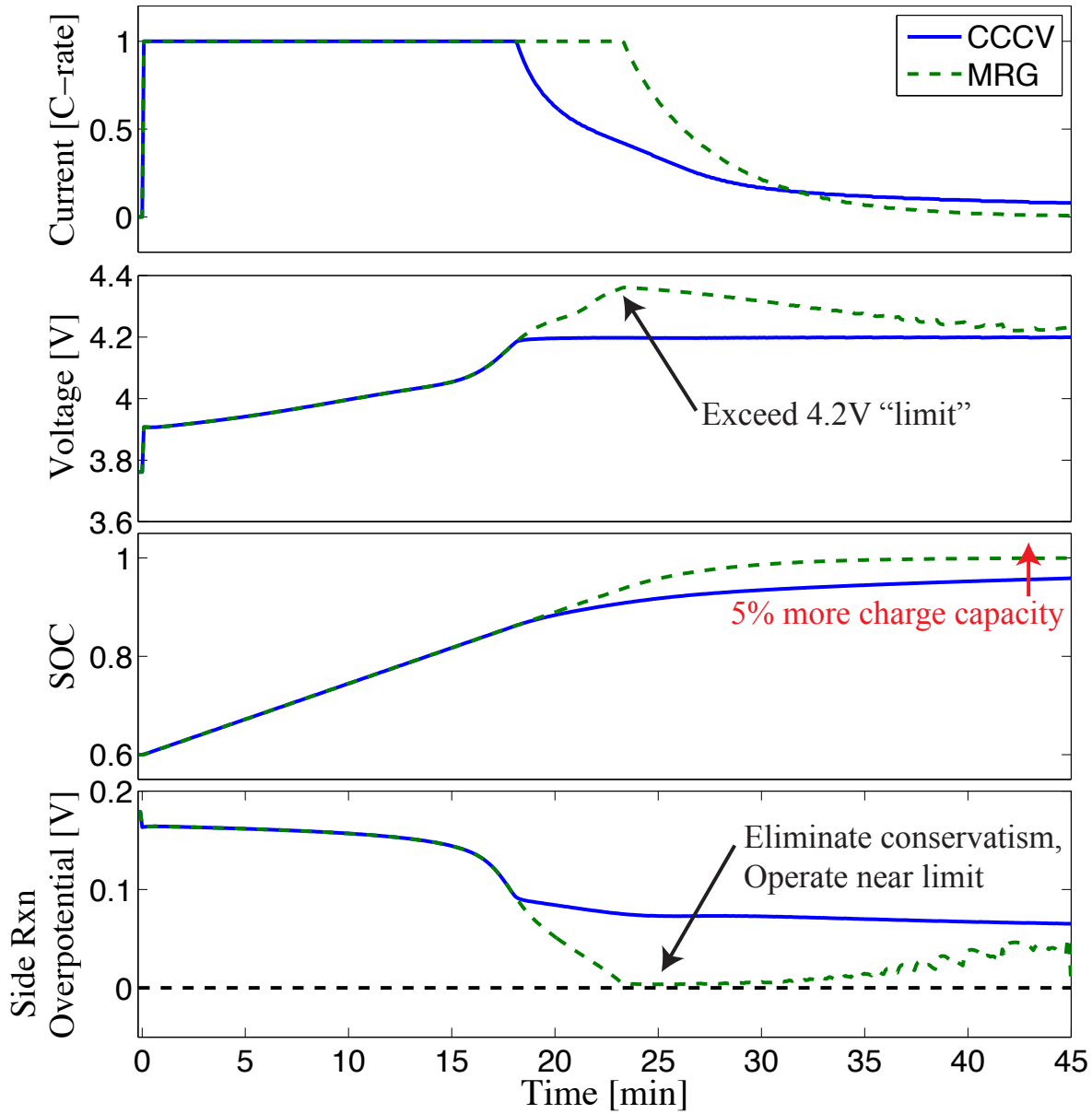
Application to Charging



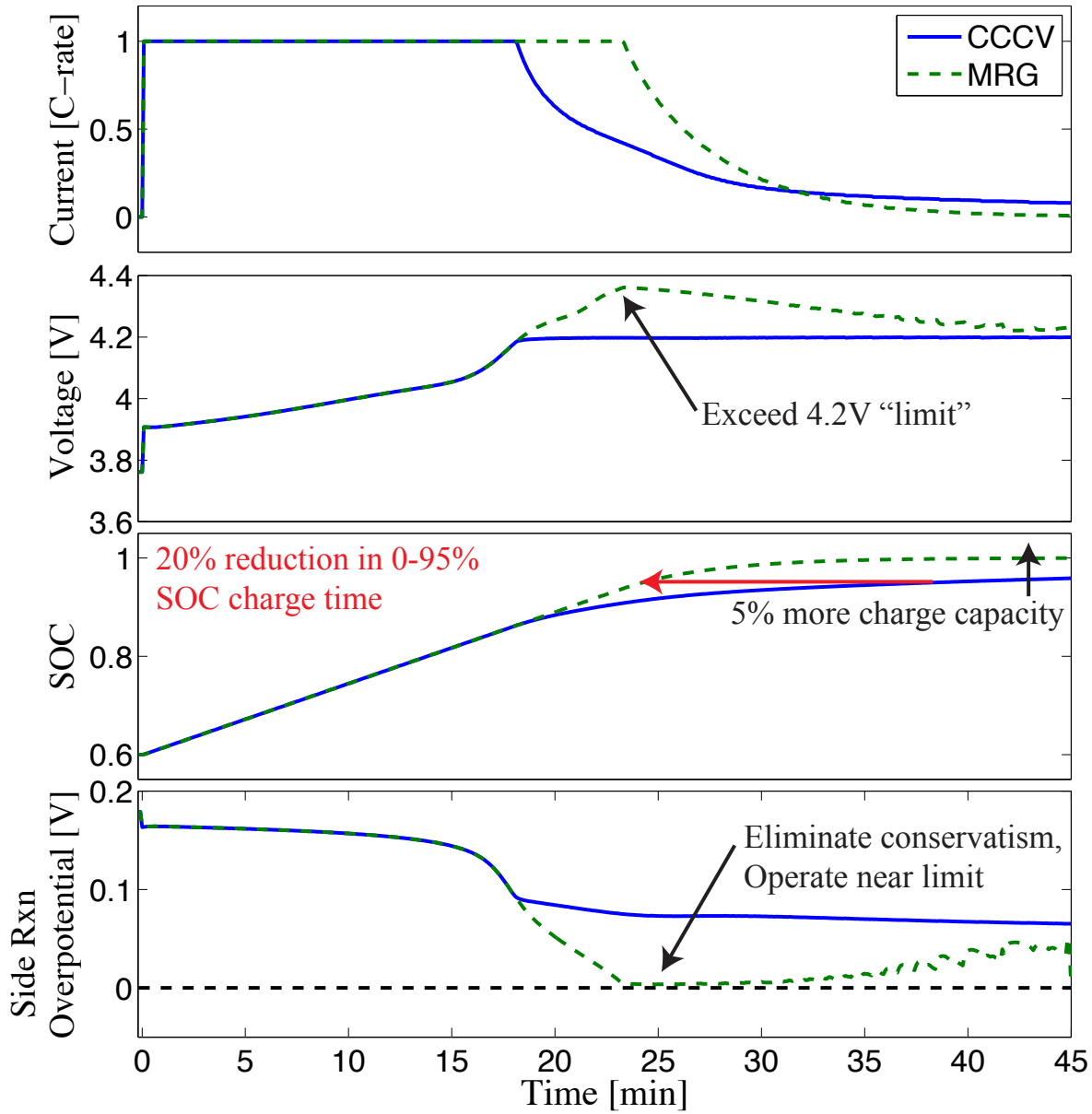
Application to Charging



Application to Charging

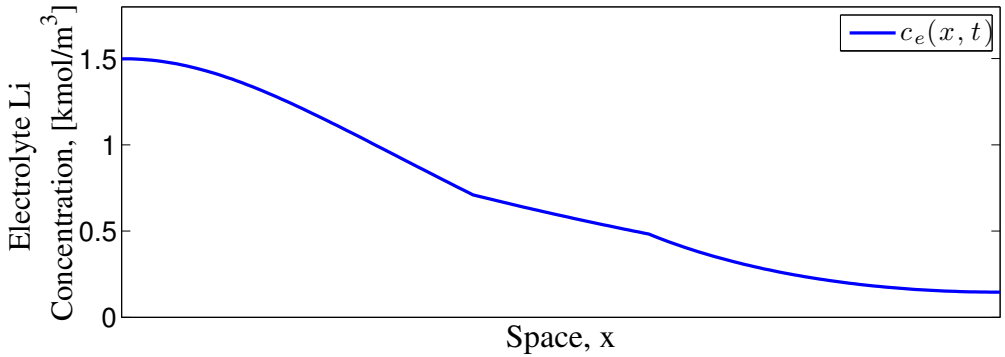


Application to Charging



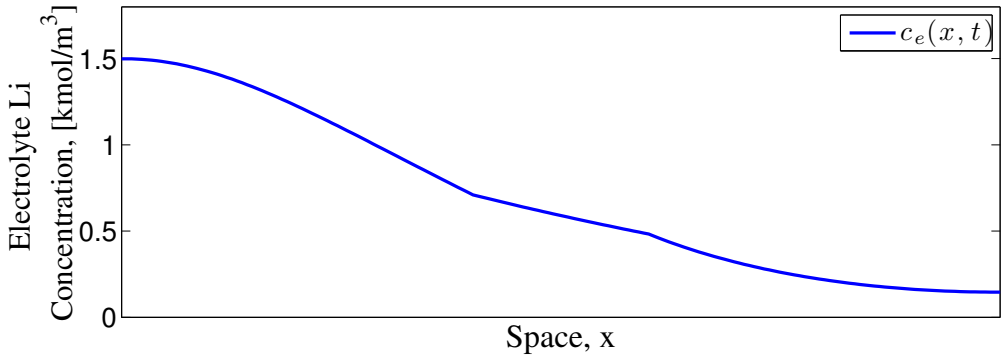
Future

Incorporate electrolyte dynamics

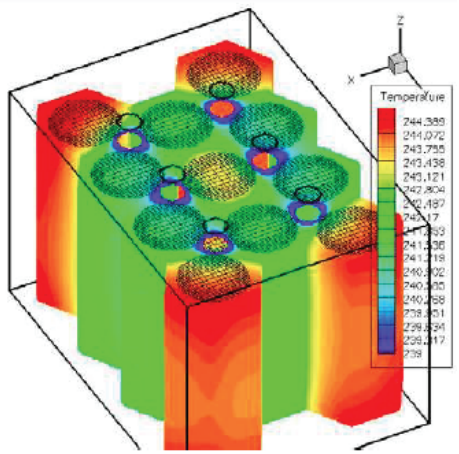


Future

Incorporate electrolyte dynamics



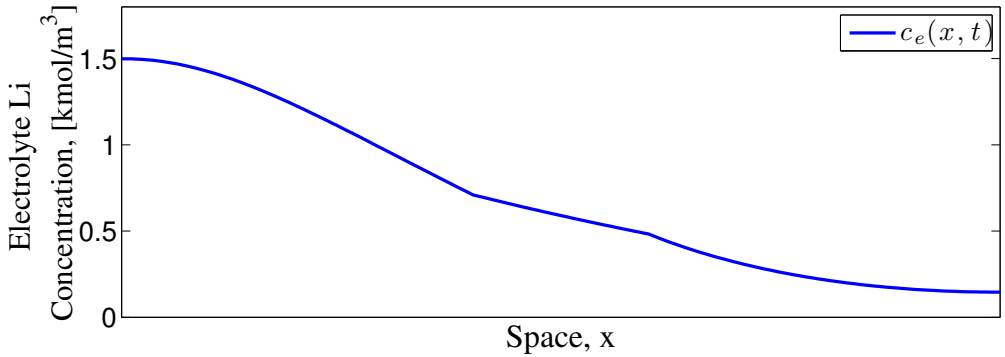
Thermal management of large battery packs



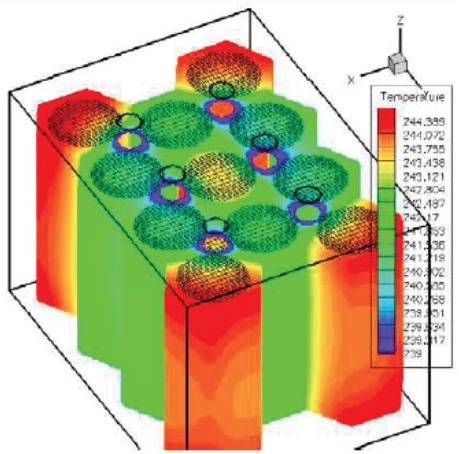
CFD simulation

Future

Incorporate electrolyte dynamics



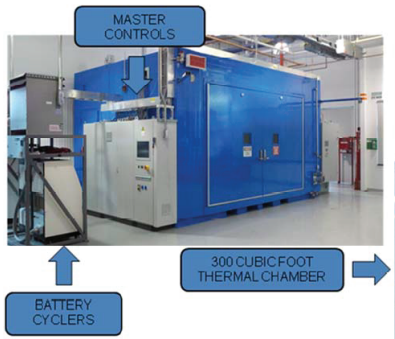
Thermal management of large battery packs

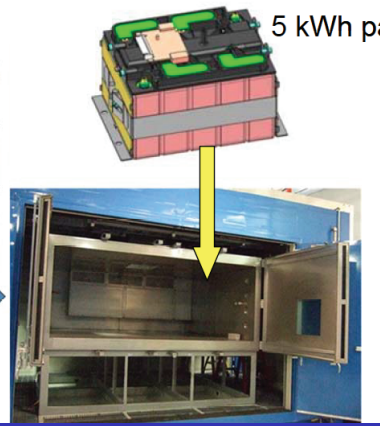


CFD simulation

Experimental validation - continued collaboration w/ Bosch RTC, Cobasys, and ARPA-E





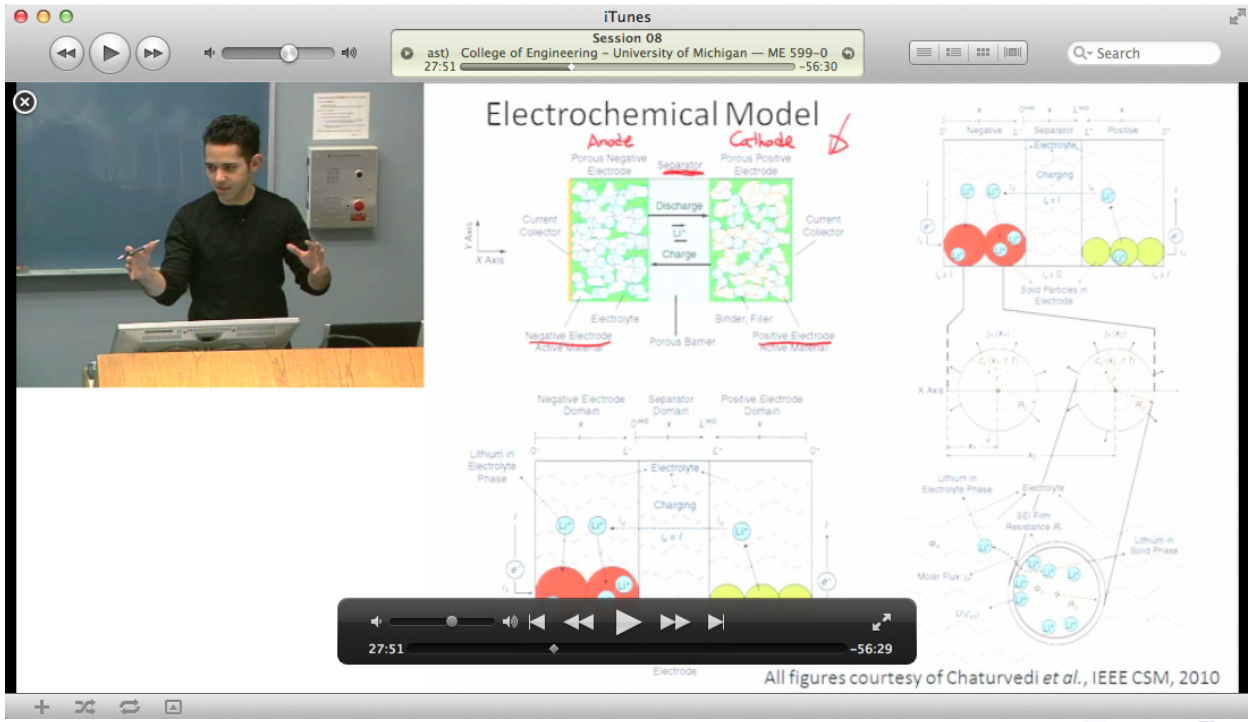


Battery Systems and Control Course

Funded by DOE-ARRA, University of Michigan

Enrollment

- Winter 2010: 59 + 5 distance
- Winter 2011: 50 + 26 distance
- ME, EE, ChemE, CS, Energy Systems, MatSci, Physics, Math
- Undergraduates
- Graduate students
- Professionals
  - Tesla Motors, General Motors, Roush, US Army



Summary

Rich playground for DSC researchers

High-fidelity models + Adv. estimation/control = Enhanced performance

Battery Systems and Control:
Critically important & Fundamentally rich

Questions?

Scott Moura, Ph.D.
http://flyingv.ucsd.edu/smoura/

Managing Overparameterization

$$\hat{\theta}_{pde} = \begin{bmatrix} \widehat{q\varepsilon^2} \\ \widehat{q\varepsilon} \\ \hat{\varepsilon} \end{bmatrix} \longrightarrow \begin{bmatrix} \hat{\varepsilon} \\ \hat{q} \end{bmatrix} = \hat{\theta}_{\varepsilon q}$$

Managing Overparameterization

$$\hat{\theta}_{pde} = \begin{bmatrix} \widehat{q\varepsilon^2} \\ \widehat{q\varepsilon} \\ \hat{\varepsilon} \end{bmatrix} \longrightarrow \begin{bmatrix} \hat{\varepsilon} \\ \hat{q} \end{bmatrix} = \hat{\theta}_{\varepsilon q}$$

$$\begin{bmatrix} 2 & 1 \\ 1 & 1 \\ 1 & 0 \end{bmatrix} \begin{bmatrix} \log \hat{\varepsilon} \\ \log \hat{q} \end{bmatrix} = \begin{bmatrix} \log\left(\hat{q\varepsilon^2}\right) \\ \log\left(\hat{q\varepsilon}\right) \\ \log\left(\hat{\varepsilon}\right) \end{bmatrix}$$

$$A_{\varepsilon q} \log(\hat{\theta}_{\varepsilon q}) = \log(\hat{\theta}_{pde})$$

$$\log(\hat{\theta}_{\varepsilon q}) = A^{+}_{\varepsilon q} \log(\hat{\theta}_{pde})$$

Managing Overparameterization

$$\hat{\theta}_{pde} = \begin{bmatrix} \widehat{q\varepsilon^2} \\ \widehat{q\varepsilon} \\ \hat{\varepsilon} \end{bmatrix} \longrightarrow \begin{bmatrix} \hat{\varepsilon} \\ \hat{q} \end{bmatrix} = \hat{\theta}_{\varepsilon q}$$

$$\begin{bmatrix} 2 & 1 \\ 1 & 1 \\ 1 & 0 \end{bmatrix} \begin{bmatrix} \log \hat{\varepsilon} \\ \log \hat{q} \end{bmatrix} = \begin{bmatrix} \log\left(\hat{q\varepsilon^2}\right) \\ \log\left(\hat{q\varepsilon}\right) \\ \log\left(\hat{\varepsilon}\right) \end{bmatrix}$$

$$A_{\varepsilon q} \log(\hat{\theta}_{\varepsilon q}) = \log(\hat{\theta}_{pde})$$

$$\log(\hat{\theta}_{\varepsilon q}) = A^{+}_{\varepsilon q} \log(\hat{\theta}_{pde})$$

Remark: $A^{+}_{\varepsilon q} = \left(A^{T}_{\varepsilon q} A_{\varepsilon q}\right)^{-1} A^{T}_{\varepsilon q}$ is the Moore-Penrose psuedoinverse of $A_{\varepsilon q}$