Adaptive Estimation and Control of Models for Battery Electrochemistry

Scott Moura, Ph.D.

UC President's Postdoctoral Fellow
Cymer Center for Control Systems & Dynamics
University of California, San Diego

Visiting Researcher
Centre Automatique et Systèmes
MINES ParisTech

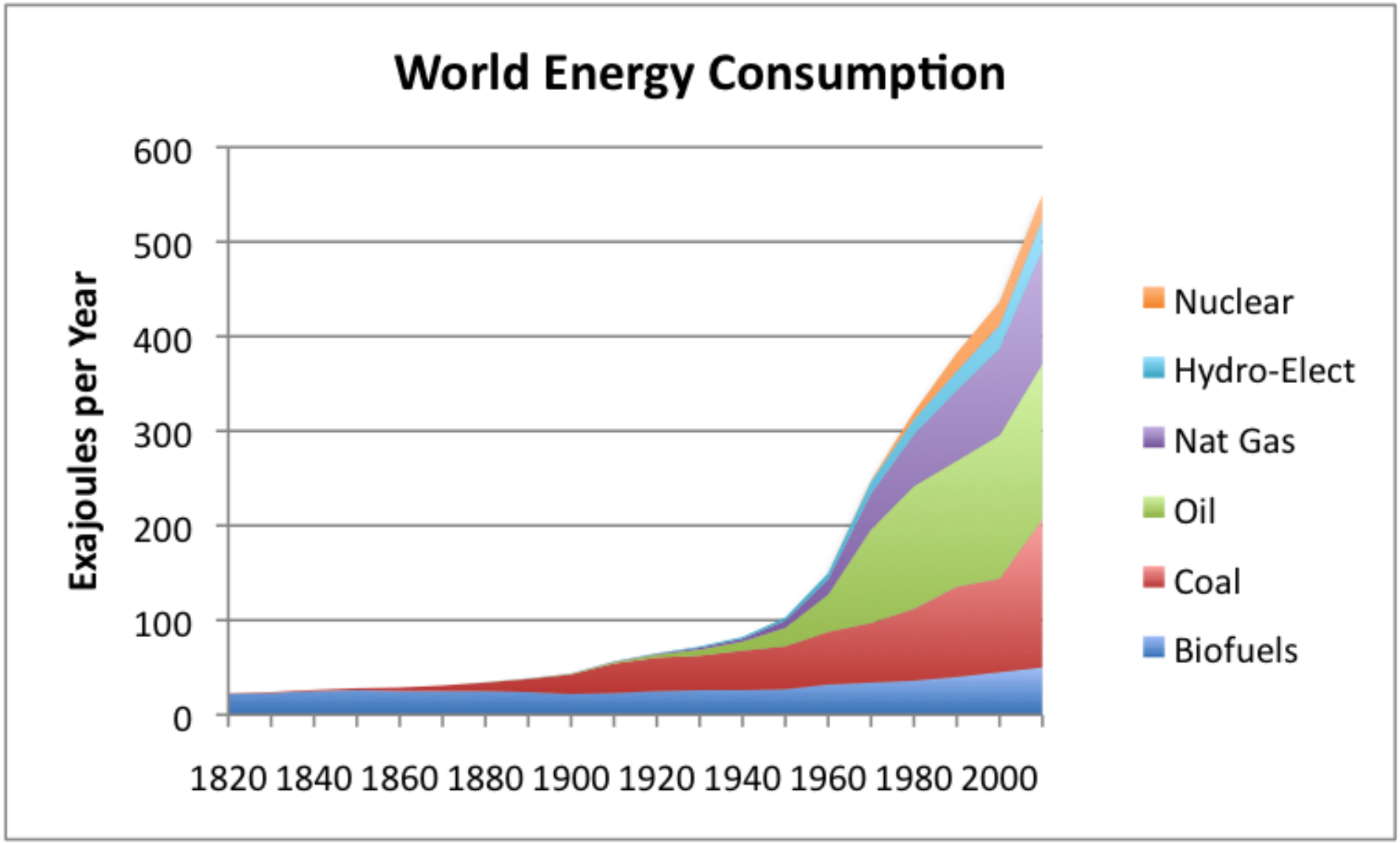
May 23, 2013
Gothenburg, Sweden











Vaclav Smil Estimates from Energy Transitions

Energy Initiatives



Denmark 50% wind penetration by 2025

China leads manufacturing of renewable tech

Brazil uses 86% renewables

THE WHITE HOUSE
WASHINGTON

EV Everywhere

SunShot

Green Button



Zero emissions vehicle (ZEV)

33% renewables by 2020

Go Solar California

Energy Crisis Solutions

Energy storage	Smart Grids
(e.g., batteries)	(e.g., demand response)

Energy Crisis Solutions

Energy storage	Smart Grids
(e.g., batteries)	(e.g., demand response)

Outline

1. Batteries
   - [Electrochemical Modeling] Incorporating Physics
   - [SOC/SOH Estimation] Looking Inside w/ Models, Meas., and Math
   - [Constrained Control] Operate at the Limits, Safely
2. Future

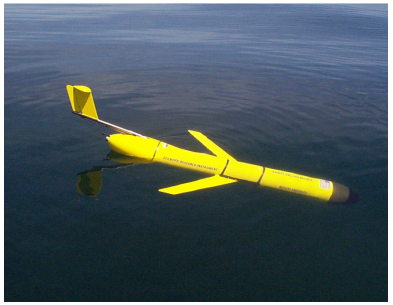
Outline

1. Batteries
   - [Electrochemical Modeling] Incorporating Physics
   - [SOC/SOH Estimation] Looking Inside w/ Models, Meas., and Math
   - [Constrained Control] Operate at the Limits, Safely
2. Future

A Golden Era


IS-1
ST. JUDE MEDICAL
Sylmar, CA USA
ACCENT SR RF
PM1210 SSR
IS-1
ST. JUDE MEDICAL
Sylmar, CA USA
ANTHEM RF
PM3212 DDDRV





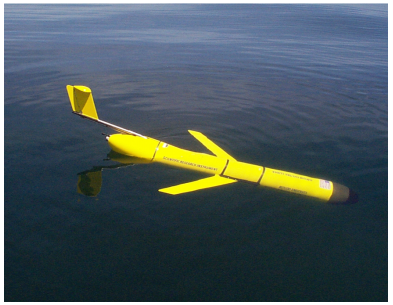




A Golden Era



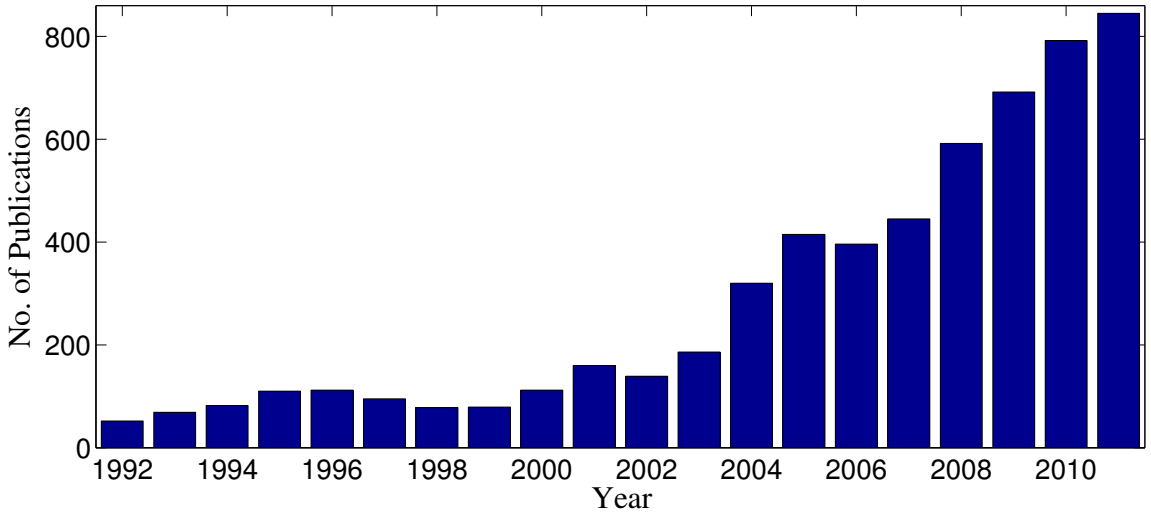








Keyword: “Battery Systems and Control”



The Battery Problem

Needs: Cheap, high energy, high power, long life

The Battery Problem

Needs: Cheap, high energy, high power, long life

Today's reality: Expensive, conservatively design/operated, die too quickly

The Battery Problem

Needs: Cheap, high energy, high power, long life

Today's reality: Expensive, conservatively design/operated, die too quickly

Some Motivating Facts

EV Batts	$800 / kWh now (2010) $125 / kWh for parity to IC engine Only 75% of available capacity is used Range anxiety inhibits adoption Lifetime risks caused by fast charging

The Battery Problem

Needs: Cheap, high energy, high power, long life

Today's reality: Expensive, conservatively design/operated, die too quickly

Some Motivating Facts

EV Batts	\$800 / kWh now (2010) \$125 / kWh for parity to IC engine Only 75% of available capacity is used Range anxiety inhibits adoption Lifetime risks caused by fast charging

Two Solutions

Design better batteries (materials science & chemistry)	Make current batteries better (estimation and control)

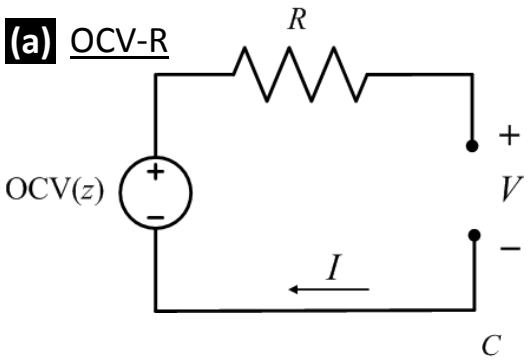
Outline

1. Batteries
   - [Electrochemical Modeling] Incorporating Physics
   - [SOC/SOH Estimation] Looking Inside w/ Models, Meas., and Math
   - [Constrained Control] Operate at the Limits, Safely
2. Future

Battery Models

Equivalent Circuit Model

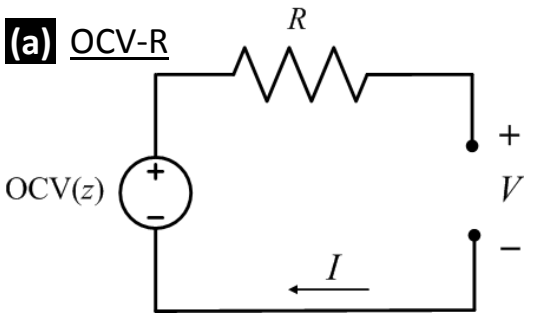
(a) OCV-R



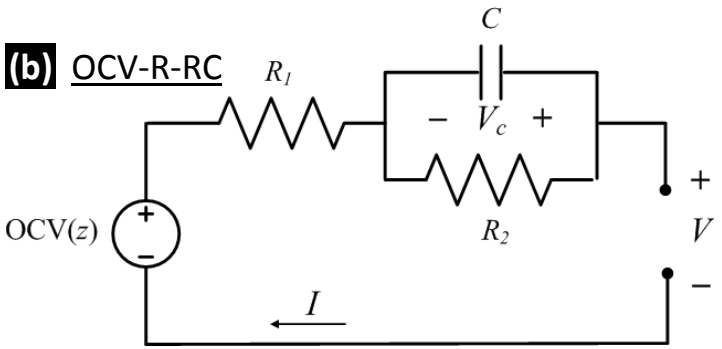
Battery Models

Equivalent Circuit Model

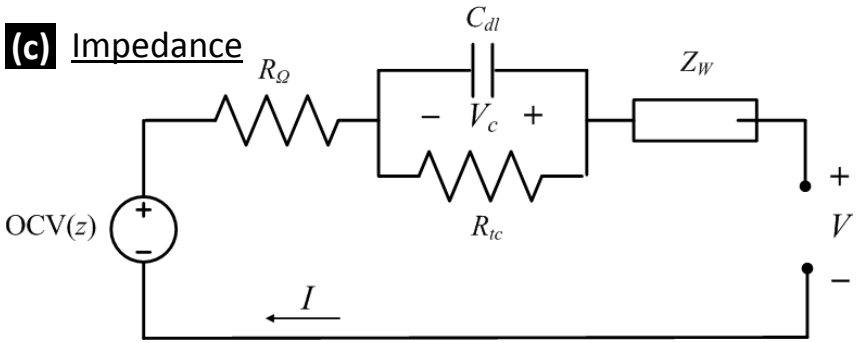
(a) OCV-R



(b) OCV-R-RC

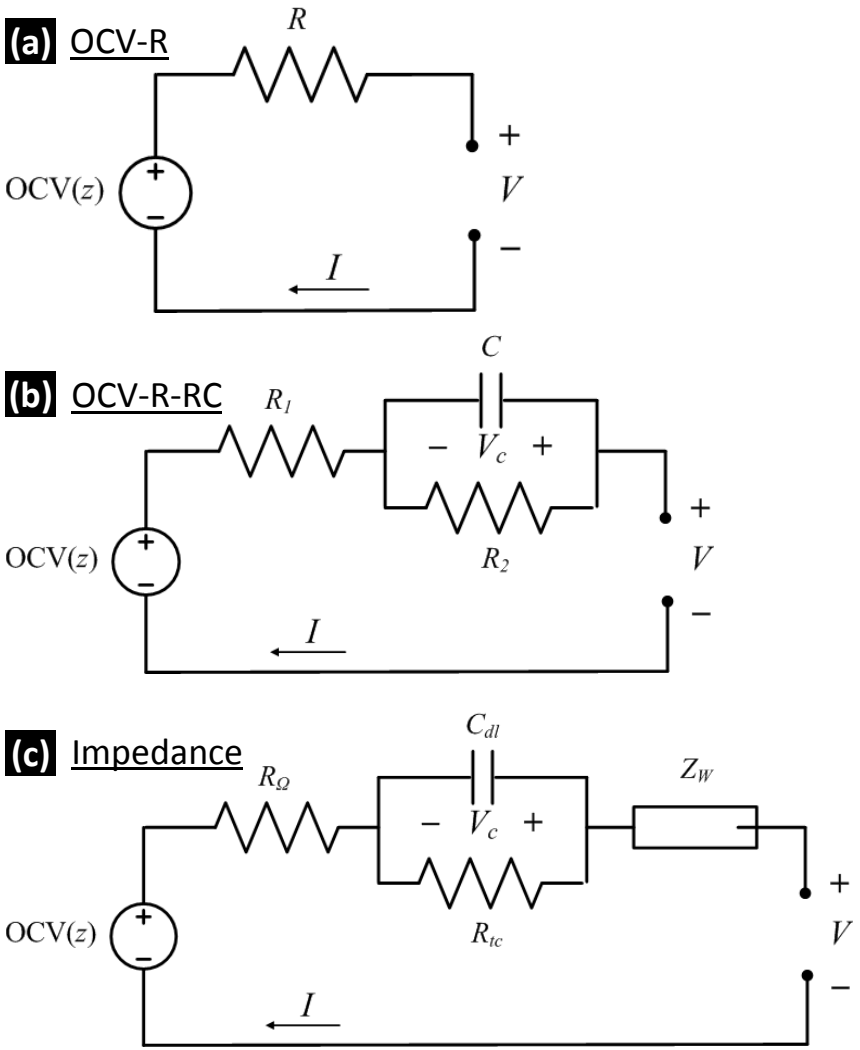


(c) Impedance

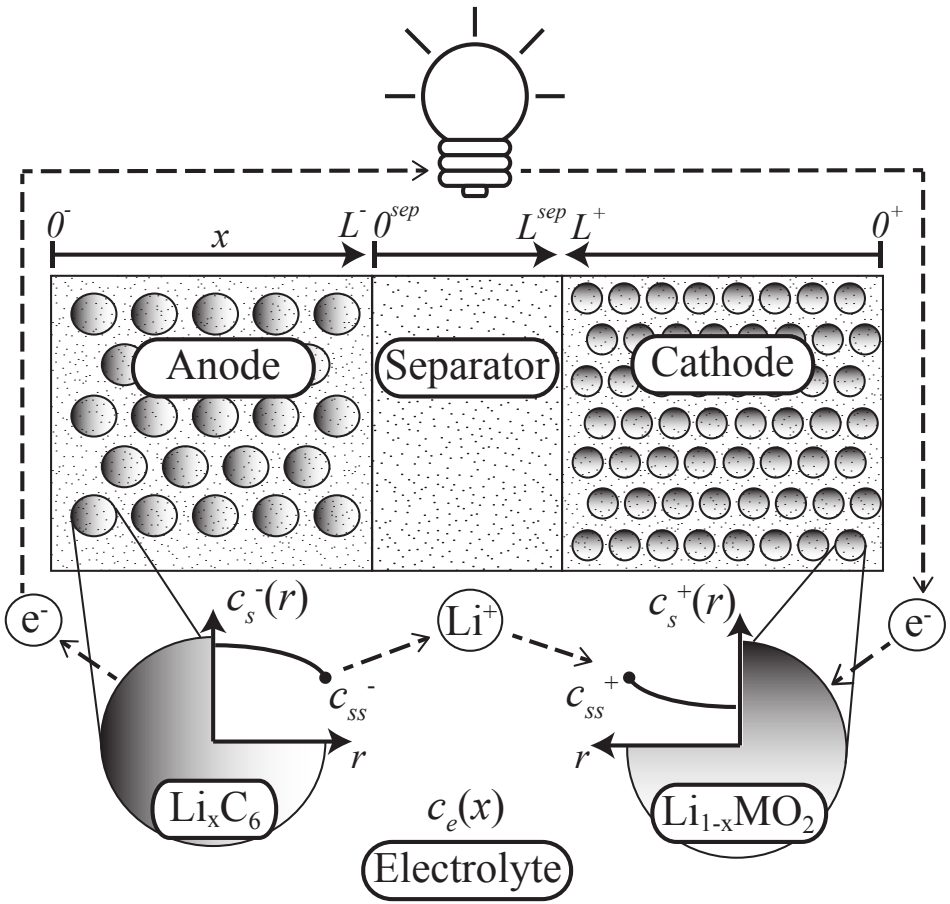


Battery Models

Equivalent Circuit Model

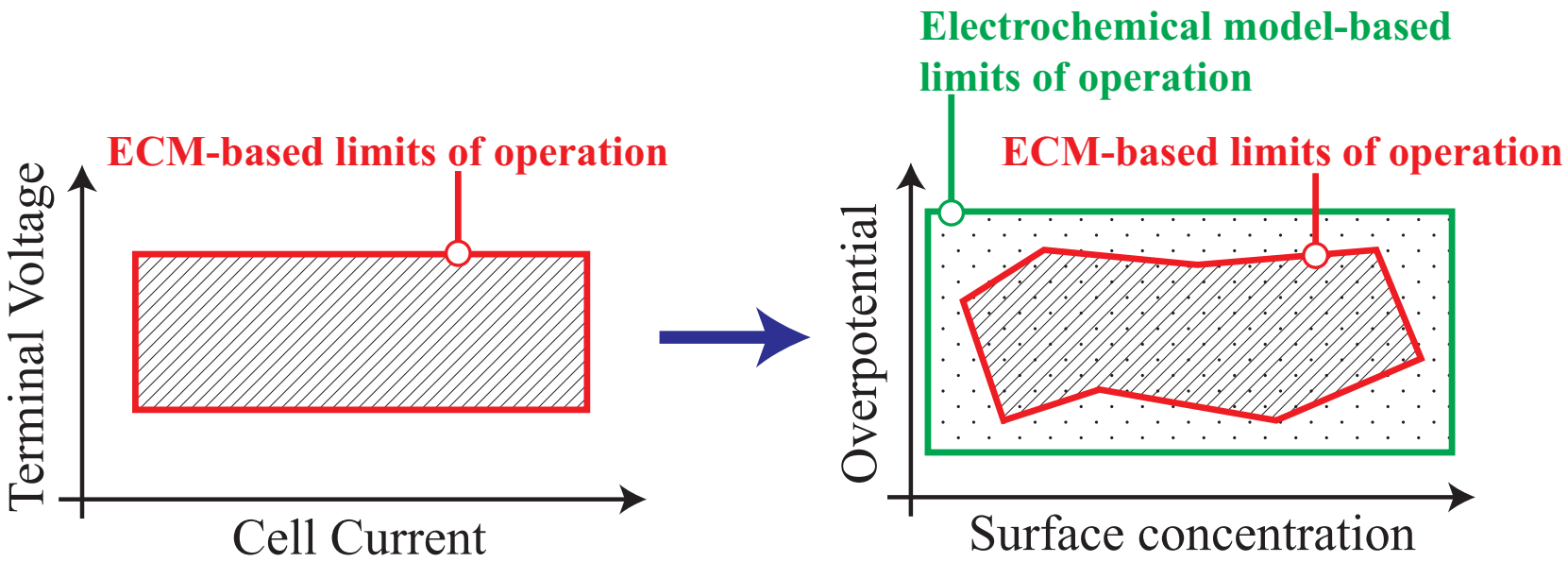


Electrochemical Model





Operate Batteries at their Physical Limits



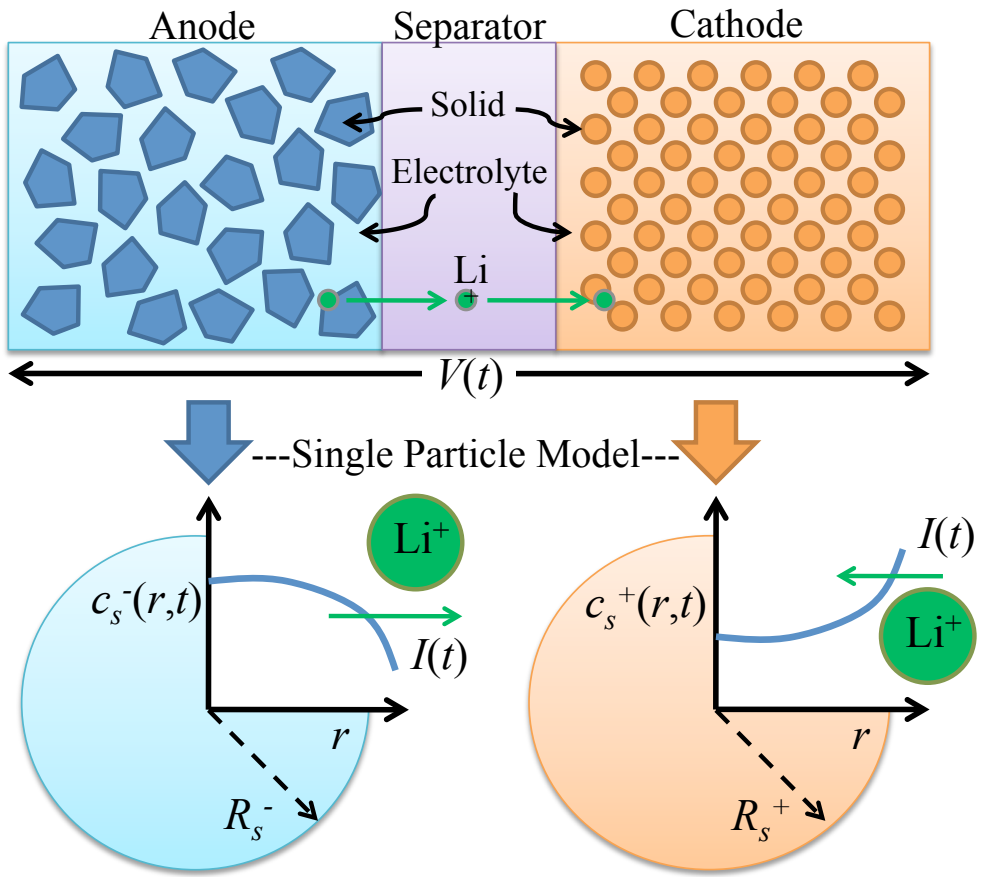
Electrochemical Model Equations

well, some of them

Description	**Equation**
Solid phase Li concentration	$\frac{\partial c_s^{\pm}}{\partial t}(x,r,t) = \frac{1}{r^2}\frac{\partial}{\partial r}\left[D_s^{\pm} r^2 \frac{\partial c_s^{\pm}}{\partial r}(x,r,t)\right]$
Electrolyte Li concentration	$\varepsilon_e \frac{\partial c_e}{\partial t}(x,t) = \frac{\partial}{\partial x}\left[\varepsilon_e D_e \frac{\partial c_e}{\partial x}(x,t) + \frac{1-t_c^0}{F} i_e^{\pm}(x,t)\right]$
Solid potential	$\frac{\partial \phi_s^{\pm}}{\partial x}(x,t) = \frac{i_e^{\pm}(x,t) - I(t)}{\sigma^{\pm}}$
Electrolyte potential	$\frac{\partial \phi_e}{\partial x}(x,t) = -\frac{i_e^{\pm}(x,t)}{\kappa} + \frac{2RT}{F}(1-t_c^0)\left(1 + \frac{d\ln f_{c/a}}{d\ln c_e}(x,t)\right)\frac{\partial \ln c_e}{\partial x}(x,t)$
Electrolyte ionic current	$\frac{\partial i_e^{\pm}}{\partial x}(x,t) = a_s F j_n^{\pm}(x,t)$
Molar flux btw phases	$j_n^{\pm}(x,t) = \frac{1}{F} i_0^{\pm}(x,t)\left[e^{\frac{\alpha_a F}{RT}\eta^{\pm}(x,t)} - e^{-\frac{\alpha_c F}{RT}\eta^{\pm}(x,t)}\right]$
Temperature	$\rho c_P \frac{dT}{dt}(t) = h\left[T^0(t) - T(t)\right] + I(t)V(t) - \int_{0^-}^{0^+} a_s F j_n(x,t)\Delta T(x,t)dx$

Animation of Li Ion Evolution

Single Particle Model (SPM)

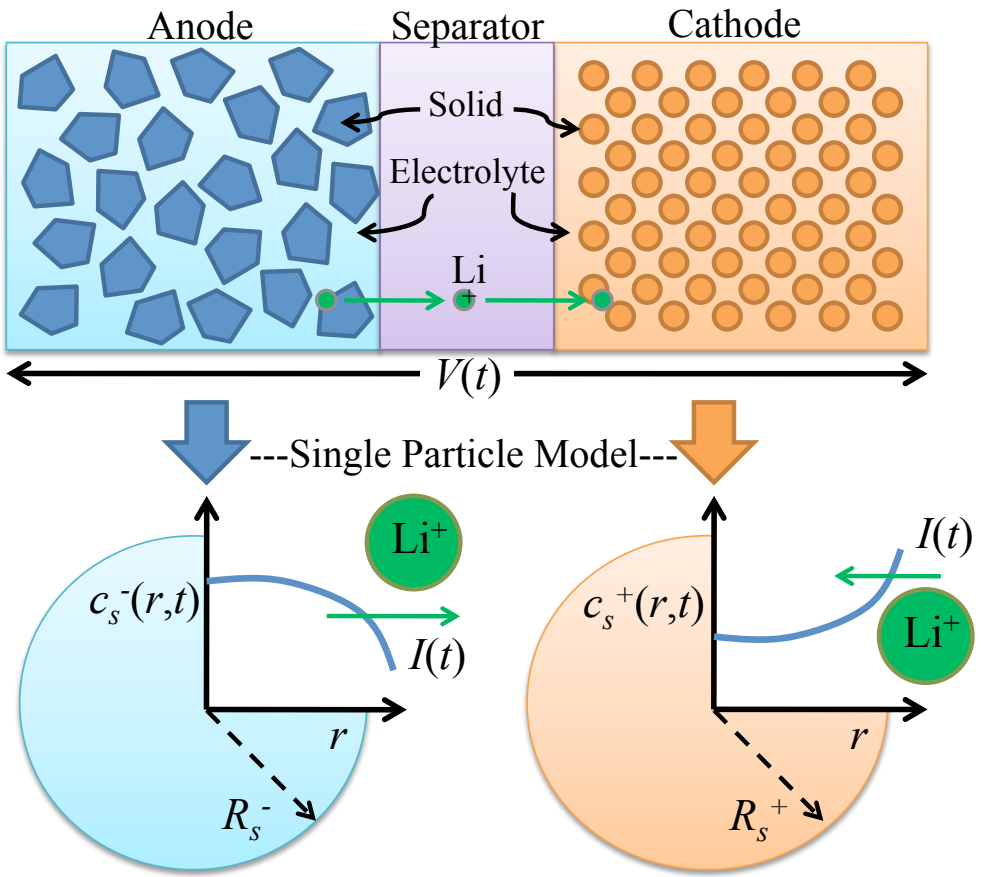


Single Particle Model (SPM)

Diffusion of Li in solid phase:

$$\frac{\partial c_s^-}{\partial t}(r,t) = \frac{D_s^-}{r^2}\frac{\partial}{\partial r}\left[r^2\frac{\partial^2 c_s^-}{\partial r^2}(r,t)\right]$$

$$\frac{\partial c_s^+}{\partial t}(r,t) = \frac{D_s^+}{r^2}\frac{\partial}{\partial r}\left[r^2\frac{\partial^2 c_s^+}{\partial r^2}(r,t)\right]$$



Single Particle Model (SPM)

Diffusion of Li in solid phase:

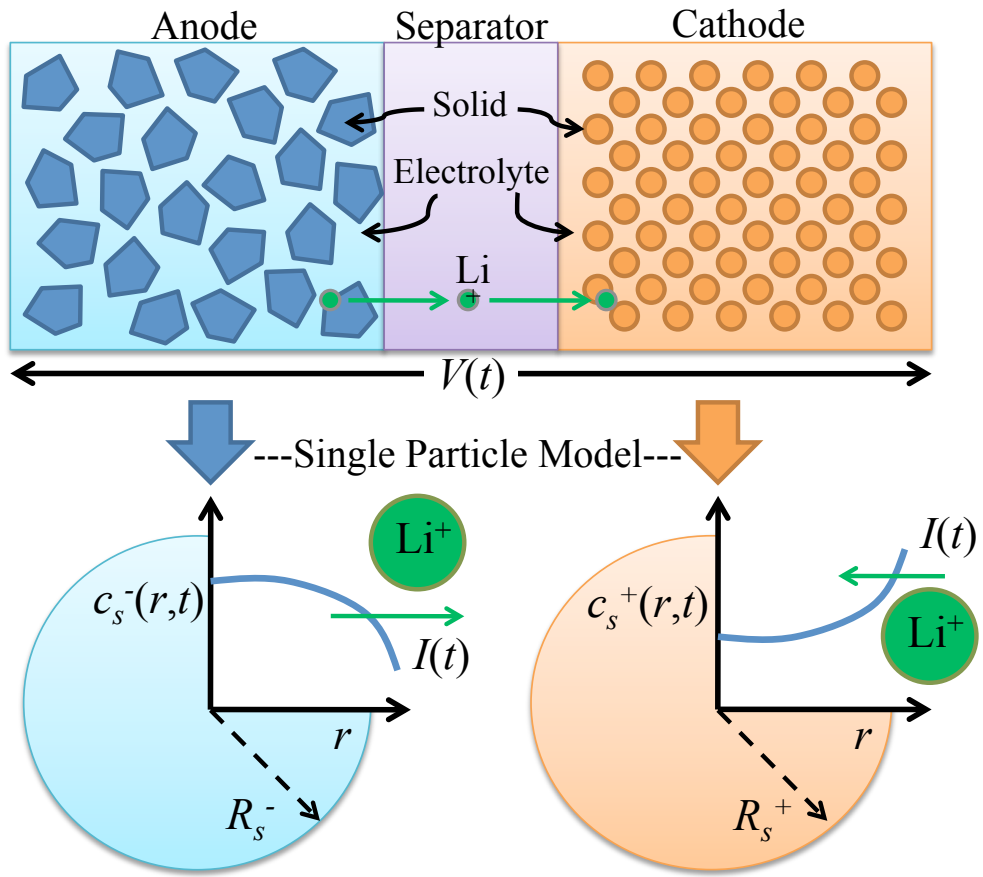
$$\frac{\partial c_s^-}{\partial t}(r,t) = \frac{D_s^-}{r^2}\frac{\partial}{\partial r}\left[r^2\frac{\partial^2 c_s^-}{\partial r^2}(r,t)\right]$$

$$\frac{\partial c_s^+}{\partial t}(r,t) = \frac{D_s^+}{r^2}\frac{\partial}{\partial r}\left[r^2\frac{\partial^2 c_s^+}{\partial r^2}(r,t)\right]$$

Boundary conditions:

$$\frac{\partial c_s^-}{\partial r}(R_s^-,t) = -\rho^+ I(t)$$

$$\frac{\partial c_s^+}{\partial r}(R_s^+,t) = \rho^- I(t)$$



Single Particle Model (SPM)

Diffusion of Li in solid phase:

$$\frac{\partial c_s^-}{\partial t}(r,t) = \frac{D_s^-}{r^2}\frac{\partial}{\partial r}\left[r^2\frac{\partial^2 c_s^-}{\partial r^2}(r,t)\right]$$

$$\frac{\partial c_s^+}{\partial t}(r,t) = \frac{D_s^+}{r^2}\frac{\partial}{\partial r}\left[r^2\frac{\partial^2 c_s^+}{\partial r^2}(r,t)\right]$$

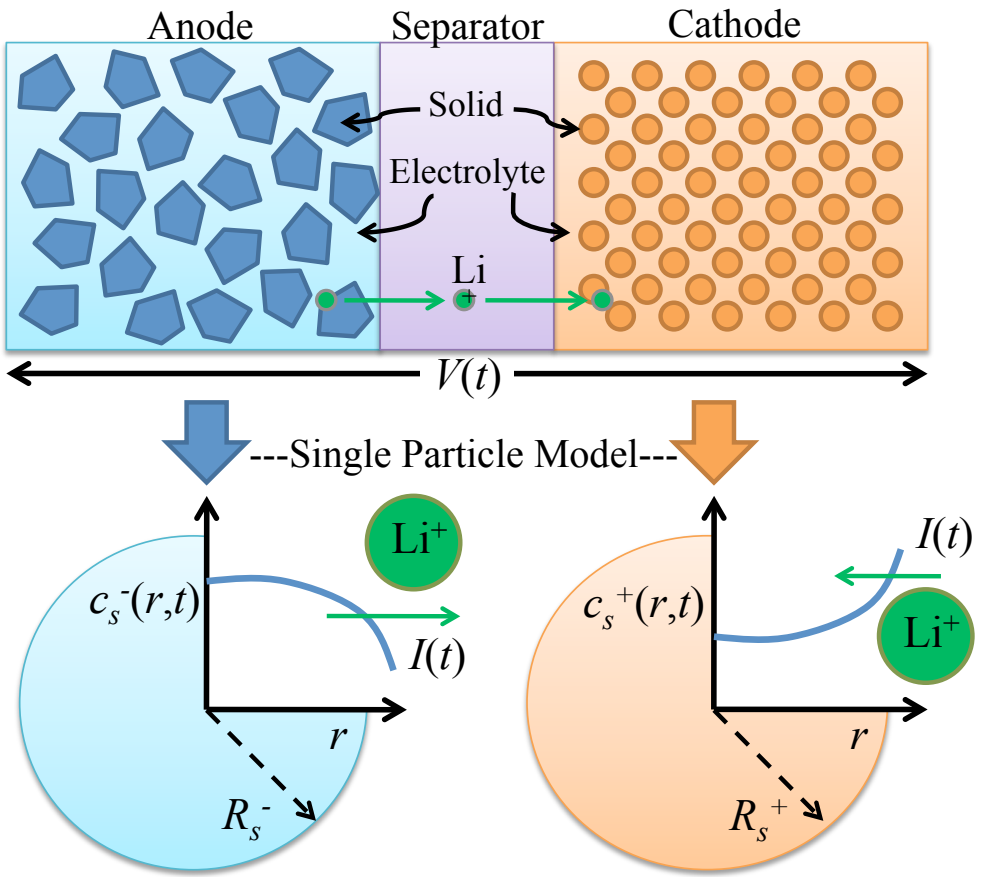
Boundary conditions:

$$\frac{\partial c_s^-}{\partial r}(R_s^-,t) = -\rho^+ I(t)$$

$$\frac{\partial c_s^+}{\partial r}(R_s^+,t) = \rho^- I(t)$$

Voltage Output Function:

$$V(t) = h(c_{ss}^-(t), c_{ss}^+(t), I(t); \theta)$$



Single Particle Model (SPM)

Diffusion of Li in solid phase:

$$\frac{\partial c_s^-}{\partial t}(r,t) = \frac{D_s^-}{r^2}\frac{\partial}{\partial r}\left[r^2\frac{\partial^2 c_s^-}{\partial r^2}(r,t)\right]$$

$$\frac{\partial c_s^+}{\partial t}(r,t) = \frac{D_s^+}{r^2}\frac{\partial}{\partial r}\left[r^2\frac{\partial^2 c_s^+}{\partial r^2}(r,t)\right]$$

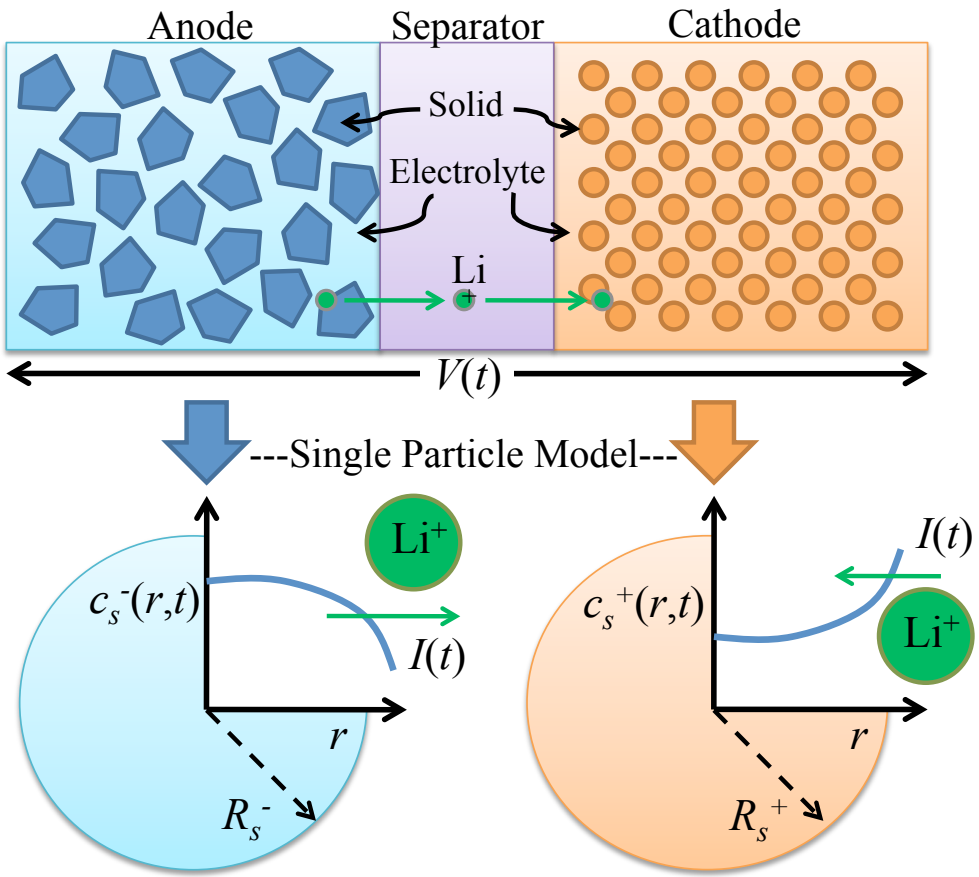
Boundary conditions:

$$\frac{\partial c_s^-}{\partial r}(R_s^-,t) = -\rho^+ I(t)$$

$$\frac{\partial c_s^+}{\partial r}(R_s^+,t) = \rho^- I(t)$$

Voltage Output Function:

$$V(t) = h(c_{ss}^-(t), c_{ss}^+(t), I(t); \theta)$$



Definitions

- SOC: Bulk concentration SOC_{bulk}, Surface concentration $c_{ss}^-(t)$
- SOH: Physical parameters, e.g. ε, q, n_{Li}, R_f

Outline

1. Batteries
   - [Electrochemical Modeling] Incorporating Physics
   - [SOC/SOH Estimation] Looking Inside w/ Models, Meas., and Math
   - [Constrained Control] Operate at the Limits, Safely
2. Future

Simplify the Math

- Model reduction to achieve observability
- Normalize time and space
- Scale spatial dimension

Model Eqns. for Observer Design: $c(r,t)$

$$\begin{aligned} \frac{\partial c}{\partial t}(r,t) &= \varepsilon \frac{\partial^2 c}{\partial r^2}(r,t) && \text{Heat PDE} \\ c(0,t) &= 0 \\ \frac{\partial c}{\partial r}(1,t) - c(1,t) &= -q\rho I(t) \\ \text{Measurement} &= c(1,t) = \check{c}_{ss}^{-}(t) \end{aligned}$$

Estimator: $\hat{c}(r,t)$

$$\begin{aligned}
\frac{\partial \hat{c}}{\partial t}(r,t) &= \varepsilon \frac{\partial^2 \hat{c}}{\partial r^2}(r,t) + p_1(r)\left[c(1,t) - \hat{c}(1,t)\right] \\
\hat{c}(0,t) &= 0 \\
\frac{\partial \hat{c}}{\partial r}(1,t) - \hat{c}(1,t) &= -q\rho I(t) + p_{10}\left[c(1,t) - \hat{c}(1,t)\right]
\end{aligned}$$

Estimator: $\hat{c}(r,t)$

$$\begin{aligned}
\frac{\partial \hat{c}}{\partial t}(r,t) &= \varepsilon \frac{\partial^2 \hat{c}}{\partial r^2}(r,t) + p_1(r)\left[c(1,t) - \hat{c}(1,t)\right] \\
\hat{c}(0,t) &= 0 \\
\frac{\partial \hat{c}}{\partial r}(1,t) - \hat{c}(1,t) &= -q\rho I(t) + p_{10}\left[c(1,t) - \hat{c}(1,t)\right]
\end{aligned}$$

Estimation Error Dynamics: $\tilde{c}(r,t) = c(r,t) - \hat{c}(r,t)$

$$\begin{aligned}
\frac{\partial \tilde{c}}{\partial t}(r,t) &= \varepsilon \frac{\partial^2 \tilde{c}}{\partial r^2}(r,t) - p_1(r)\tilde{c}(1,t) \\
\tilde{c}(0,t) &= 0 \\
\frac{\partial \tilde{c}}{\partial r}(1,t) - \tilde{c}(1,t) &= -p_{10}\tilde{c}(1,t)
\end{aligned}$$

The SOC Estimation Problem

Backstepping PDE Estimator

Estimator: $\hat{c}(r,t)$

$$\begin{aligned}
\frac{\partial \hat{c}}{\partial t}(r,t) &= \varepsilon \frac{\partial^2 \hat{c}}{\partial r^2}(r,t) + p_1(r)\left[c(1,t) - \hat{c}(1,t)\right] \\
\hat{c}(0,t) &= 0 \\
\frac{\partial \hat{c}}{\partial r}(1,t) - \hat{c}(1,t) &= -q\rho I(t) + p_{10}\left[c(1,t) - \hat{c}(1,t)\right]
\end{aligned}$$

The Concept

$$\tilde{c}(r,t) = \tilde{w}(r,t) - \int_r^1 p(r,s)\tilde{w}(s)ds$$ Backstepping Transformation

$$\frac{\partial \tilde{w}}{\partial t}(r,t) = \varepsilon \frac{\partial^2 \tilde{w}}{\partial r^2}(r,t) + \lambda \tilde{w}(r,t)$$ Exp. Stable Target System

$$\tilde{w}(0,t) = 0$$

$$\frac{\partial \tilde{w}}{\partial r}(1,t) = \frac{1}{2}\tilde{w}(1,t)$$

$$W(t) = \frac{1}{2}\int_0^1 \tilde{w}^2(x,t)dx$$

$$\dot{W}(t) \leq -\gamma W(t)$$

The SOC Estimation Problem

Backstepping PDE Estimator

Estimator: $\hat{c}(r,t)$

$$\begin{aligned}
\frac{\partial \hat{c}}{\partial t}(r,t) &= \varepsilon \frac{\partial^2 \hat{c}}{\partial r^2}(r,t) + p_1(r)\left[c(1,t) - \hat{c}(1,t)\right] \\
\hat{c}(0,t) &= 0 \\
\frac{\partial \hat{c}}{\partial r}(1,t) - \hat{c}(1,t) &= -q\rho I(t) + p_{10}\left[c(1,t) - \hat{c}(1,t)\right]
\end{aligned}$$

Kernel PDE

$$p(r,s) : \mathcal{D} \to \mathbb{R}, \qquad \mathcal{D} = \{(r,s) | 0 \le r \le s \le 1\}$$

$$p_{rr}(r,s) - p_{ss}(r,s) = \frac{\lambda}{\varepsilon} p(r,s) \qquad p_1(r) = -p_s(r,1) - \frac{1}{2} p(r,1)$$

$$p(0,s) = 0 \qquad p_{10} = \frac{3 - \lambda/\varepsilon}{2}$$

$$p(r,r) = \frac{\lambda}{2\varepsilon} r$$

Estimator: $\hat{c}(r,t)$

$$\begin{aligned}
\frac{\partial \hat{c}}{\partial t}(r,t) &= \varepsilon \frac{\partial^2 \hat{c}}{\partial r^2}(r,t) + p_1(r)\left[c(1,t) - \hat{c}(1,t)\right] \\
\hat{c}(0,t) &= 0 \\
\frac{\partial \hat{c}}{\partial r}(1,t) - \hat{c}(1,t) &= -q\rho I(t) + p_{10}\left[c(1,t) - \hat{c}(1,t)\right]
\end{aligned}$$

Explicit Solution to Estimator Gains

$$p_1(r) = \frac{-\lambda r}{2\varepsilon z}\left[I_1(z) - \frac{2\lambda}{\varepsilon z} I_2(z)\right] \qquad \text{where} \quad z = \sqrt{\frac{\lambda}{\varepsilon}(r^2-1)}$$

$$p_{10} = \frac{1}{2}\left(3 - \frac{\lambda}{\varepsilon}\right)$$

The SOH Estimation Problem

Problem Statement

Estimate physical parameters from measurements $I(t), V(t)$ and SPM

The SOH Estimation Problem

Problem Statement

Estimate physical parameters from measurements $I(t), V(t)$ and SPM

Relate uncertain parameters to SOH-related concepts

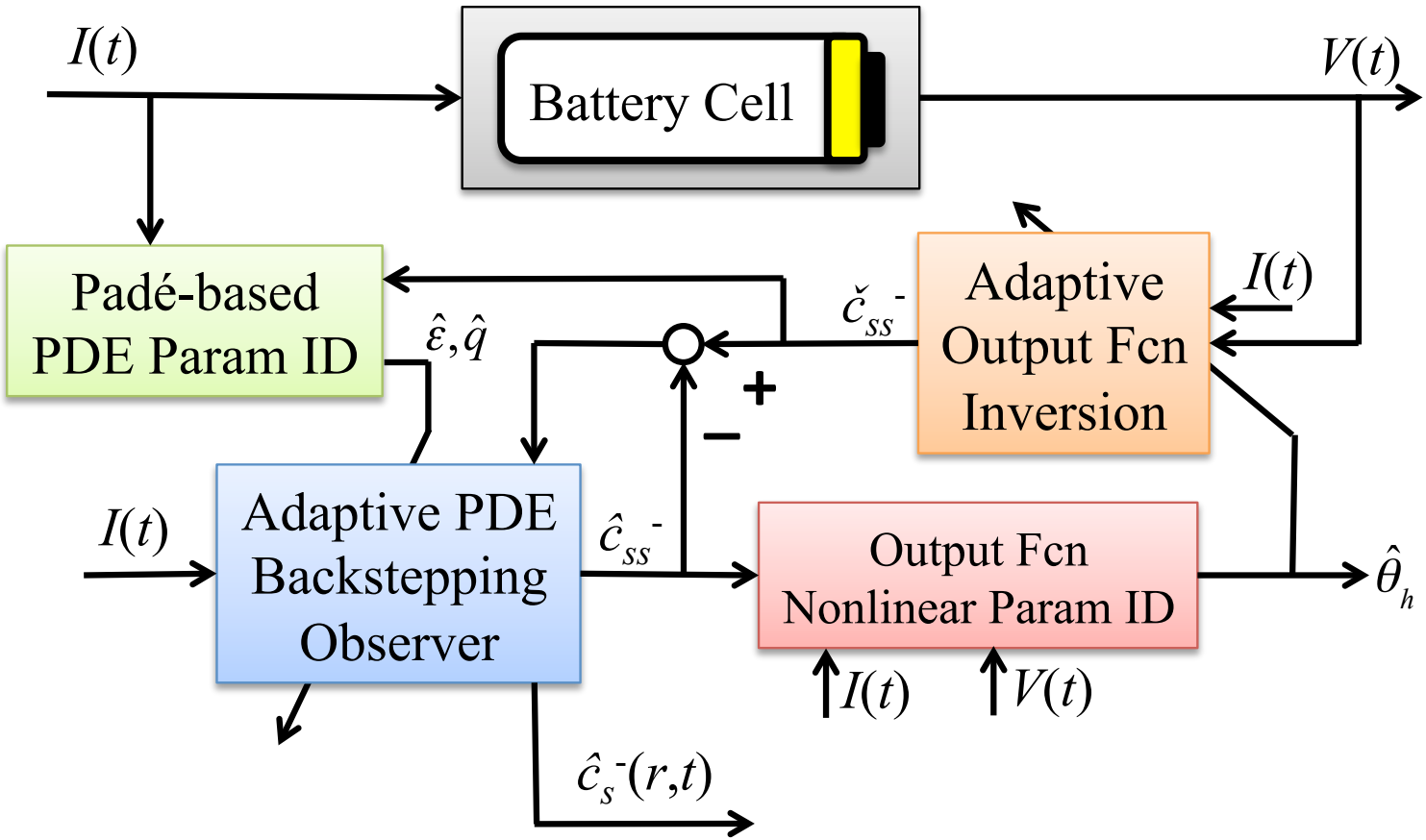
- Capacity fade
- Power fade

Technical Challenges

- PDE models
- Nonlinear in parameters

Adaptive Observer

Combined State & Parameter Estimation



Padé-based PDE Parameter Identification

PDE Model

$$\frac{\partial c}{\partial t}(r,t) = \varepsilon \frac{\partial^2 c}{\partial r^2}(r,t)$$

$$c(0,t) = 0$$

$$\frac{\partial c}{\partial r}(1,t) - c(1,t) = -q\rho I(t)$$

Padé-based PDE Parameter Identification

PDE Model

$$\frac{\partial c}{\partial t}(r,t) = \varepsilon \frac{\partial^2 c}{\partial r^2}(r,t)$$

$$c(0,t) = 0$$

$$\frac{\partial c}{\partial r}(1,t) - c(1,t) = -q\rho I(t)$$

Challenge for adaptive observers:

- Cannot re-express model such that ε multiplies measured signals

Padé-based PDE Parameter Identification

PDE Model

$$\frac{\partial c}{\partial t}(r,t) = \varepsilon \frac{\partial^2 c}{\partial r^2}(r,t)$$
$$c(0,t) = 0$$
$$\frac{\partial c}{\partial r}(1,t) - c(1,t) = -q\rho I(t)$$

Challenge for adaptive observers:

- Cannot re-express model such that ε multiplies measured signals

Main Idea:

- Approximate PDE transfer function via Padé representation

$$\frac{c_{ss}(s)}{I(s)} = \frac{-q\rho \sinh\left(\sqrt{\frac{s}{\varepsilon}}\right)}{\left(\sqrt{\frac{s}{\varepsilon}}\right)\cosh\left(\sqrt{\frac{s}{\varepsilon}}\right) - \sinh\left(\sqrt{\frac{s}{\varepsilon}}\right)} \approx \frac{-3\rho q\varepsilon^2 - \frac{2}{7}\rho q\varepsilon s}{\varepsilon s + \frac{1}{35}s^2}$$

Padé-based PDE Parameter Identification

PDE Model

$$\frac{\partial c}{\partial t}(r,t) = \varepsilon \frac{\partial^2 c}{\partial r^2}(r,t)$$
$$c(0,t) = 0$$
$$\frac{\partial c}{\partial r}(1,t) - c(1,t) = -q\rho I(t)$$

Challenge for adaptive observers:

- Cannot re-express model such that ε multiplies measured signals

Main Idea:

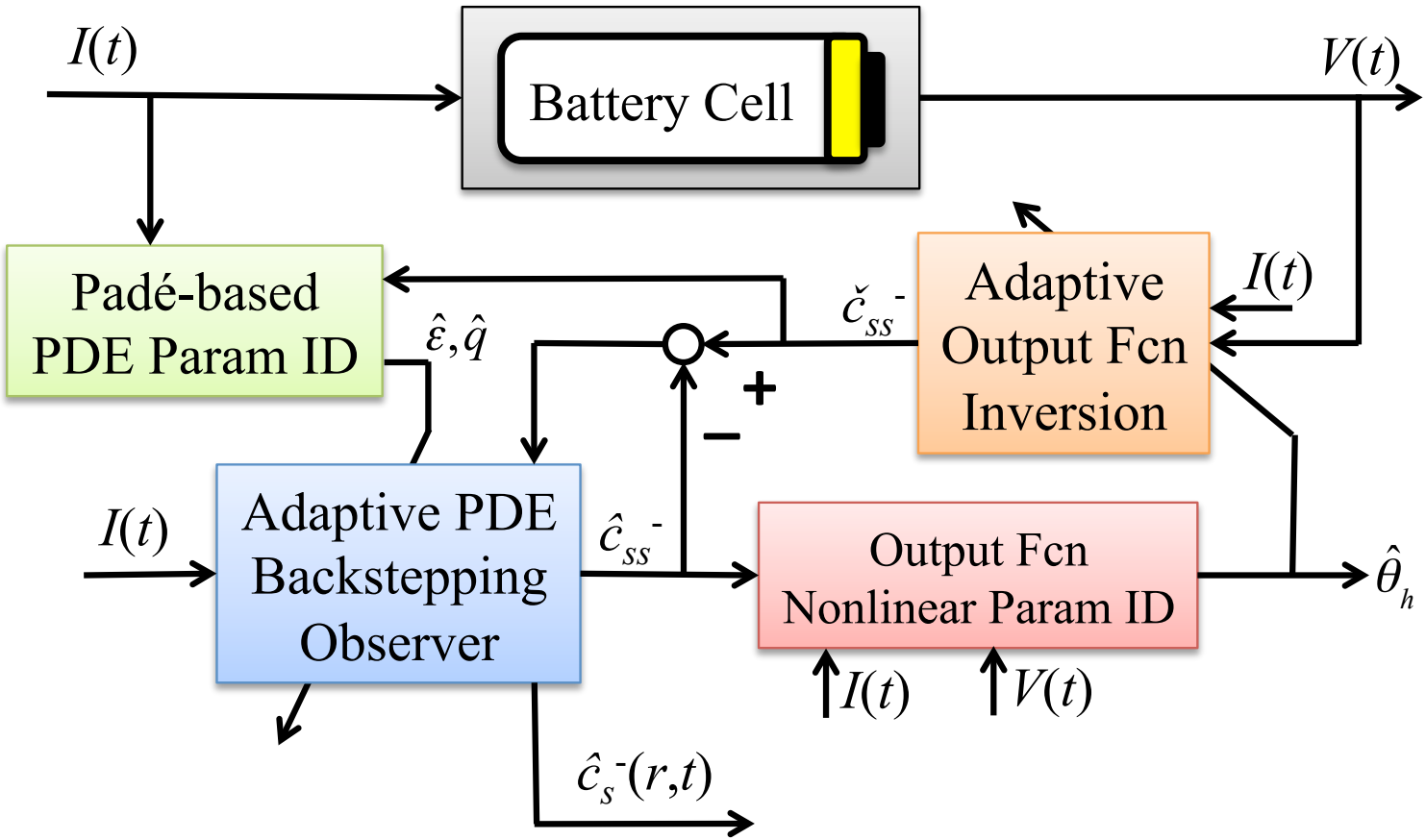
- Approximate PDE transfer function via Padé representation

$$\frac{c_{ss}(s)}{I(s)} = \frac{-q\rho \sinh\left(\sqrt{\frac{s}{\varepsilon}}\right)}{\left(\sqrt{\frac{s}{\varepsilon}}\right)\cosh\left(\sqrt{\frac{s}{\varepsilon}}\right) - \sinh\left(\sqrt{\frac{s}{\varepsilon}}\right)} \approx \frac{-3\rho q\varepsilon^2 - \frac{2}{7}\rho q\varepsilon s}{\varepsilon s + \frac{1}{35}s^2}$$

Enables the application of standard (e.g. least squares) parameter identification tools applied to vector $\theta_{pde} = [\varepsilon, q\varepsilon, q\varepsilon^2]^T$

Adaptive Observer

Combined State & Parameter Estimation



Output Function Nonlinear Parameter ID

Nonlinearly Parameterized Output

$$V(t) = h(c_{ss}^{-}(t), I(t); \theta)$$

- θ contains many parameters
- Linear dependence between parameters?

Output Function Nonlinear Parameter ID

Nonlinearly Parameterized Output

$$V(t) = h(c_{ss}^{-}(t), I(t); \theta)$$

- θ contains many parameters
- Linear dependence between parameters?

Identifiability Analysis Result

- Linearly independent parameter subset : $\theta_h = [n_{Li}, R_f]^T$
  - n_{Li} : Total amount of cyclable Li (Capacity Fade)
  - R_f : Resistance of current collectors, electrolyte, etc. (Power Fade)

Output Function Nonlinear Parameter ID

Nonlinearly Parameterized Output

$$V(t) = h(c_{ss}^{-}(t), I(t); \theta)$$

- θ contains many parameters
- Linear dependence between parameters?

Identifiability Analysis Result

- Linearly independent parameter subset : $\theta_h = [n_{Li}, R_f]^T$
  - n_{Li} : Total amount of cyclable Li (Capacity Fade)
  - R_f : Resistance of current collectors, electrolyte, etc. (Power Fade)

Enables the application of nonlinear least squares parameter identification tools applied to vector θ_h

Nonlinear Identifiability Analysis

Parameterized Output

$$V(t) = h(t, c_{ss}^{-}(t); \theta)$$

$$\theta = \left[n_{Li}, \frac{1}{a^{+} AL^{+} k^{+} \sqrt{c_e^0}}, \frac{1}{a^{-} AL^{-} k^{-} \sqrt{c_e^0}}, R_f \right]^T$$

- Linear dependence between parameters?

Parameter Sensitivity

$$S = \frac{\partial h}{\partial \theta} \qquad S \in R^{n_T \times 4}$$

$$S = [S_1, S_2, S_3, S_4]^T$$

- A particular decomposition of $S^T S$ reveals linear dependence between parameters!

Nonlinear Identifiability Analysis

Decomposition of $S^T S = D^T C D$

$$D = \text{diag}(\|S_1\|, \|S_2\|, \|S_3\|, \|S_4\|)$$

$$C = \begin{bmatrix} 1 & \frac{\langle S_1, S_2 \rangle}{\|S_1\|\|S_2\|} & \frac{\langle S_1, S_3 \rangle}{\|S_1\|\|S_3\|} & \frac{\langle S_1, S_4 \rangle}{\|S_1\|\|S_4\|} \\ \frac{\langle S_2, S_1 \rangle}{\|S_2\|\|S_1\|} & 1 & \frac{\langle S_2, S_3 \rangle}{\|S_2\|\|S_3\|} & \frac{\langle S_2, S_4 \rangle}{\|S_2\|\|S_4\|} \\ \frac{\langle S_3, S_1 \rangle}{\|S_3\|\|S_1\|} & \frac{\langle S_3, S_2 \rangle}{\|S_3\|\|S_2\|} & 1 & \frac{\langle S_3, S_4 \rangle}{\|S_3\|\|S_4\|} \\ \frac{\langle S_4, S_1 \rangle}{\|S_4\|\|S_1\|} & \frac{\langle S_4, S_2 \rangle}{\|S_4\|\|S_2\|} & \frac{\langle S_4, S_3 \rangle}{\|S_4\|\|S_3\|} & 1 \end{bmatrix}$$

- $\frac{|\langle S_i, S_j \rangle|}{\|S_i\|\|S_j\|} \approx 1 \Rightarrow$ linear dependence
- $\frac{|\langle S_i, S_j \rangle|}{\|S_i\|\|S_j\|} \approx 0 \Rightarrow$ linear independence

Nonlinear Identifiability Analysis

Decomposition of $S^T S = D^T C D$

- $\frac{|\langle S_i, S_j \rangle|}{\|S_i\| \|S_j\|} \approx 1 \Rightarrow$ linear dependence
- $\frac{|\langle S_i, S_j \rangle|}{\|S_i\| \|S_j\|} \approx 0 \Rightarrow$ linear independence

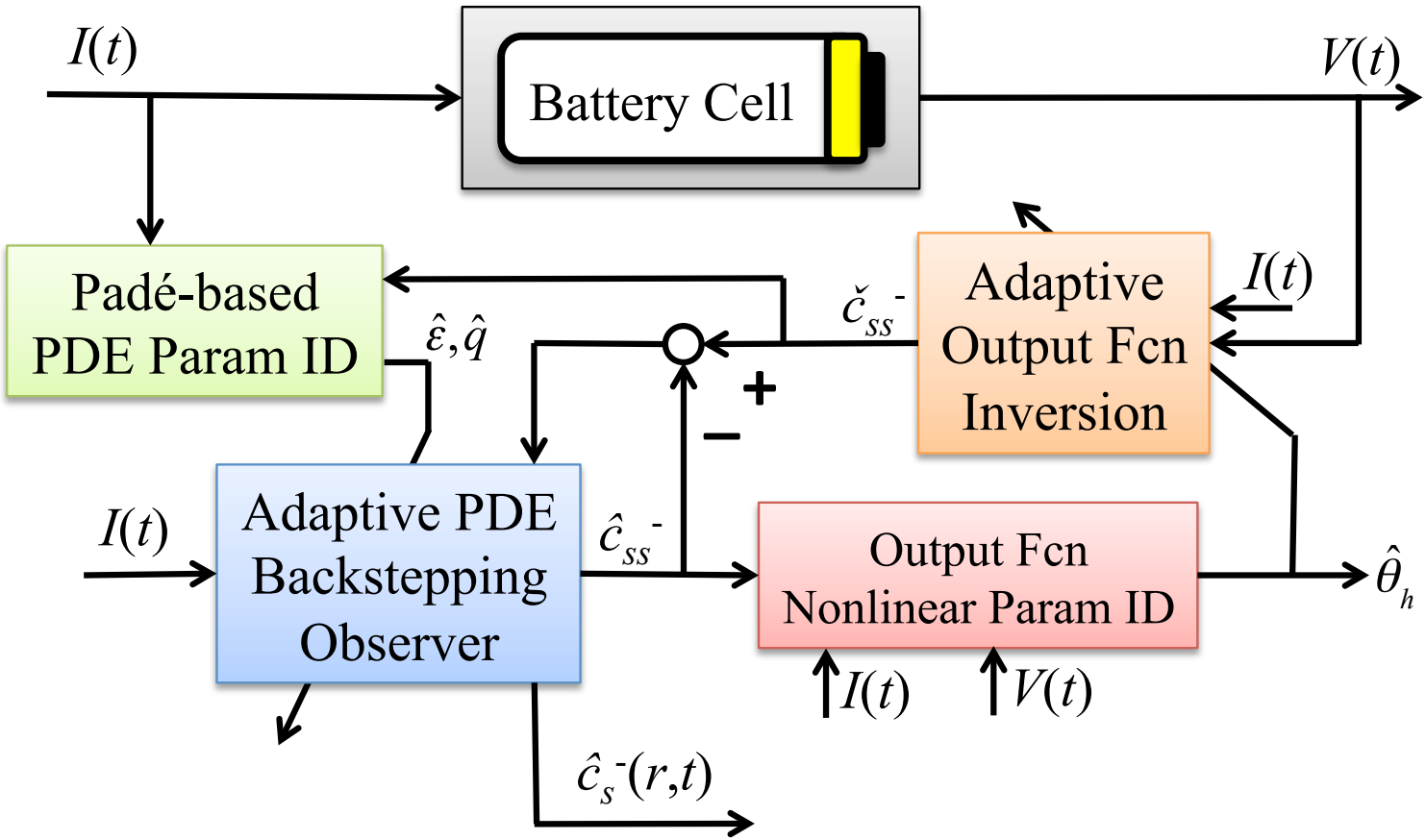
Example: UDDS Drive Cycle Applied to Battery Model

$$C = \begin{bmatrix} 1 & -0.3000 & 0.2908 & 0.2956 \\ -0.3000 & 1 & -0.9801 & -0.9805 \\ 0.2908 & -0.9801 & 1 & 0.9322 \\ 0.2956 & -0.9805 & 0.9322 & 1 \end{bmatrix}$$

- $\theta_2, \theta_3, \theta_4$ are linearly dependent
- Identify the subset $\theta_h = [\theta_1, \theta_4]^T$ via nonlinear least squares
  - $\theta_1 = n_{Li}$: Capacity Fade
  - $\theta_4 = R_f$: Power Fade

Adaptive Observer

Combined State & Parameter Estimation



Adaptive Output Function Inversion

Recall state observer requires boundary value $c_{ss}^{-}(t)$ for output error injection

Adaptive Output Function Inversion

Recall state observer requires boundary value $c_{ss}^{-}(t)$ for output error injection

Nonlinear Function Inversion

Solve $g(c_{ss}^{-}, t) = 0$ for c_{ss}^{-}, where

$$g(c_{ss}^{-}, t) = h(c_{ss}^{-}(t), I(t); \hat{\theta}_h) - V(t)$$

Adaptive Output Function Inversion

Recall state observer requires boundary value $c_{ss}^{-}(t)$ for output error injection

Nonlinear Function Inversion

Solve $g(c_{ss}^{-}, t) = 0$ for c_{ss}^{-}, where

$$g(c_{ss}^{-}, t) = h(c_{ss}^{-}(t), I(t); \hat{\theta}_h) - V(t)$$

Newton's Method

Main Idea: Construct ODE with exp. stable equilibrium $g(c_{ss}^{-}, t) = 0$

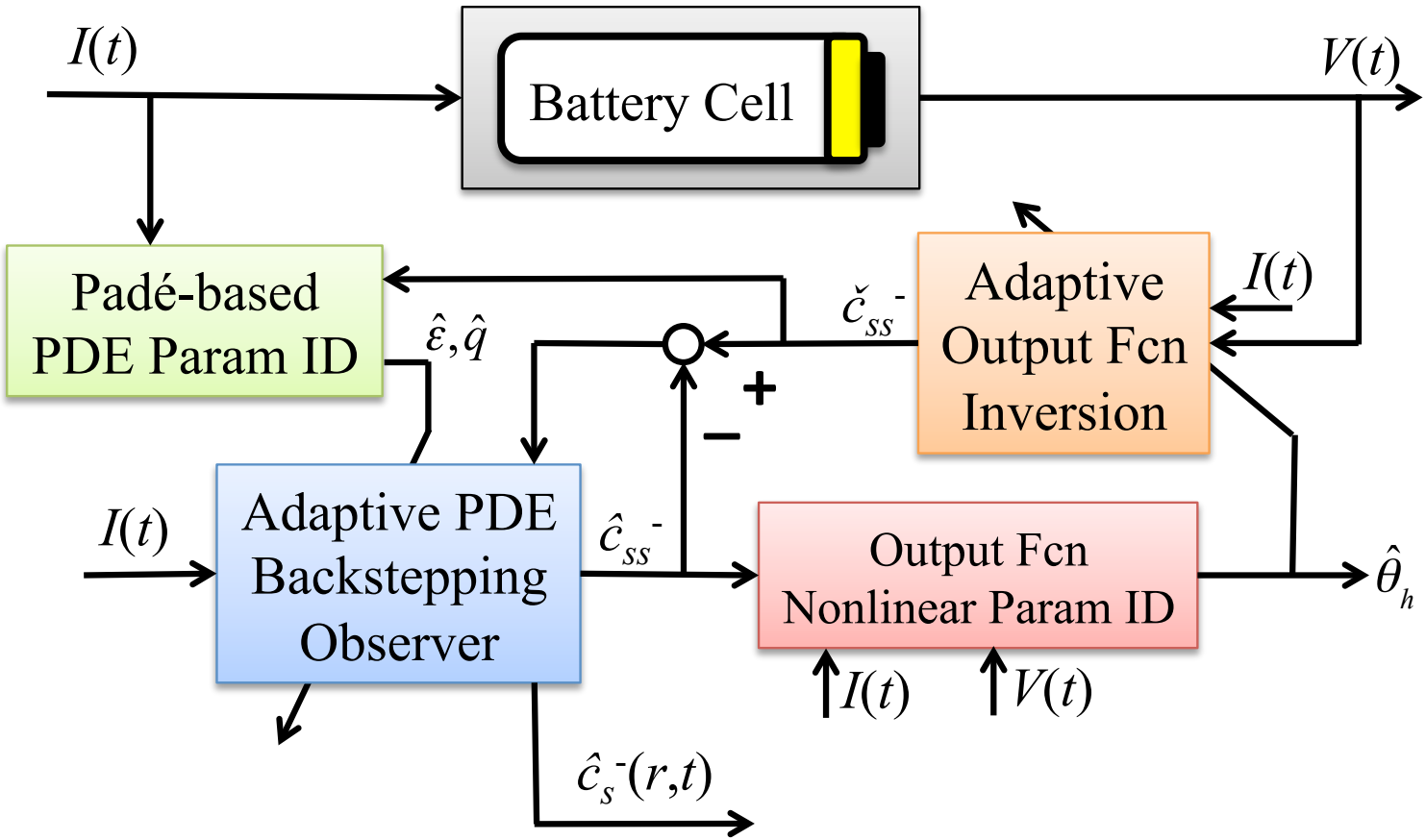
$$\frac{d}{dt}\left[g(\check{c}_{ss}^{-}, t)\right] = -\gamma g(\check{c}_{ss}^{-}, t)$$

which expands to a Newton's method update law:

$$\frac{d}{dt}\check{c}_{ss}^{-} = -\frac{\gamma g(\check{c}_{ss}^{-}, t) + \frac{\partial g}{\partial t}(\check{c}_{ss}^{-}, t)}{\frac{\partial g}{\partial c_{ss}^{-}}(\check{c}_{ss}^{-}, t)}$$

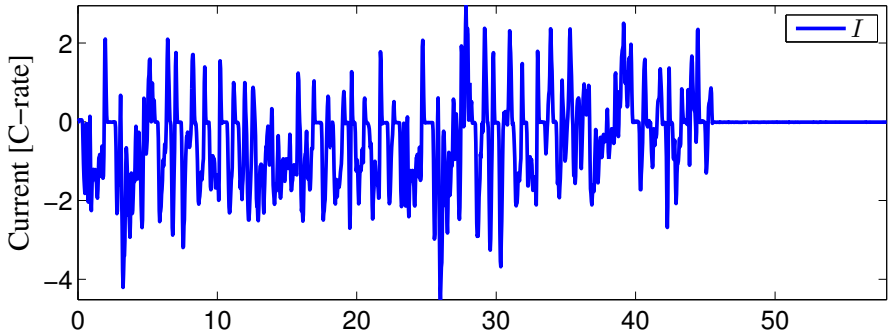
Adaptive Observer

Combined State & Parameter Estimation



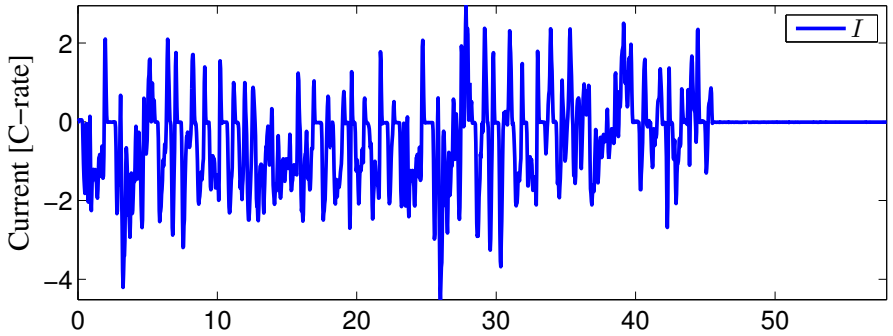
Numerical Experiments

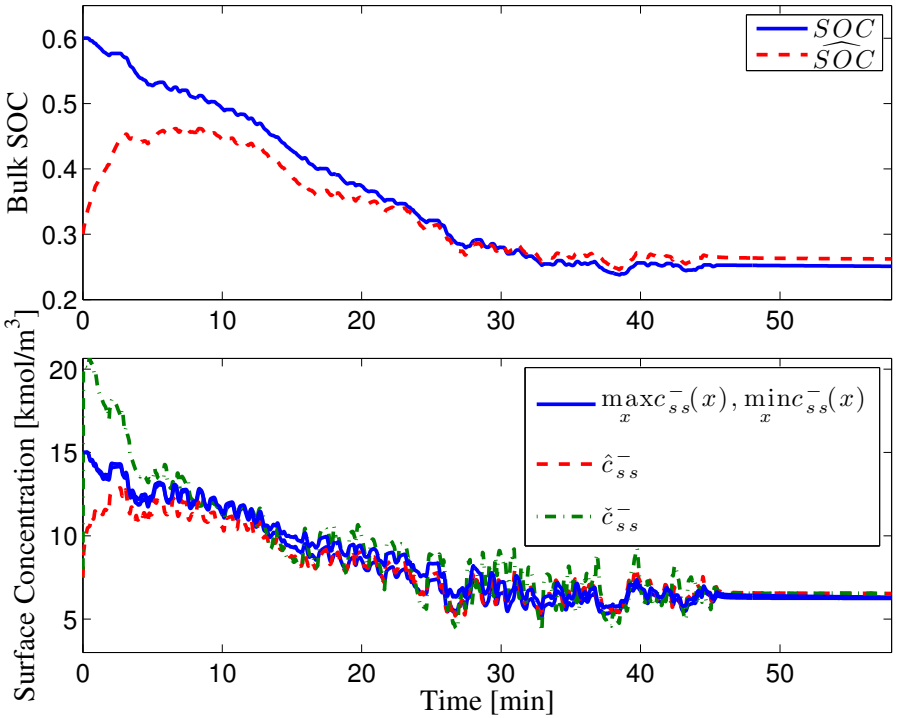
UDDS Drive Cycle Input



Numerical Experiments

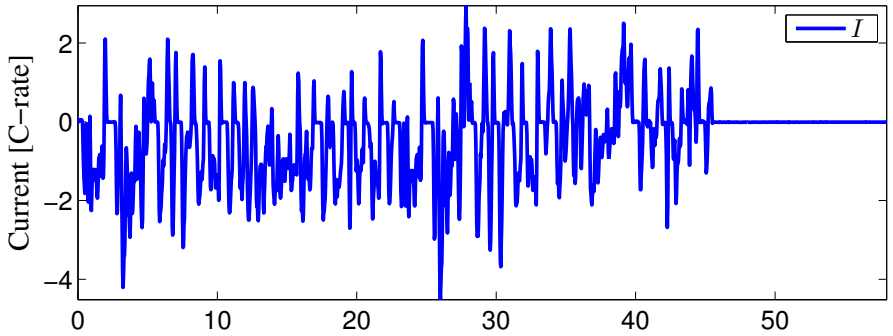
UDDS Drive Cycle Input

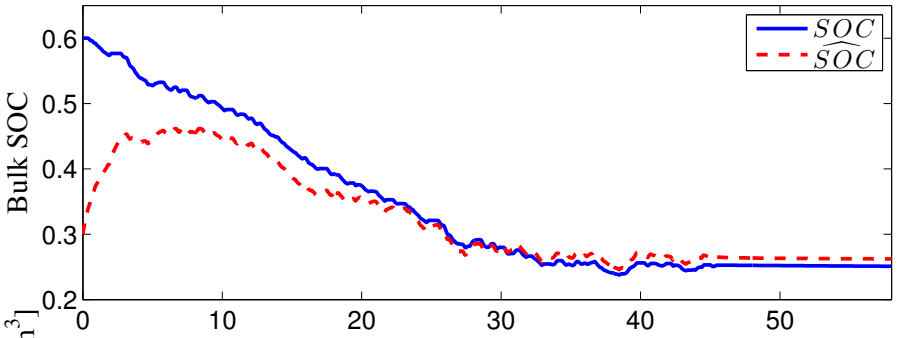


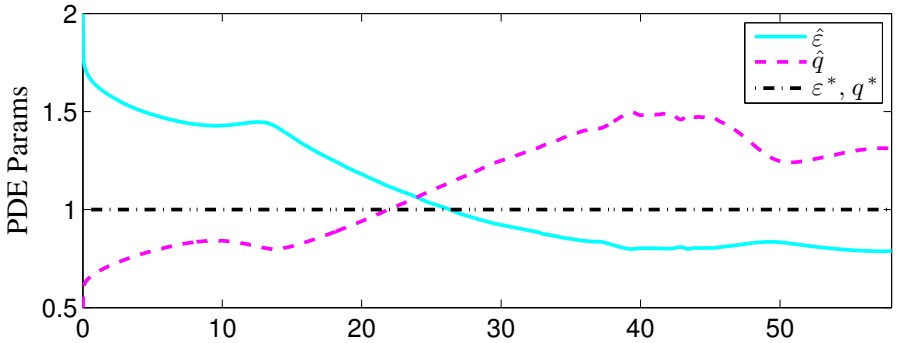


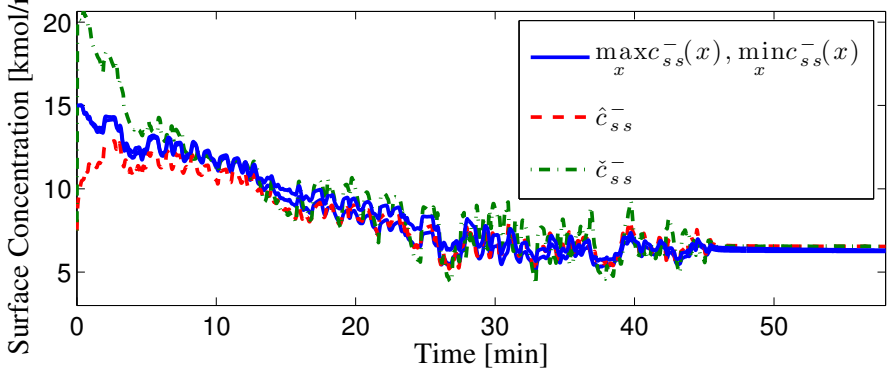
Numerical Experiments

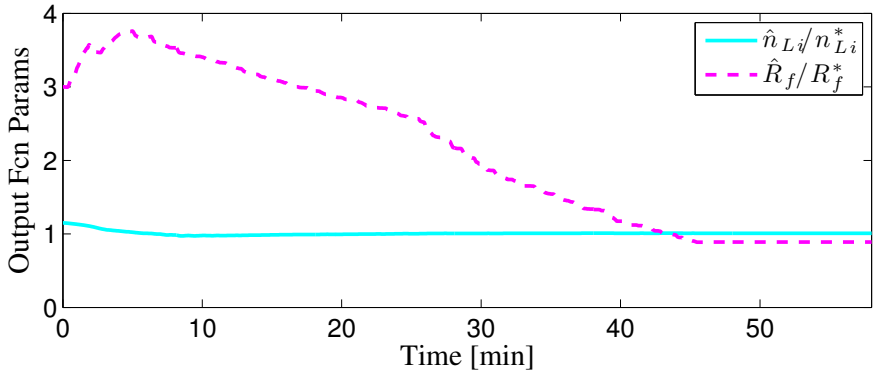
UDDS Drive Cycle Input





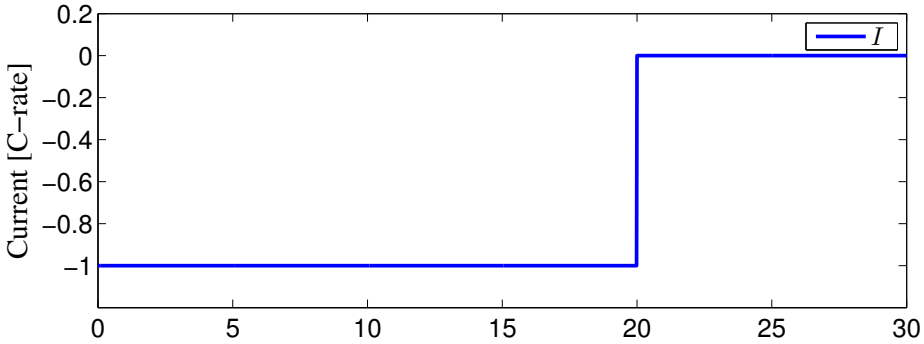


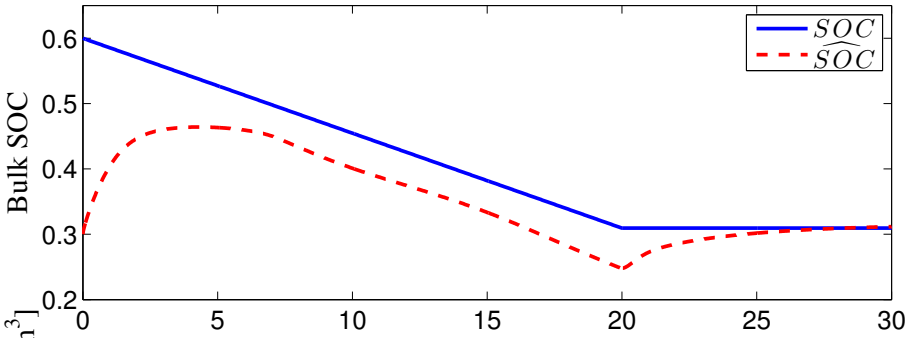


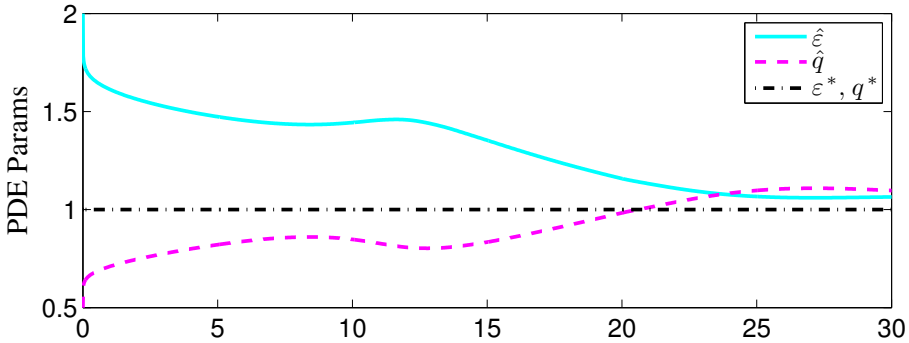


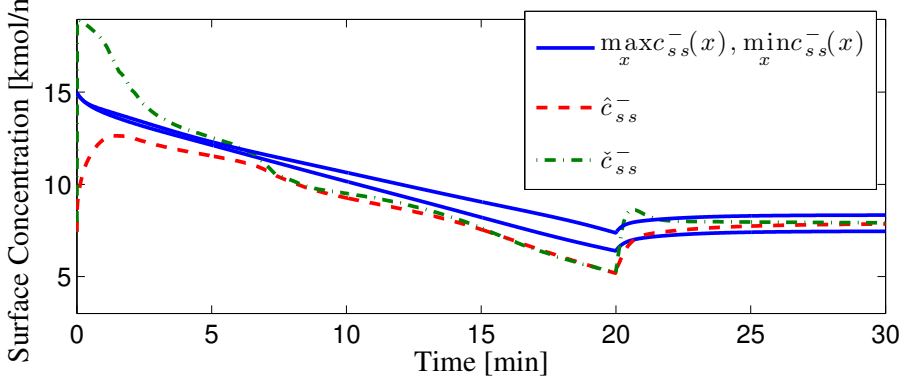
Numerical Experiments

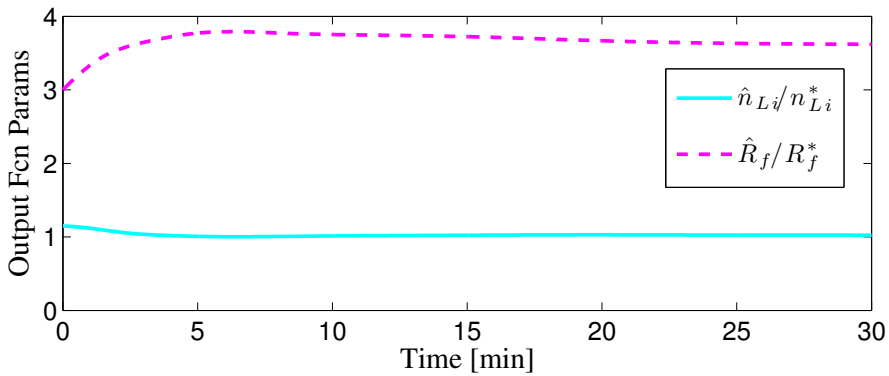
Constant 1C Discharge





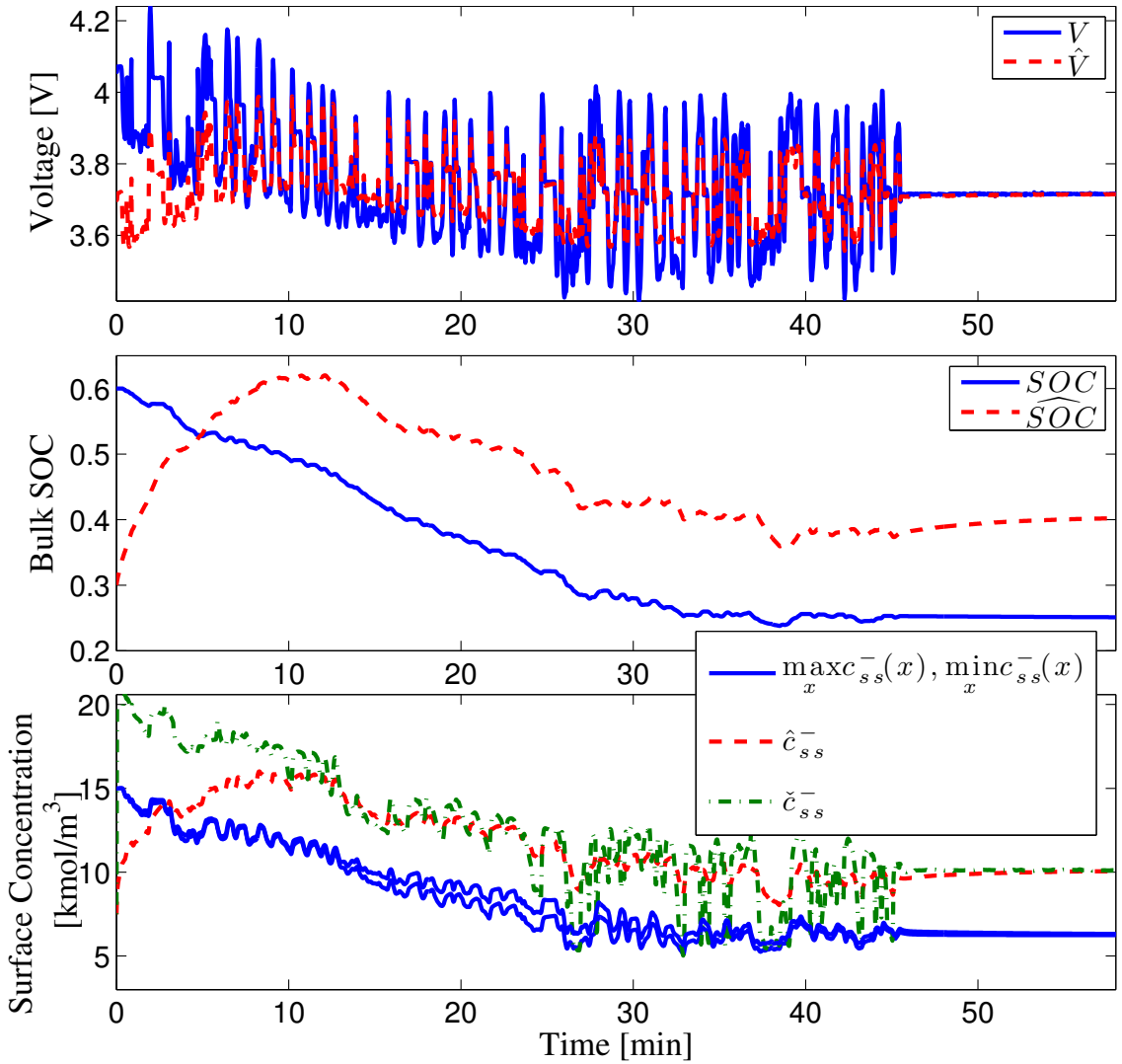






Numerical Experiments

No Parameter Adaption - Bias in State Estimates



Outline

1. Batteries
   - [Electrochemical Modeling] Incorporating Physics
   - [SOC/SOH Estimation] Looking Inside w/ Models, Meas., and Math
   - [Constrained Control] Operate at the Limits, Safely
2. Future

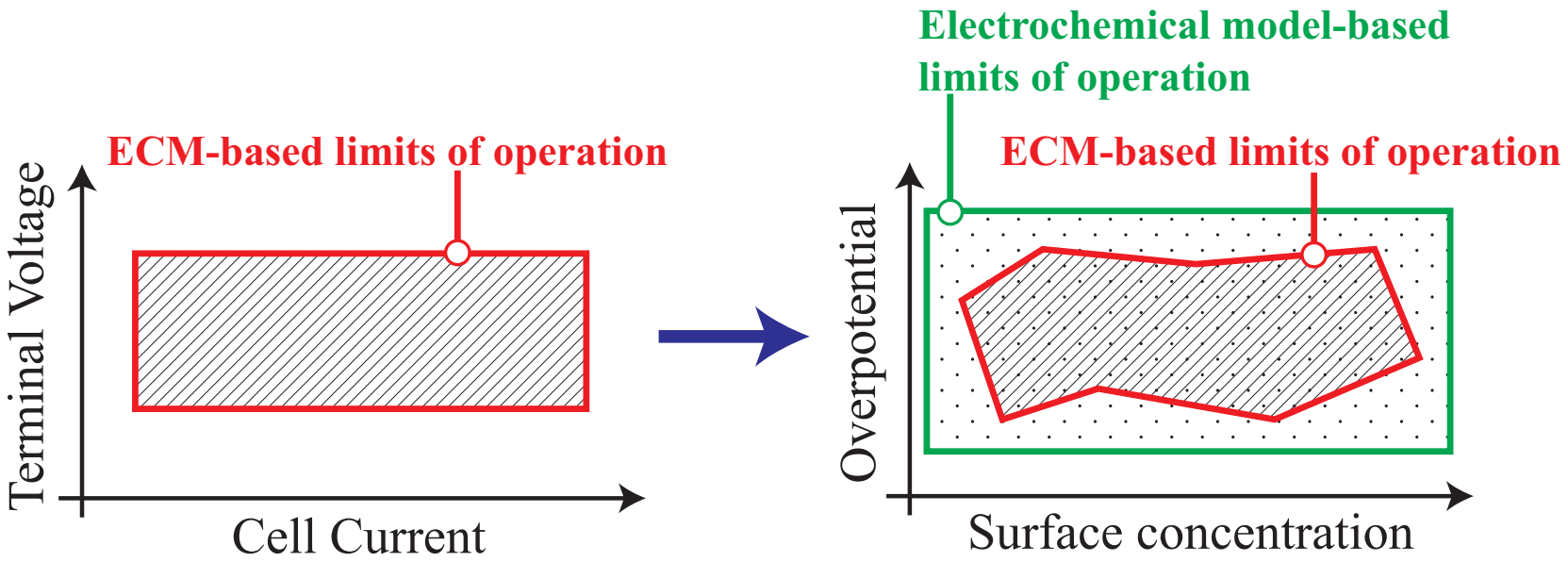
Operate Batteries at their Physical Limits



Operate Batteries at their Physical Limits

Problem Statement

Given accurate state estimates, govern the electric current such that safe operating constraints are satisfied.

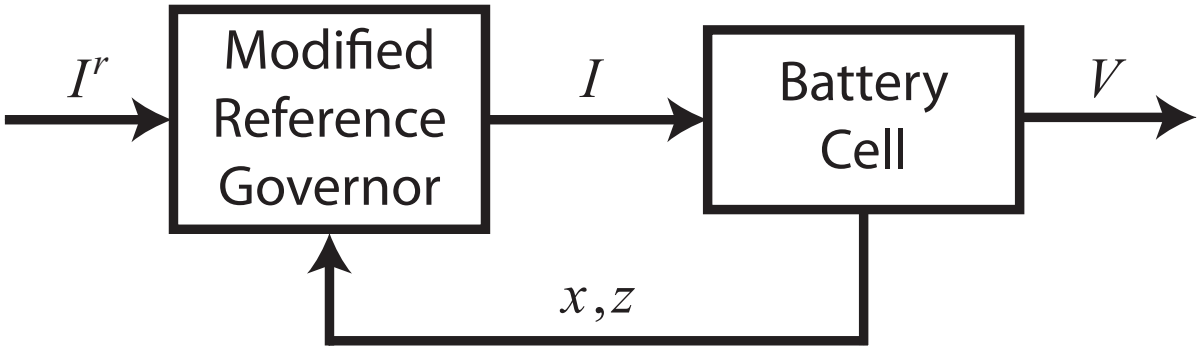


Constraints

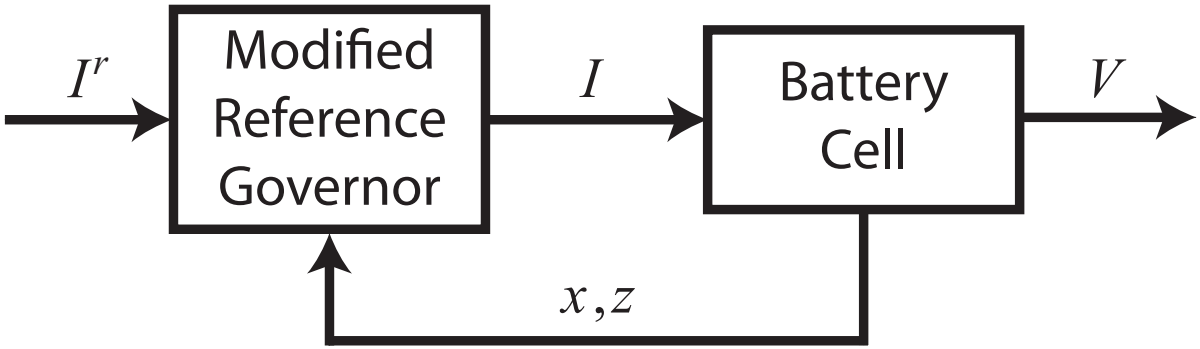
Variable	Definition	Constraint
$I(t)$	Current	Power electronics limits
$c_s^{\pm}(x,r,t)$	Li concentration in solid	Saturation/depletion
$\frac{\partial c_s^{\pm}}{\partial r}(x,r,t)$	Li concentration gradient	Diffusion-induced stress
$c_e(x,t)$	Li concentration in electrolyte	Saturation/depletion
$T(t)$	Temperature	High/low temps accel. aging
$\eta_s(x,t)$	Side-rxn overpotential	Li plating, dendrite formation

Each variable, y, must satisfy $y_{\min} \leq y \leq y_{\max}$.

Modified Reference Governor (MRG)



Modified Reference Governor (MRG)

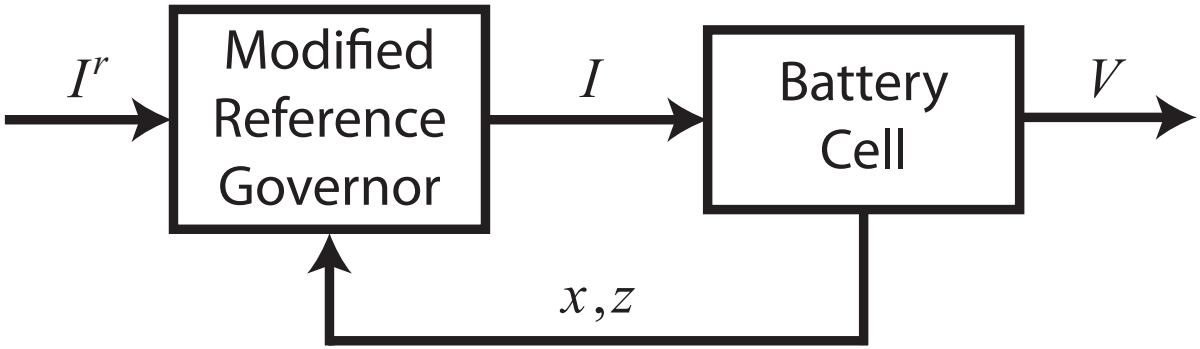


MRG Equations

$$I[k+1] = \beta^*[k] I^r[k], \qquad \beta^* \in [0,1],$$

$$\beta^*[k] = \max\{\beta \in [0,1] : (x(t), z(t)) \in \mathcal{O}\}$$

Modified Reference Governor (MRG)



MRG Equations

$$I[k+1] = \beta^*[k] I^r[k], \qquad \beta^* \in [0,1],$$

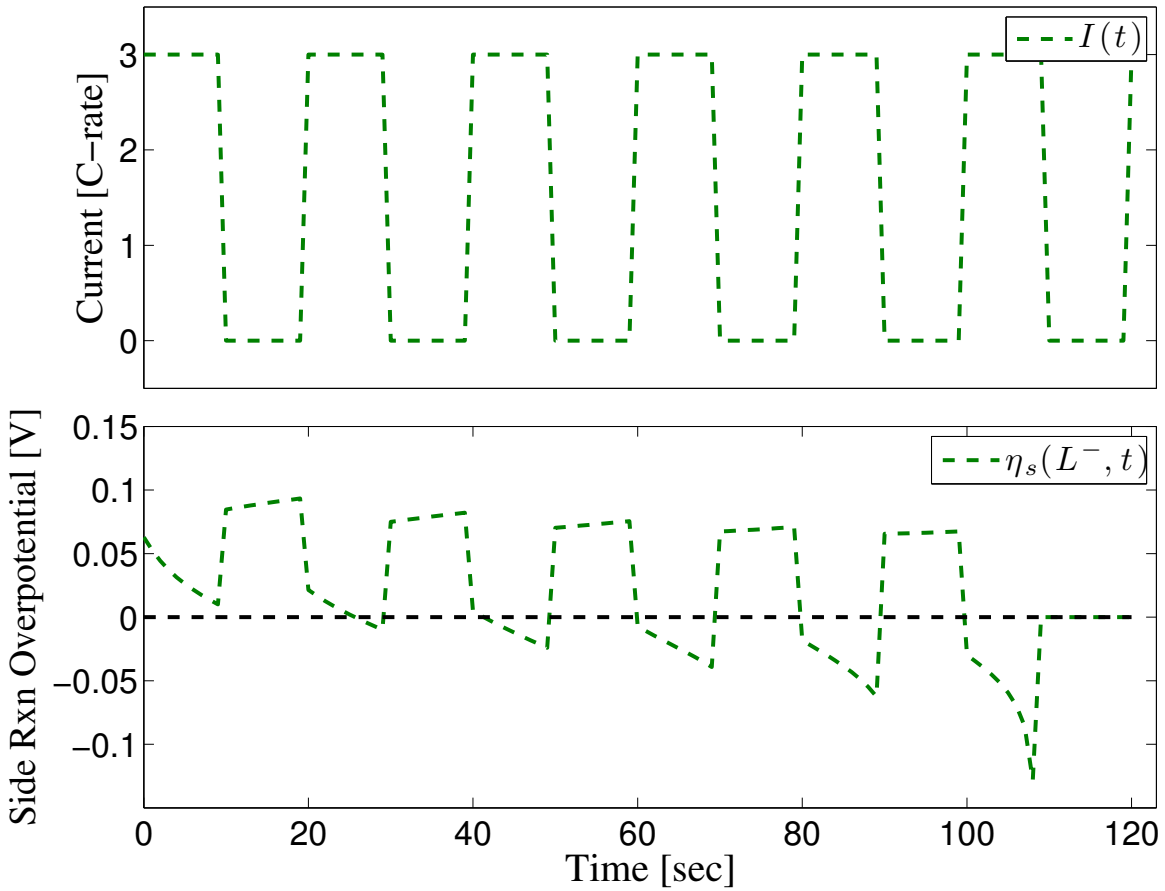
$$\beta^*[k] = \max\{\beta \in [0,1] : (x(t), z(t)) \in \mathcal{O}\}$$

Def'n: Admissible Set $\mathcal{O}$

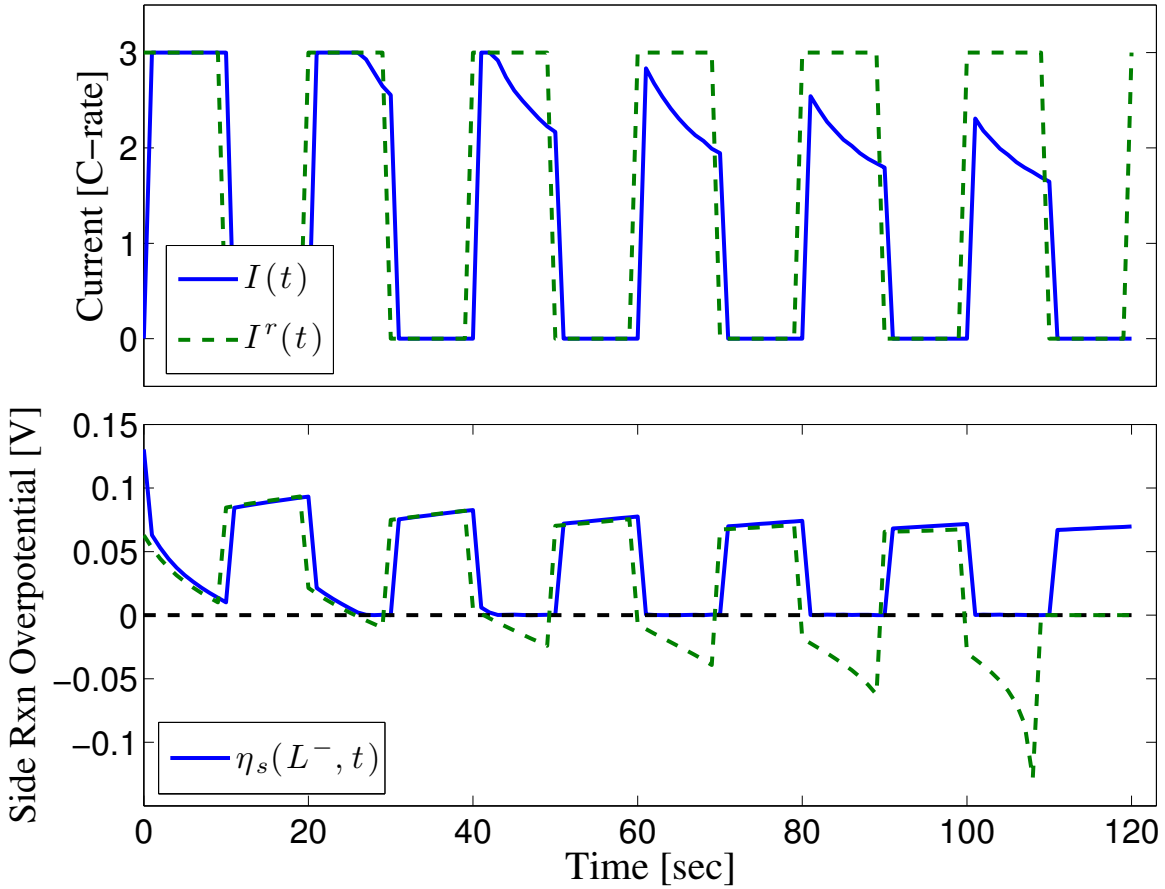
$$\mathcal{O} = \{(x(t), z(t)) : y(\tau) \in \mathcal{Y}, \forall \tau \in [t, t+T_s]\}$$

$$\begin{aligned} \dot{x}(t) &= f(x(t), z(t), \beta I^r) \\ 0 &= g(x(t), z(t), \beta I^r) \\ y(t) &= C_1 x(t) + C_2 z(t) + D \cdot \beta I^r + E \end{aligned}$$

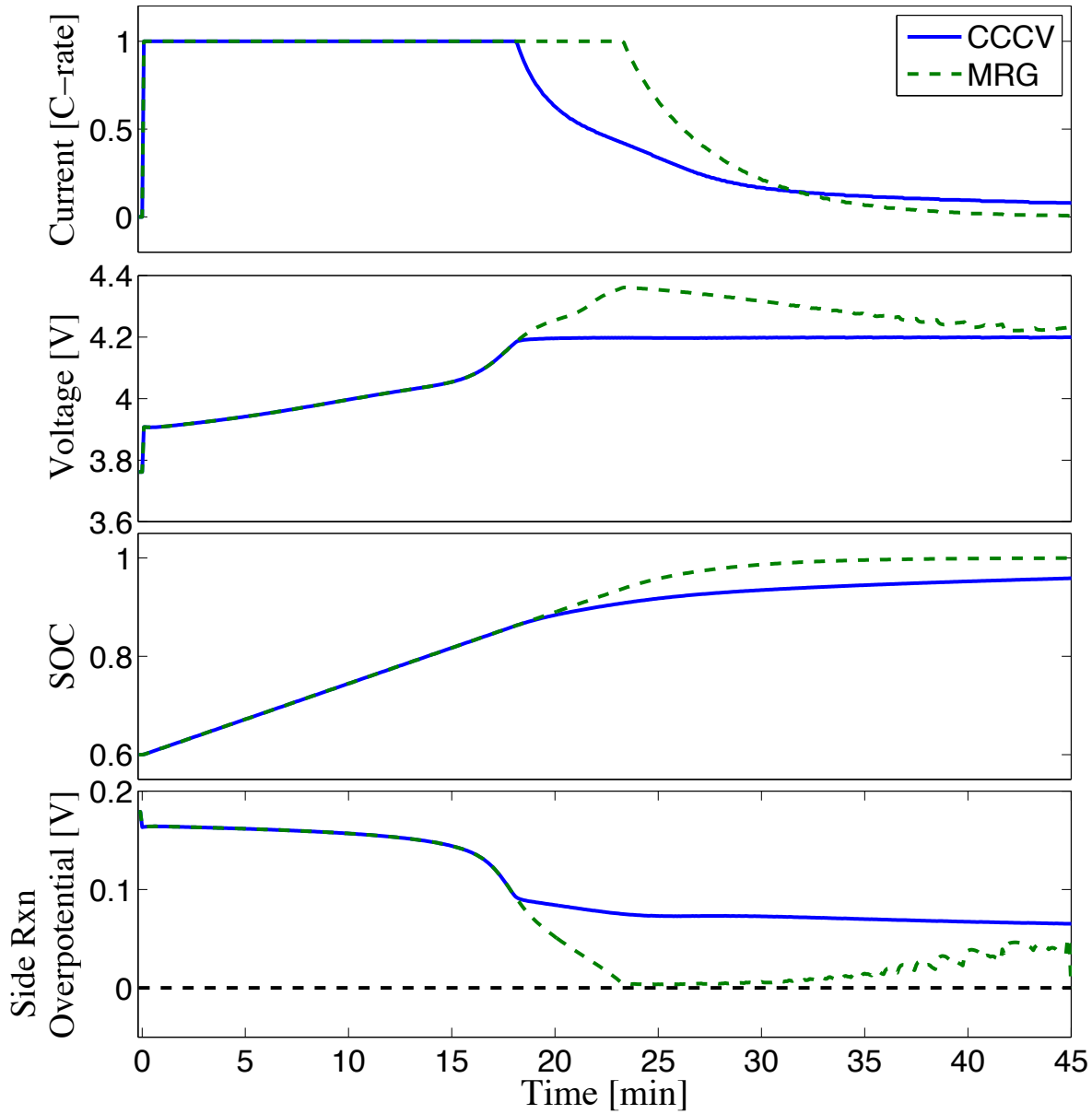
Constrained Control of EChem States



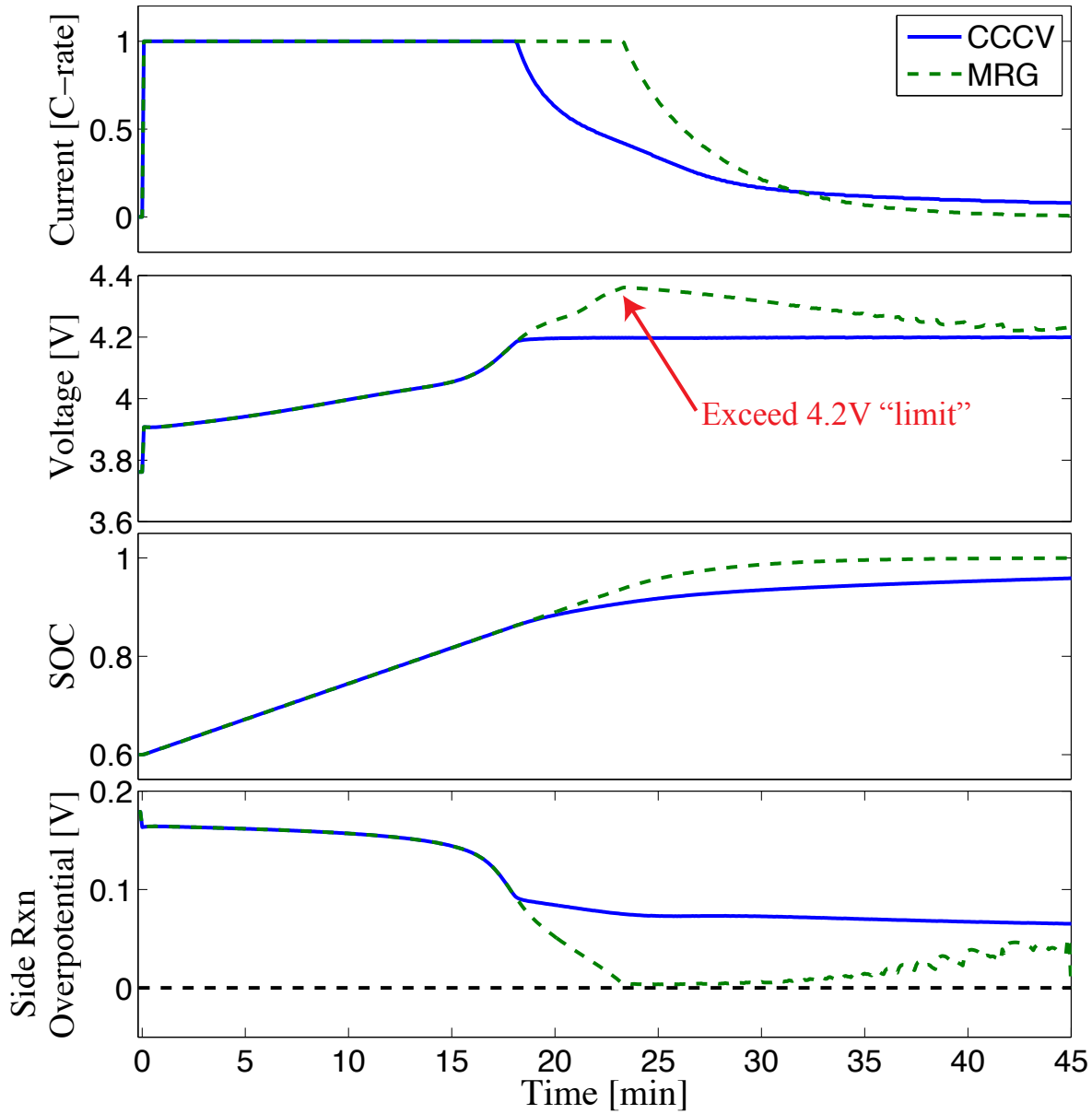
Constrained Control of EChem States



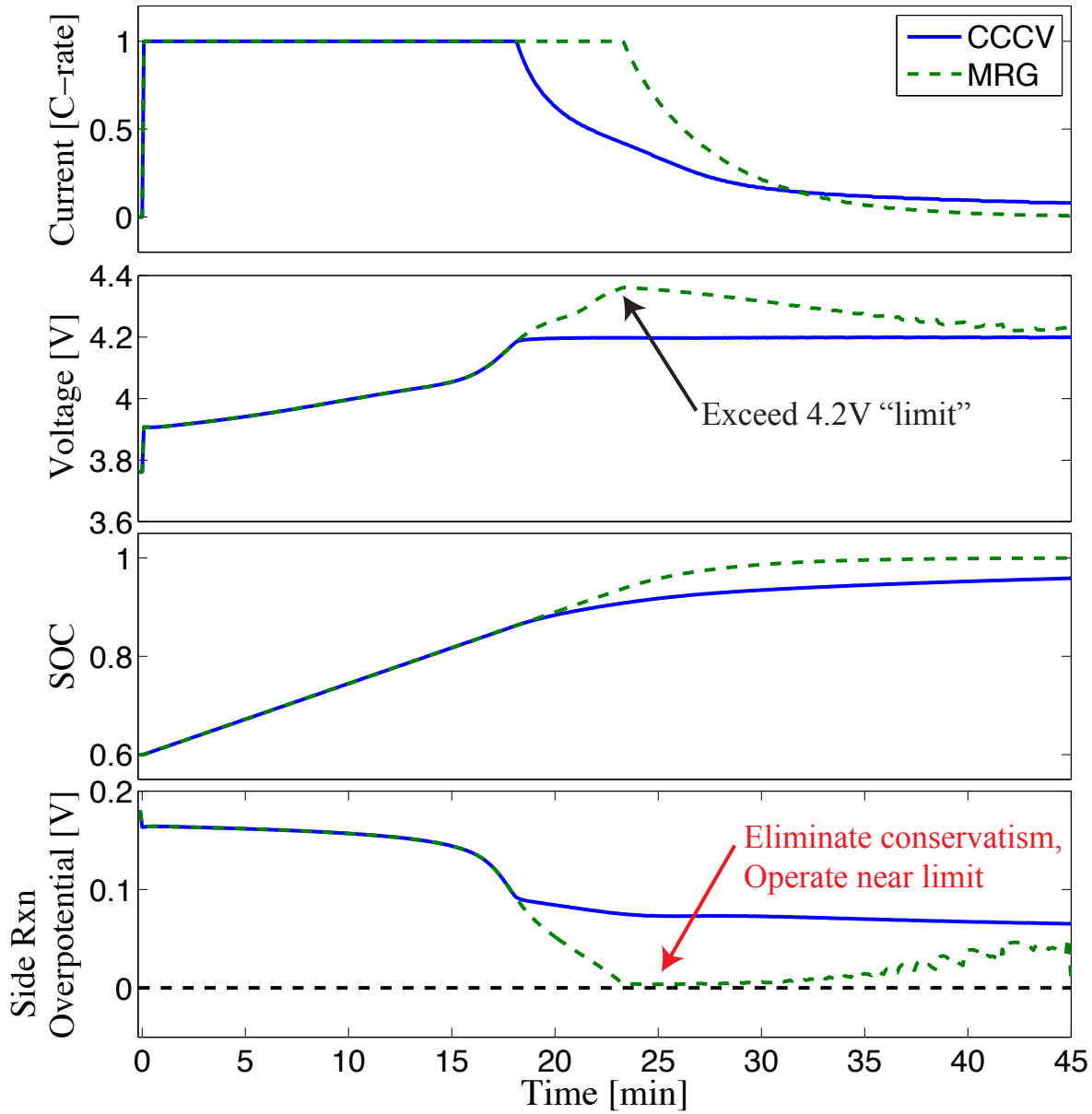
Application to Charging



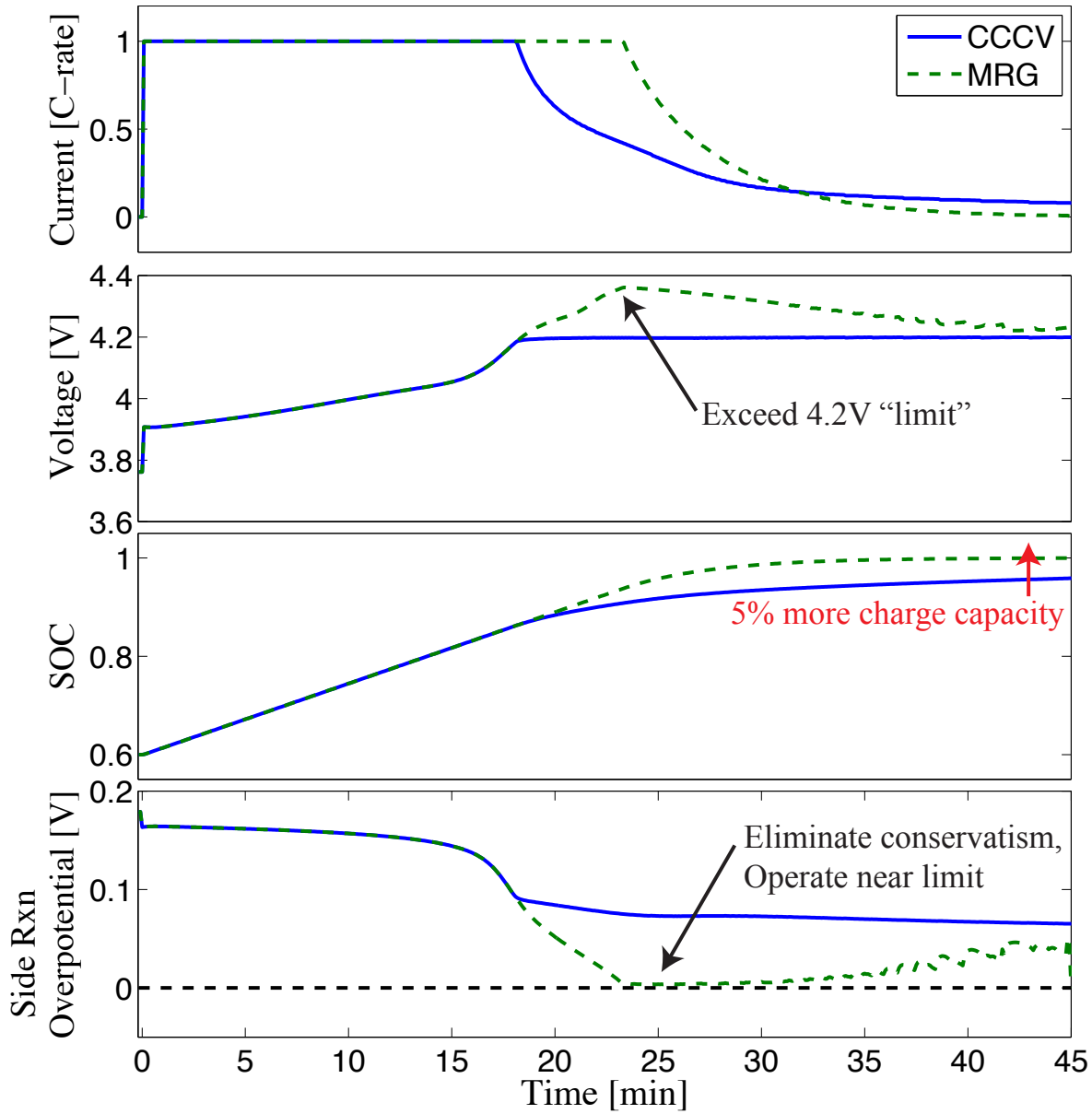
Application to Charging



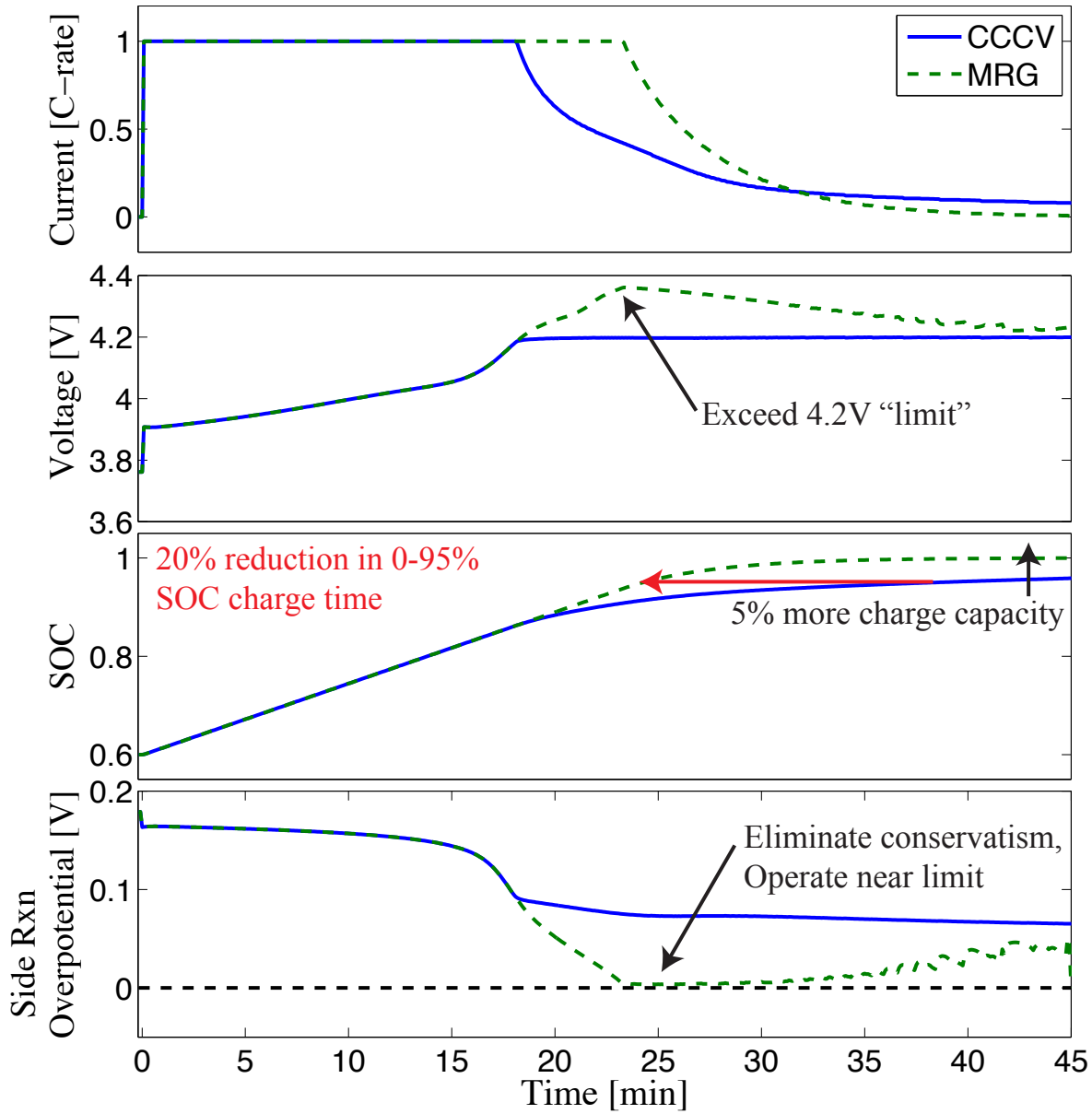
Application to Charging



Application to Charging

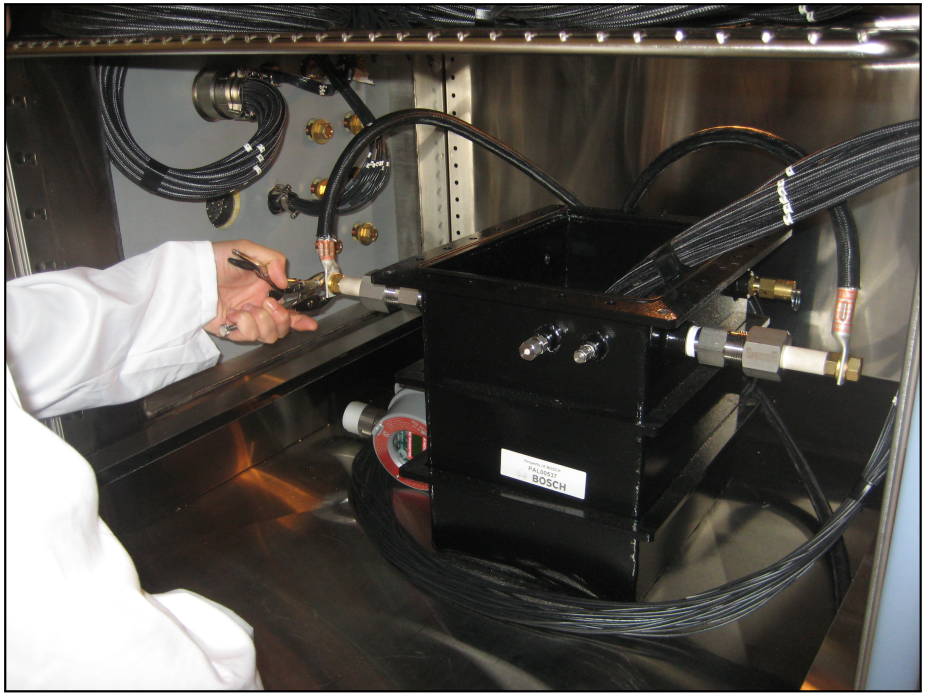


Application to Charging



Experimental Testing | ARPA-E AMPED Program



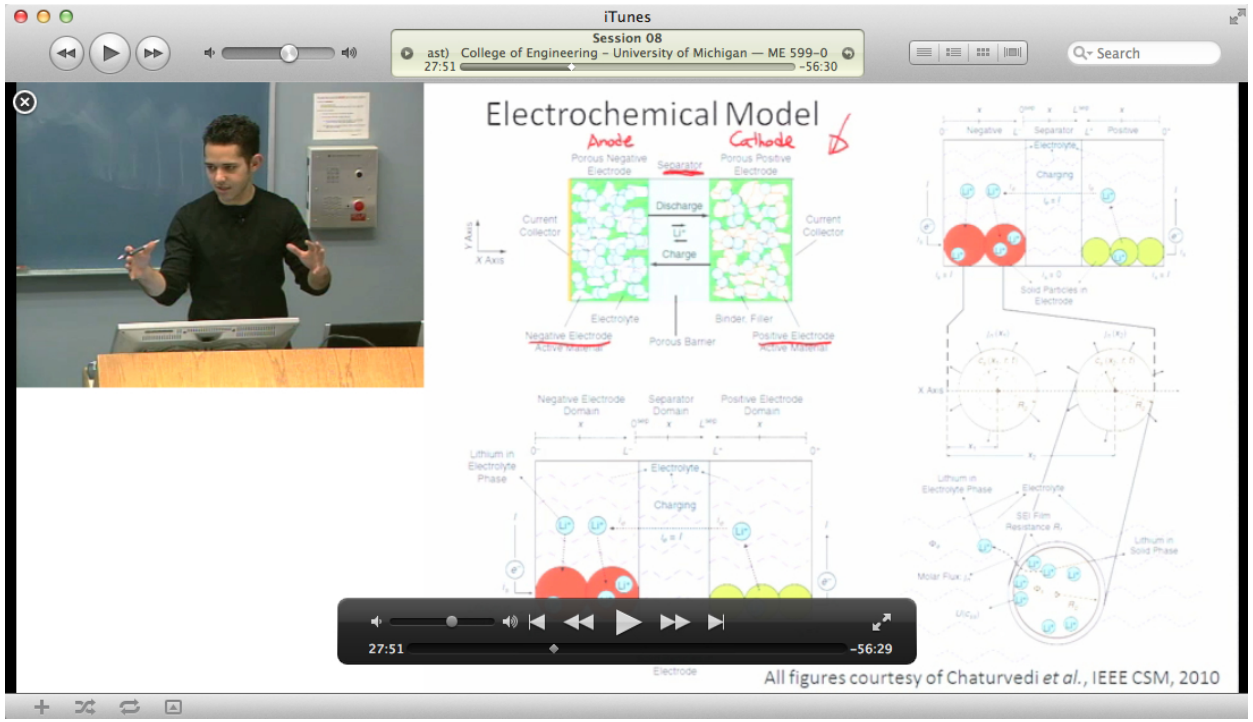


Battery Systems and Control Course

Funded by DOE-ARRA, University of Michigan

Enrollment

- Winter 2010: 59 + 5 distance
- Winter 2011: 50 + 26 distance
- ME, EE, ChemE, CS, Energy Systems, MatSci, Physics, Math
- Undergraduates
- Graduate students
- Professionals
  - Tesla Motors, General Motors, Roush, US Army



Summary of Contributions

Simultaneous SOC/SOH estimation
of physically meaningful variables via electrochemical models,
PDE estimation theory, and adaptive control.

Constrained control of batteries
via an electrochemical model
and reference governors.

Impact through education.

Outline

1. Batteries
   - [Electrochemical Modeling] Incorporating Physics
   - [SOC/SOH Estimation] Looking Inside w/ Models, Meas., and Math
   - [Constrained Control] Operate at the Limits, Safely
2. Future

Future @ UC Berkeley



Future: Battery Systems and Control

Battery Management Systems

- Increased Model Detail / Reduction
- Output Feedback Control
- Observability-based Sensor Design
- Battery Architectures

Future: Battery Systems and Control

Battery Management Systems

- Increased Model Detail / Reduction
- Output Feedback Control
- Observability-based Sensor Design
- Battery Architectures

Hybrid Energy Management

- High-energy battery / high-power ultracap
- Adaptive Algorithms
- Vehicle-to-grid Integration

Tack mina vänner!

Publications available at

http://flyingv.ucsd.edu/smoura/

smoura@ucsd.edu

Managing Overparameterization

$$\hat{\theta}_{pde} = \begin{bmatrix} \widehat{q\varepsilon^2} \\ \widehat{q\varepsilon} \\ \hat{\varepsilon} \end{bmatrix} \longrightarrow \begin{bmatrix} \hat{\varepsilon} \\ \hat{q} \end{bmatrix} = \hat{\theta}_{\varepsilon q}$$

Managing Overparameterization

$$\hat{\theta}_{pde} = \begin{bmatrix} \widehat{q\varepsilon^2} \\ \widehat{q\varepsilon} \\ \hat{\varepsilon} \end{bmatrix} \longrightarrow \begin{bmatrix} \hat{\varepsilon} \\ \hat{q} \end{bmatrix} = \hat{\theta}_{\varepsilon q}$$

$$\begin{bmatrix} 2 & 1 \\ 1 & 1 \\ 1 & 0 \end{bmatrix} \begin{bmatrix} \log \hat{\varepsilon} \\ \log \hat{q} \end{bmatrix} = \begin{bmatrix} \log\left(\hat{q\varepsilon^2}\right) \\ \log\left(\hat{q\varepsilon}\right) \\ \log\left(\hat{\varepsilon}\right) \end{bmatrix}$$

$$\begin{aligned} A_{\varepsilon q} \log(\hat{\theta}_{\varepsilon q}) &= \log(\hat{\theta}_{pde}) \\ \log(\hat{\theta}_{\varepsilon q}) &= A^{+}_{\varepsilon q} \log(\hat{\theta}_{pde}) \end{aligned}$$

Managing Overparameterization

$$\hat{\theta}_{pde} = \begin{bmatrix} \widehat{q\varepsilon^2} \\ \widehat{q\varepsilon} \\ \hat{\varepsilon} \end{bmatrix} \longrightarrow \begin{bmatrix} \hat{\varepsilon} \\ \hat{q} \end{bmatrix} = \hat{\theta}_{\varepsilon q}$$

$$\begin{bmatrix} 2 & 1 \\ 1 & 1 \\ 1 & 0 \end{bmatrix} \begin{bmatrix} \log \hat{\varepsilon} \\ \log \hat{q} \end{bmatrix} = \begin{bmatrix} \log\left(\hat{q\varepsilon^2}\right) \\ \log\left(\hat{q\varepsilon}\right) \\ \log\left(\hat{\varepsilon}\right) \end{bmatrix}$$

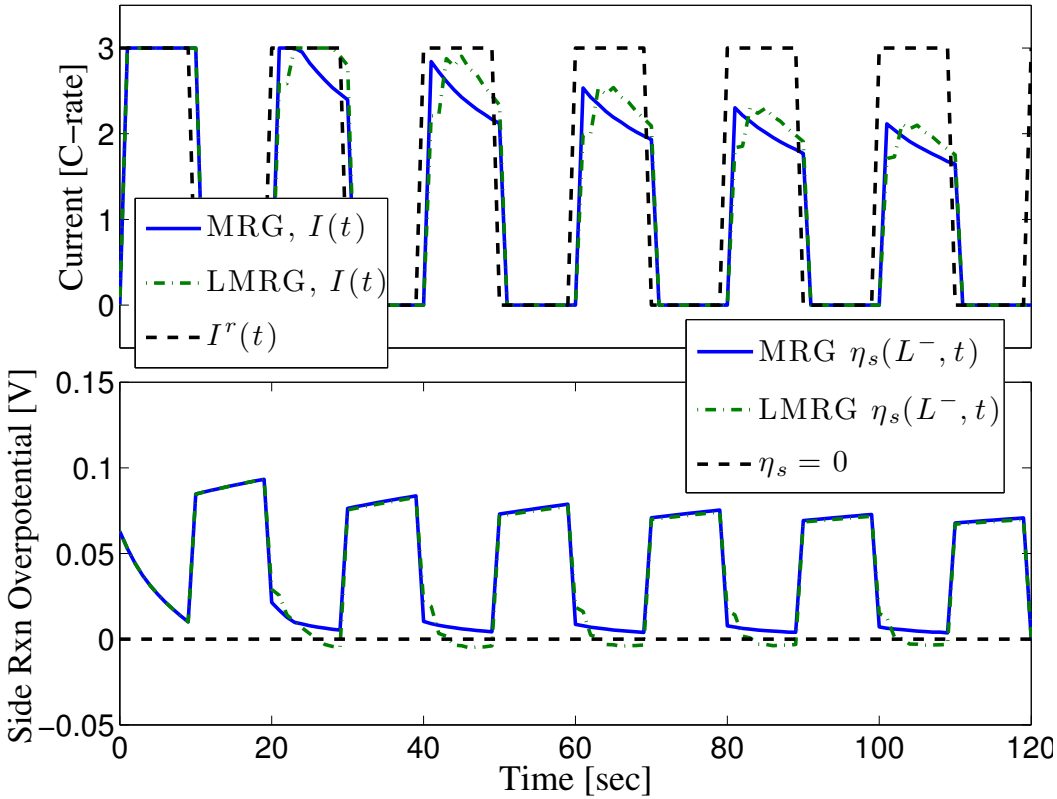
$$\begin{aligned} A_{\varepsilon q} \log(\hat{\theta}_{\varepsilon q}) &= \log(\hat{\theta}_{pde}) \\ \log(\hat{\theta}_{\varepsilon q}) &= A_{\varepsilon q}^{+} \log(\hat{\theta}_{pde}) \end{aligned}$$

Remark: $A_{\varepsilon q}^{+} = \left(A_{\varepsilon q}^{T} A_{\varepsilon q}\right)^{-1} A_{\varepsilon q}^{T}$ is the Moore-Penrose psuedoinverse of $A_{\varepsilon q}$

Linear Modified Reference Governor

Modified Reference Governor (MRG) : Simulations

Linearized MRG (LMRG) : Explicit function evaluation



PHEV Power Management

Problem Statement

Design a supervisory control algorithm for plug-in hybrid electric vehicles (PHEVs) that splits engine and battery power in some optimal sense.



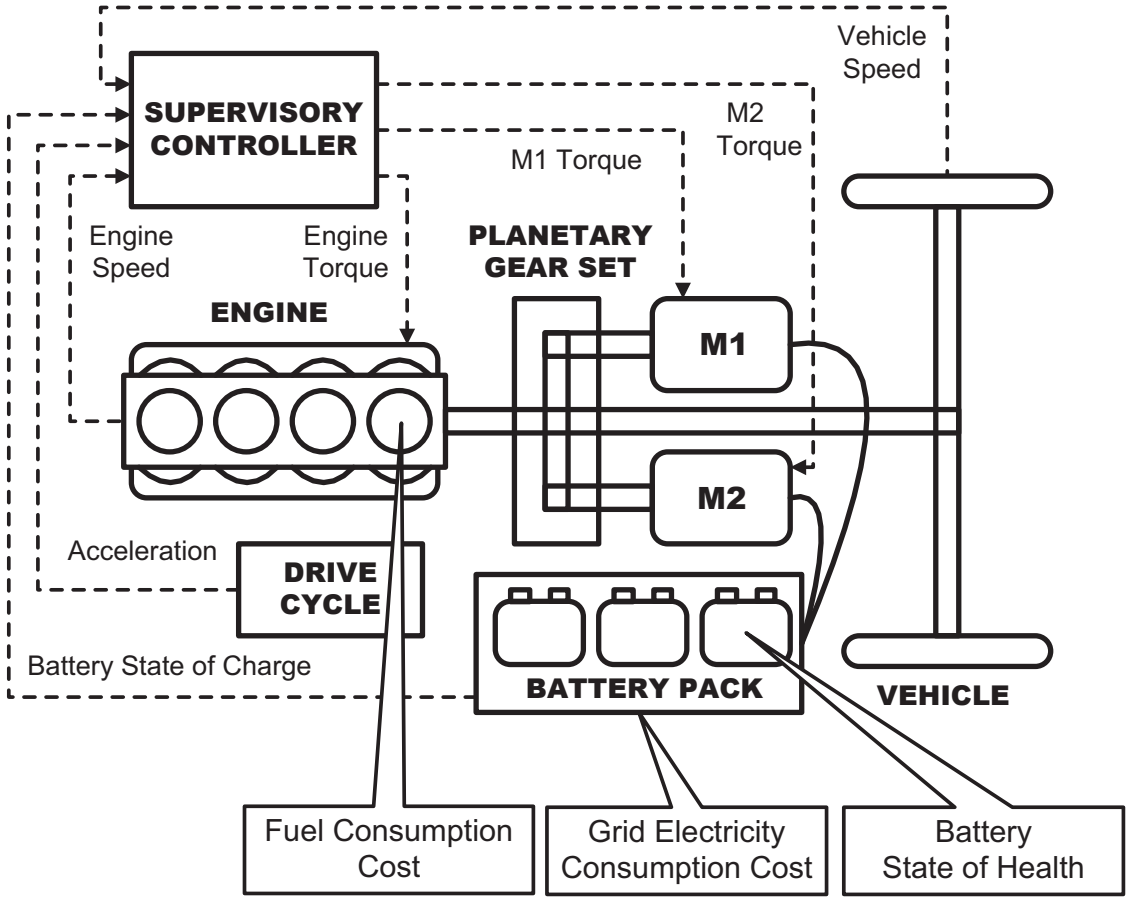
J. Voelcker, "Plugging Away in a Prius," *IEEE Spectrum*, vol. 45, pp. 30-48, 2008.



Power-Split PHEV Model

Ex: Toyota Prius, Ford Escape Hybrid

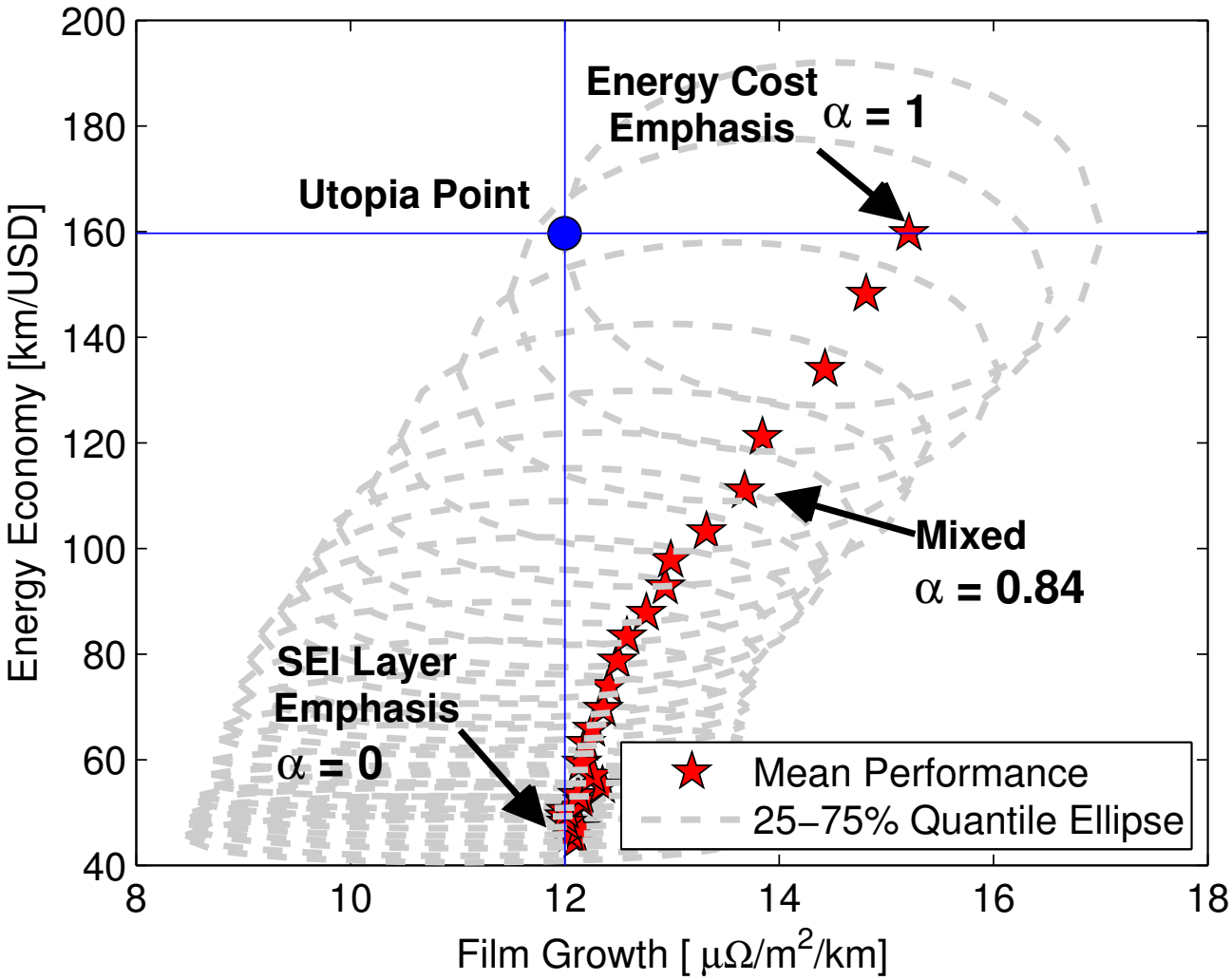
- Control Inputs
  - Engine Torque
  - M1 Torque
- State Variables
  - Engine speed
  - Vehicle speed
  - Battery SOC
  - Vehicle acceleration (Markov Chain)



Control Optimization: Minimize energy consumption cost AND battery aging

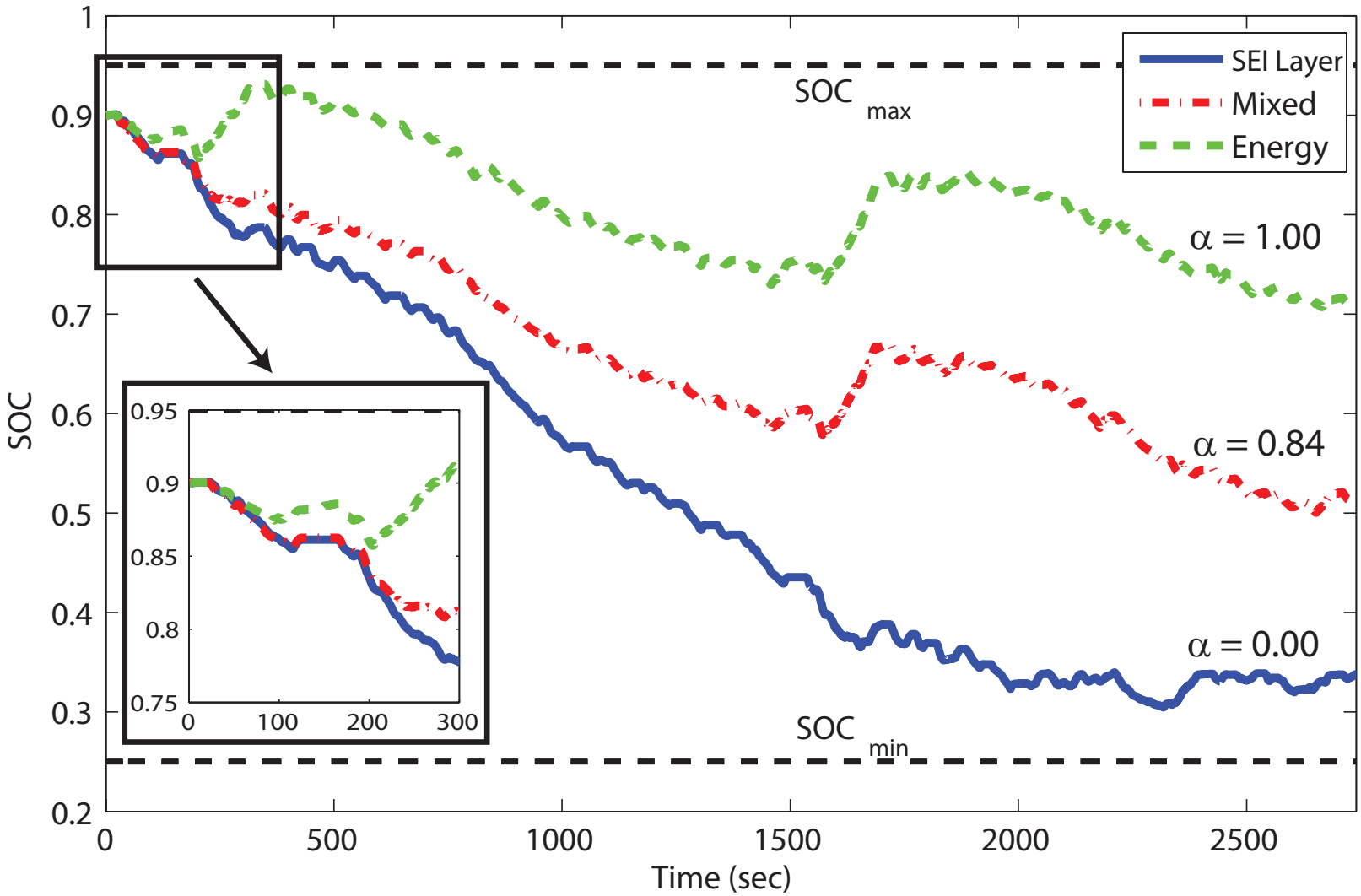
Pareto Set of Optimal Solutions

Anode-side SEI Layer Growth



SOC Trajectories

Anode-side SEI Layer Growth | UDDSx2



Energy Crisis Solutions

Energy storage	Smart Grids
(e.g., batteries)	(e.g., demand response)

Energy Crisis Solutions

Energy storage	Smart Grids
(e.g., batteries)	(e.g., demand response)

The Renewable Integration Problem

Needs: 33% renewables in CA by 2020

The Renewable Integration Problem

Needs: 33% renewables in CA by 2020

Obstacle: Must install 4 GW reserve capacity to support variability

The Renewable Integration Problem

Needs: 33% renewables in CA by 2020

Obstacle: Must install 4 GW reserve capacity to support variability

Some Interesting Facts

Thermostatically Controlled Loads (TCLs)	50% of U.S. electricity consumption is TCLs
	11% of thermostats are programmed
	Comfort is loosely coupled with control

The Renewable Integration Problem

Needs: 33% renewables in CA by 2020

Obstacle: Must install 4 GW reserve capacity to support variability

Some Interesting Facts

Thermostatically Controlled Loads (TCLs)	50% of U.S. electricity consumption is TCLs
	11% of thermostats are programmed
	Comfort is loosely coupled with control

The Punchline

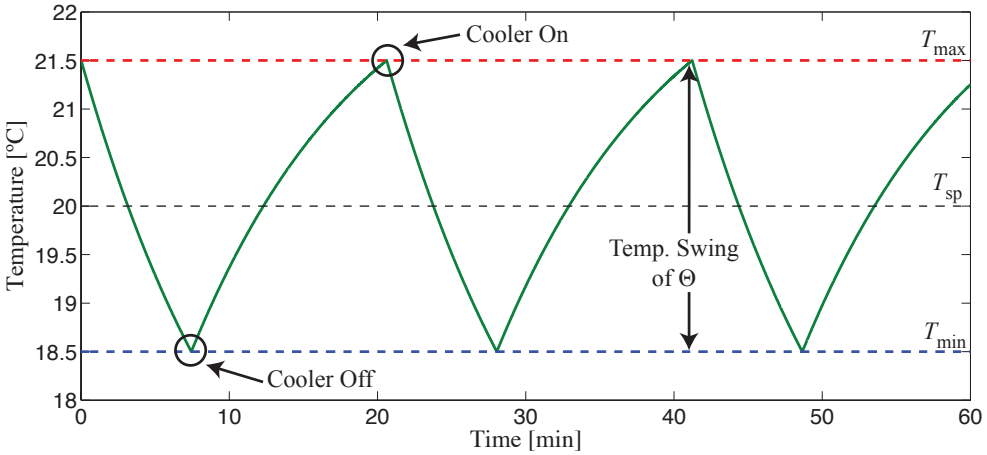
Flexible loads (e.g. TCLs) can absorb variability in renewable generation

Modeling Aggregations of TCLs

Individual TCL models

⇓

(Tens of) Thousands of hybrid ODEs

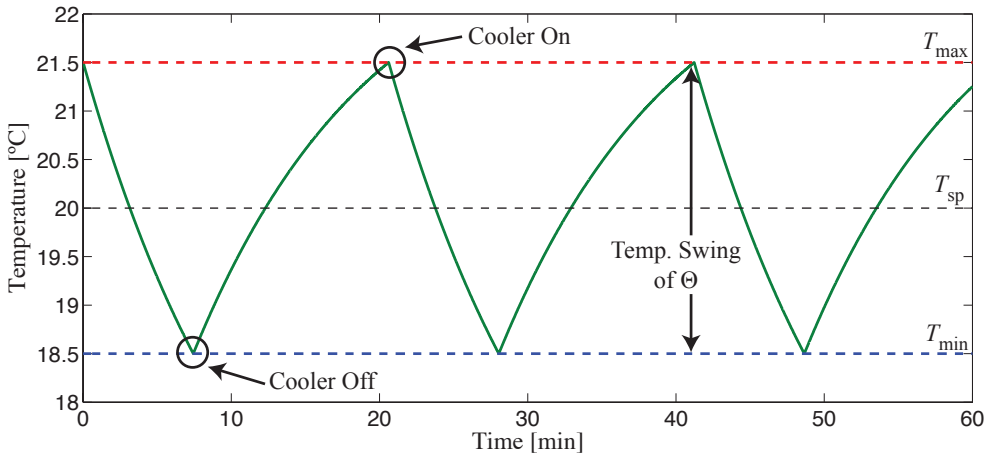


Modeling Aggregations of TCLs

Individual TCL models

⇓

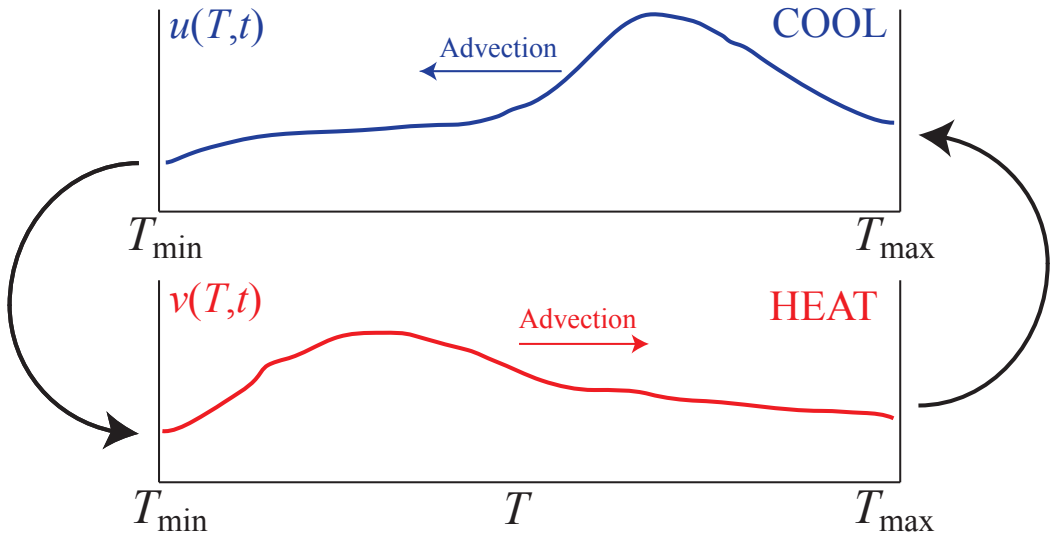
(Tens of) Thousands of hybrid ODEs



Model **aggregations** of TCLs

⇓

Two coupled linear PDEs

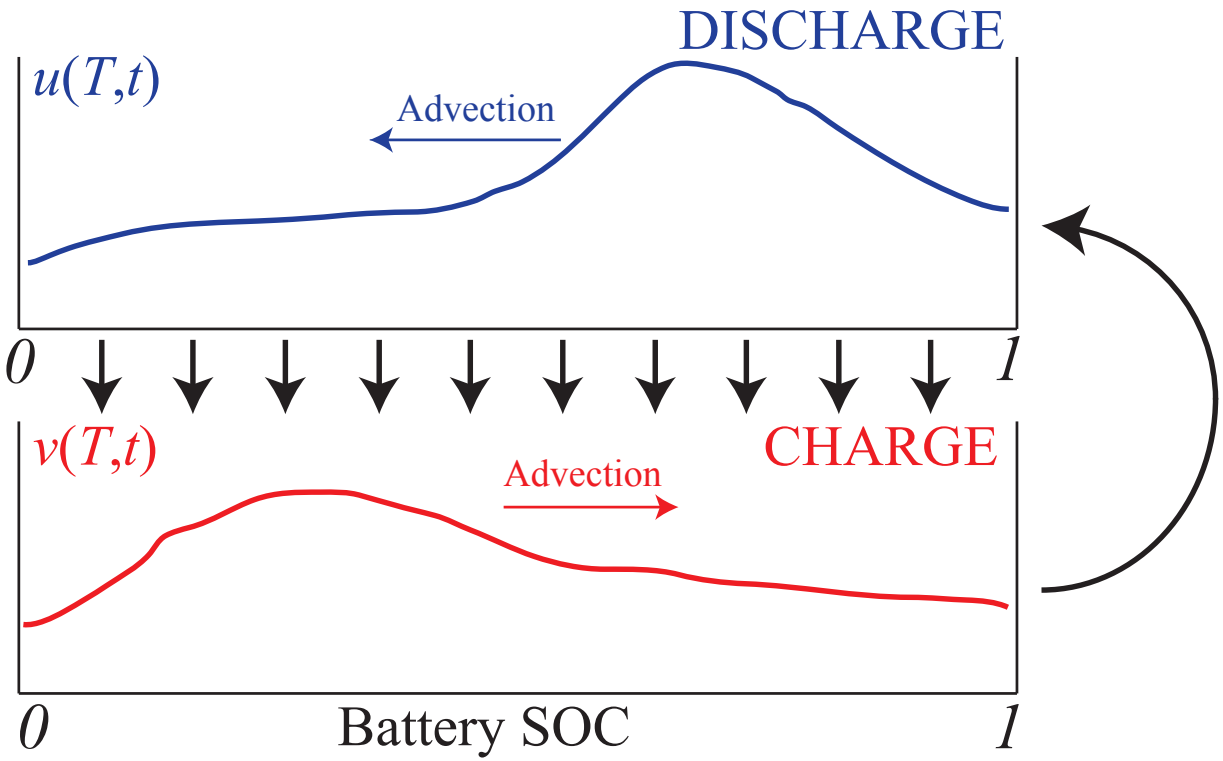


$u(T,t)$	# TCLs/°C, in COOL state, @ temp T, time t
$v(T,t)$	# TCLs/°C, in HEAT state, @ temp T, time t

Modeling Aggregated PEVs

Main Idea: Mathematically model as coupled linear PDEs

$u(T,t)$	# PEVs / SOC, in DISCHARGE state, @ SOC x, time t
$v(T,t)$	# PEVs / SOC, in CHARGE state, @ SOC x, time t



UC San Diego Campus: A Living Laboratory



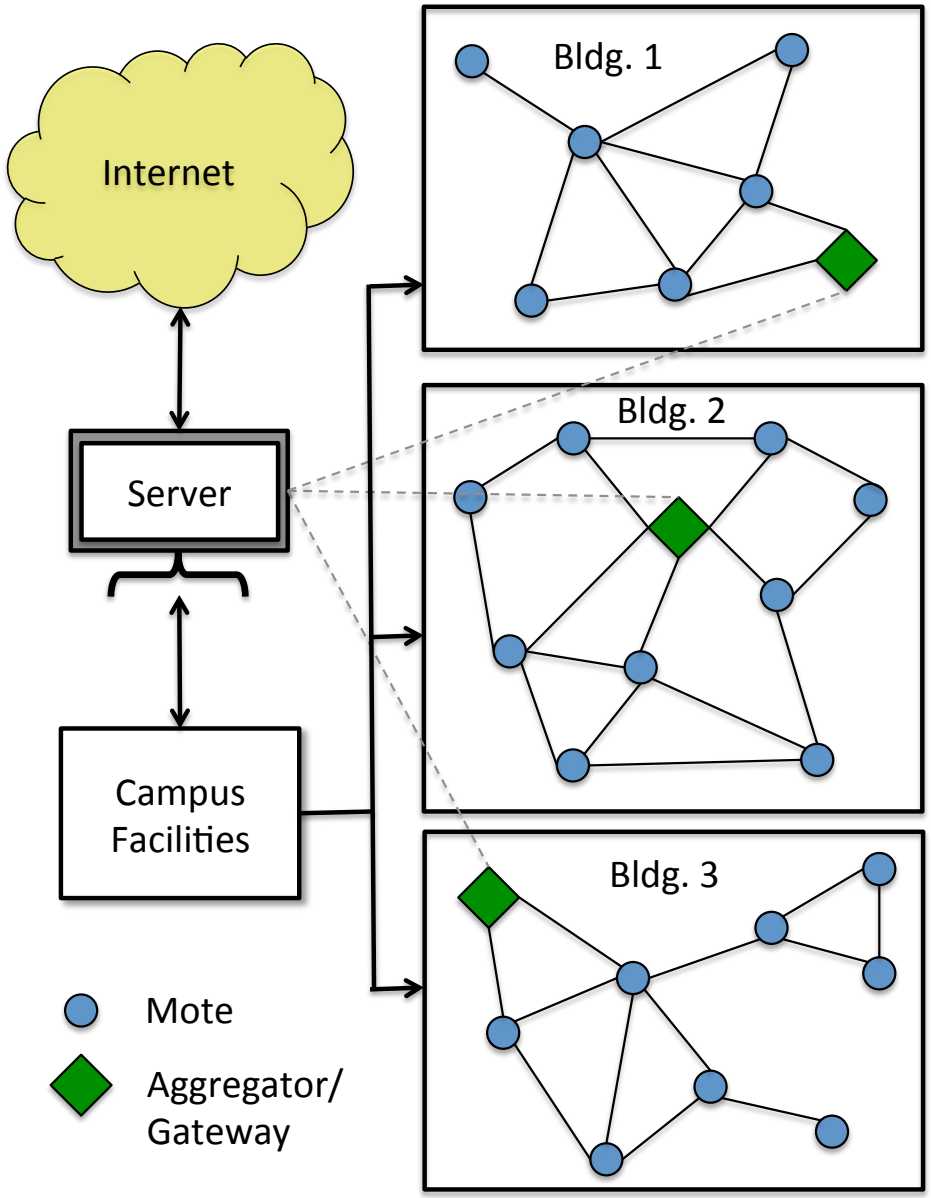
UC San Diego Campus: A Living Laboratory

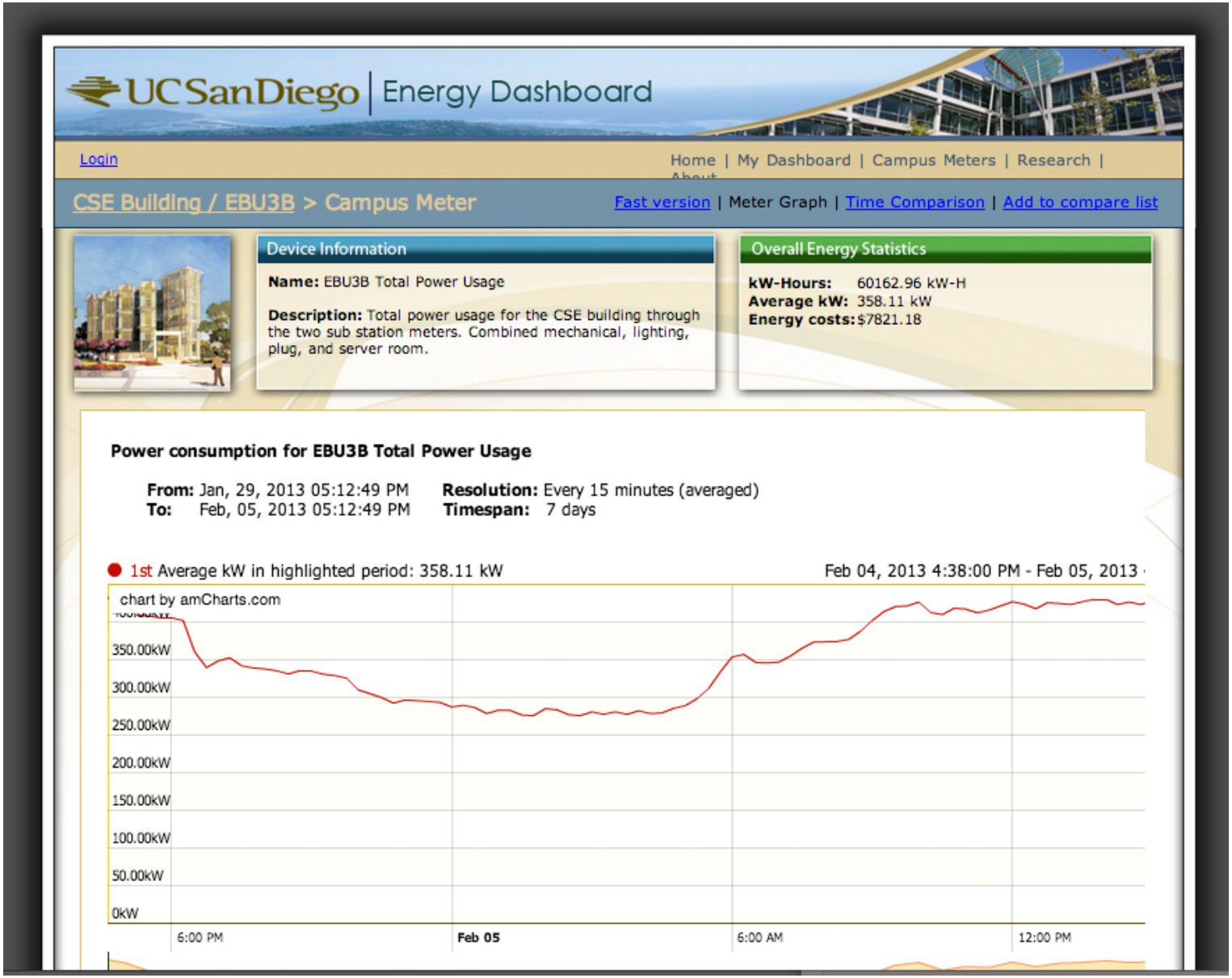
Goal: Intelligent Buildings

1. Deploy wireless sensor network
2. Model/estimator verification
3. Control design
4. Campus implementation



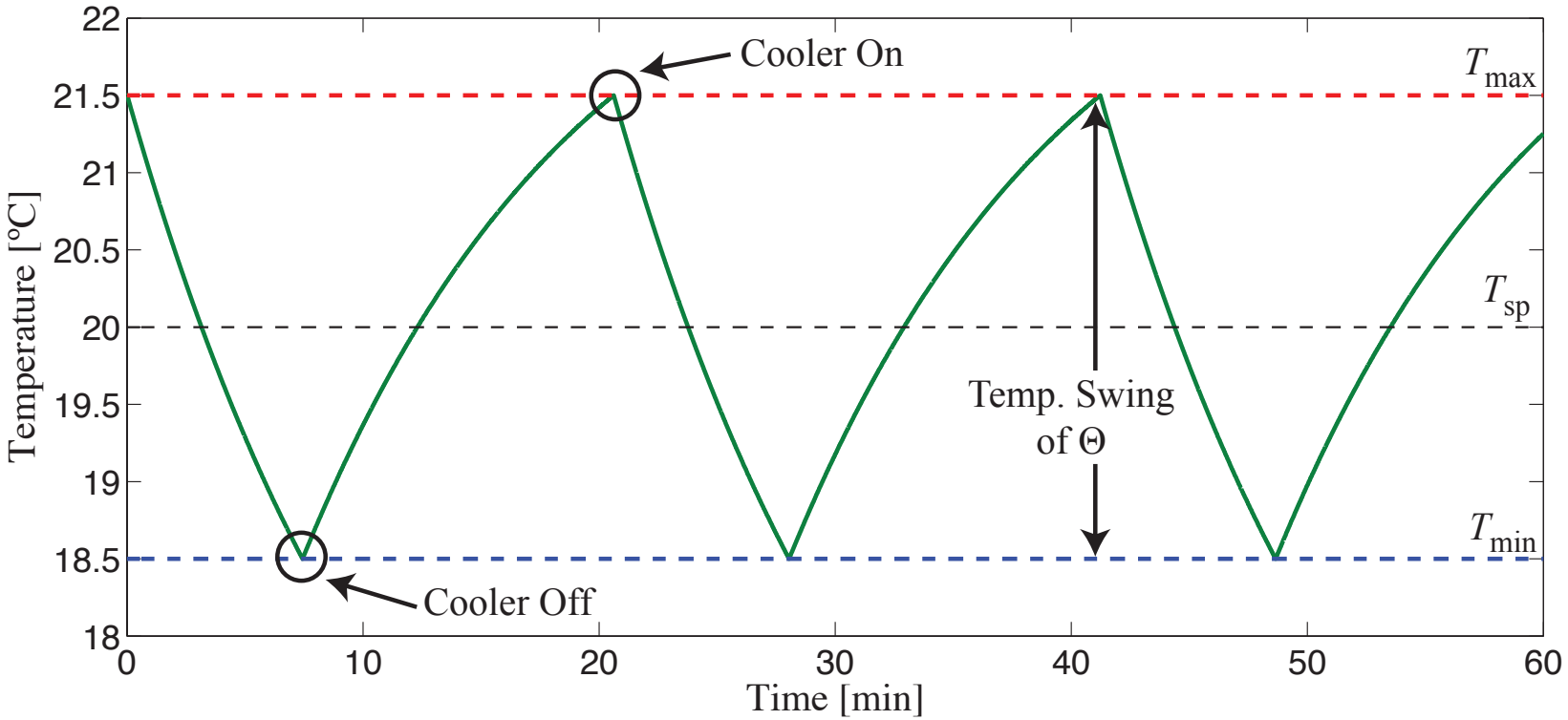
Libelium Waspmotes and Meshlium Gateway



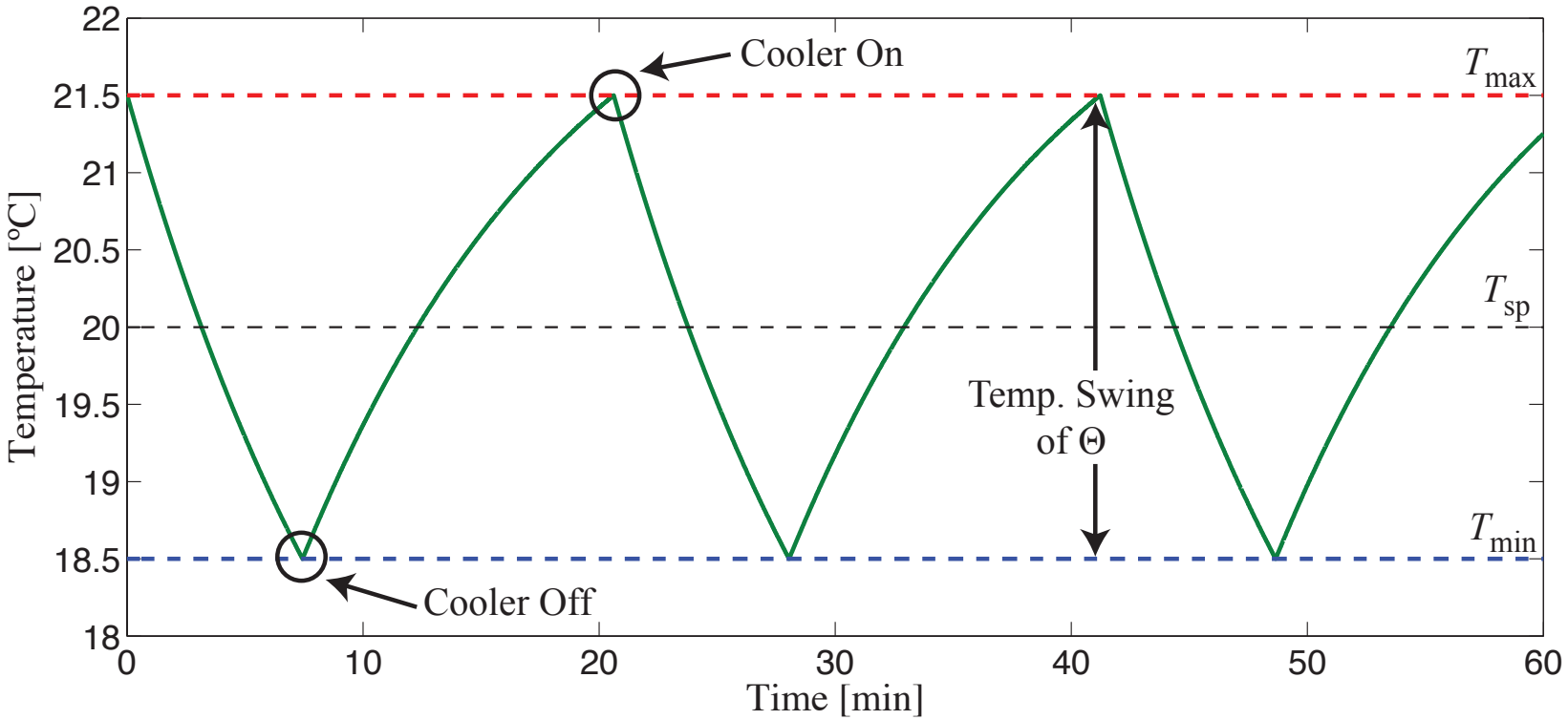


energy.ucsd.edu
Fuse data from Dr. Yuvraj Agarwal's Energy Dashboard project

Modeling TCLs



Modeling TCLs



$$\dot{T}_i(t) = \frac{1}{R_i C_i}\left[T_\infty - T_i(t) - s_i(t) R_i P_i\right], \quad i = 1, 2, \ldots, N$$

$$s_i \in \{0, 1\}$$

Modeling Aggregated TCLs

Main Idea: Convert 1000+ ODEs into two coupled linear PDEs

Modeling Aggregated TCLs

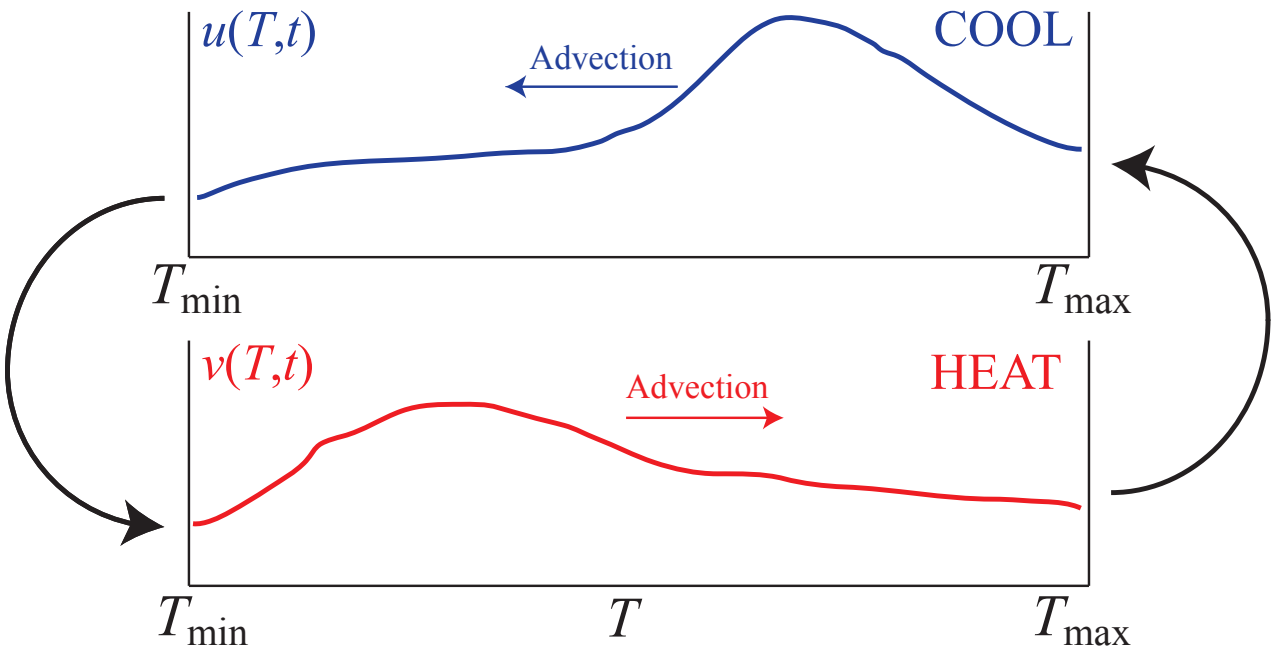
Main Idea: Convert 1000+ ODEs into two coupled linear PDEs

$u(T,t)$	# TCLs / °C, in COOL state, @ temp T, time t
$v(T,t)$	# TCLs / °C, in HEAT state, @ temp T, time t

Modeling Aggregated TCLs

Main Idea: Convert 1000+ ODEs into two coupled linear PDEs

$u(T,t)$	# TCLs / °C, in COOL state, @ temp T, time t
$v(T,t)$	# TCLs / °C, in HEAT state, @ temp T, time t



Modeling Aggregated TCLs

Main Idea: Convert 1000+ ODEs into two coupled linear PDEs

$u(T,t)$	# TCLs / °C, in COOL state, @ temp T, time t
$v(T,t)$	# TCLs / °C, in HEAT state, @ temp T, time t

Flux of TCLs in HEAT state:
#TCLs / sec

$$\psi(T,t) = v(T,t)\frac{dT}{dt}(t) = \frac{1}{RC}\left[T_\infty - T(t)\right]v(T,t)$$

Modeling Aggregated TCLs

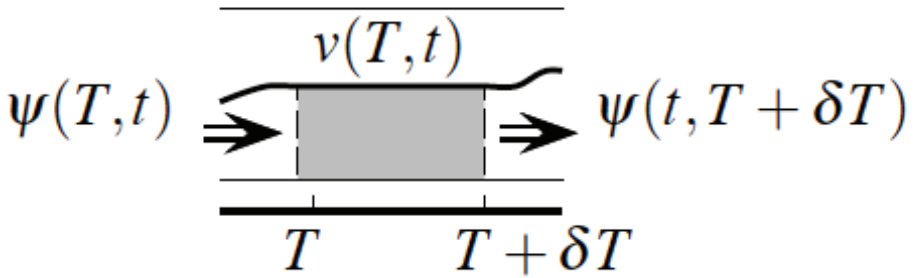
Main Idea: Convert 1000+ ODEs into two coupled linear PDEs

$u(T,t)$	# TCLs / °C, in COOL state, @ temp T, time t
$v(T,t)$	# TCLs / °C, in HEAT state, @ temp T, time t

Flux of TCLs in HEAT state:
#TCLs / sec

$$\psi(T,t) = v(T,t)\frac{dT}{dt}(t) = \frac{1}{RC}\left[T_\infty - T(t)\right] v(T,t)$$

Control volume:



Modeling Aggregated TCLs

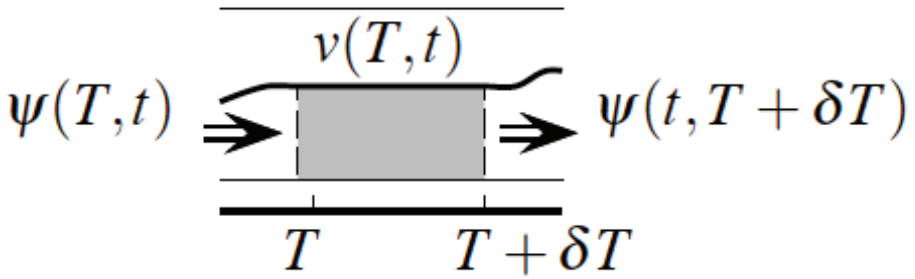
Main Idea: Convert 1000+ ODEs into two coupled linear PDEs

$u(T,t)$	# TCLs / °C, in COOL state, @ temp T, time t
$v(T,t)$	# TCLs / °C, in HEAT state, @ temp T, time t

Flux of TCLs in HEAT state:
#TCLs / sec

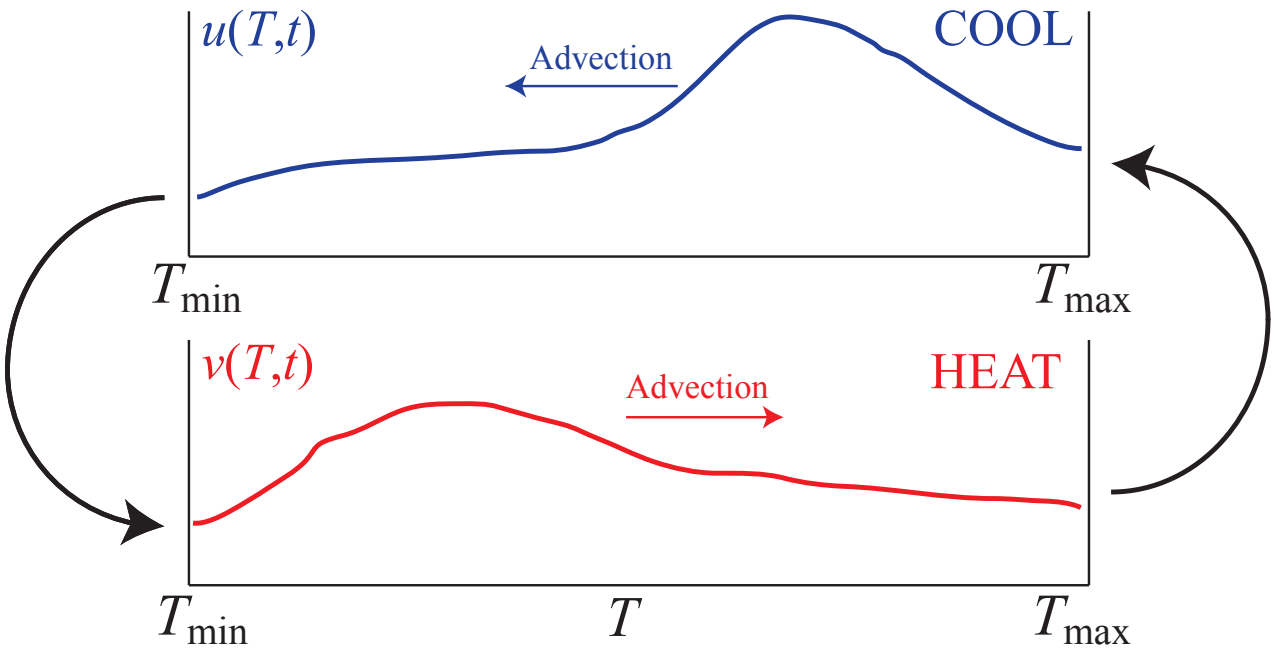
$$\psi(T,t) = v(T,t)\frac{dT}{dt}(t) = \frac{1}{RC}\left[T_\infty - T(t)\right]v(T,t)$$

Control volume:

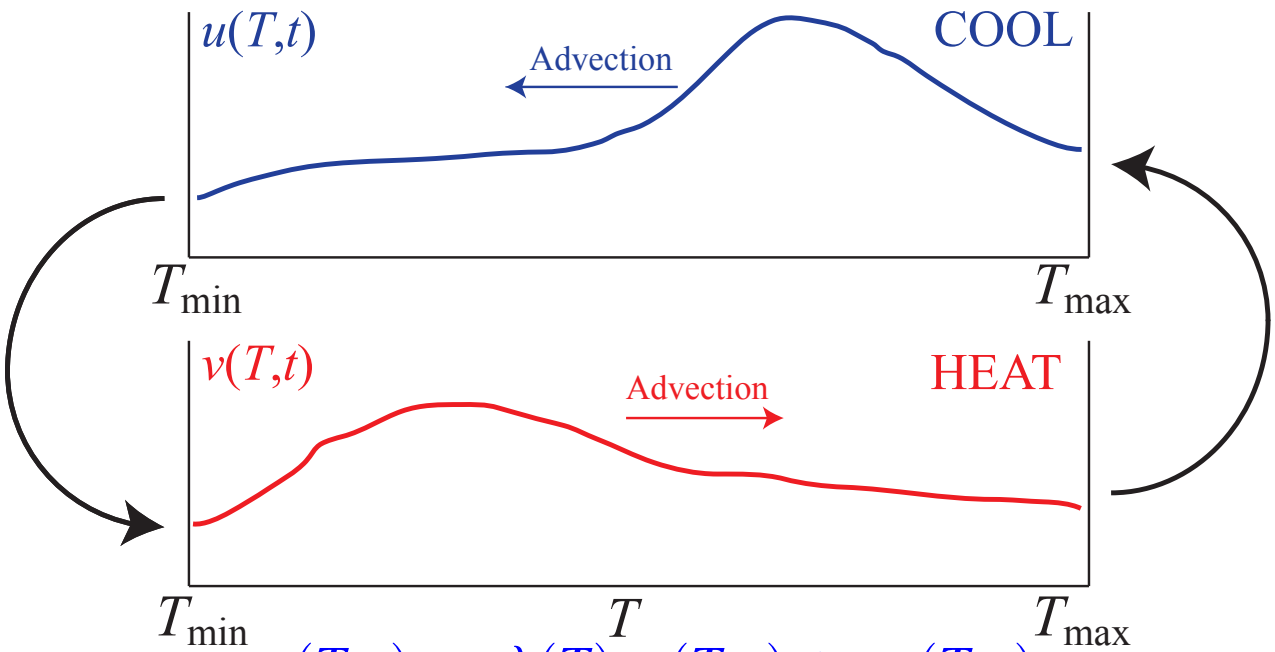


$$\begin{aligned}\frac{\partial v}{\partial t}(T,t) &= \lim_{\delta T \to 0}\left[\frac{\psi(T+\delta T,t)-\psi(T,t)}{\delta T}\right] \\ &= \frac{\partial \psi}{\partial T}(T,t) \\ &= -\frac{1}{RC}\left[T_\infty - T(t)\right]\frac{\partial v}{\partial T}(T,t) + \frac{1}{RC}v(T,t)\end{aligned}$$

PDE Model of Aggregated TCLs



PDE Model of Aggregated TCLs



$$u_t(T,t) = \alpha\lambda(T)u_T(T,t) + \alpha u(T,t)$$

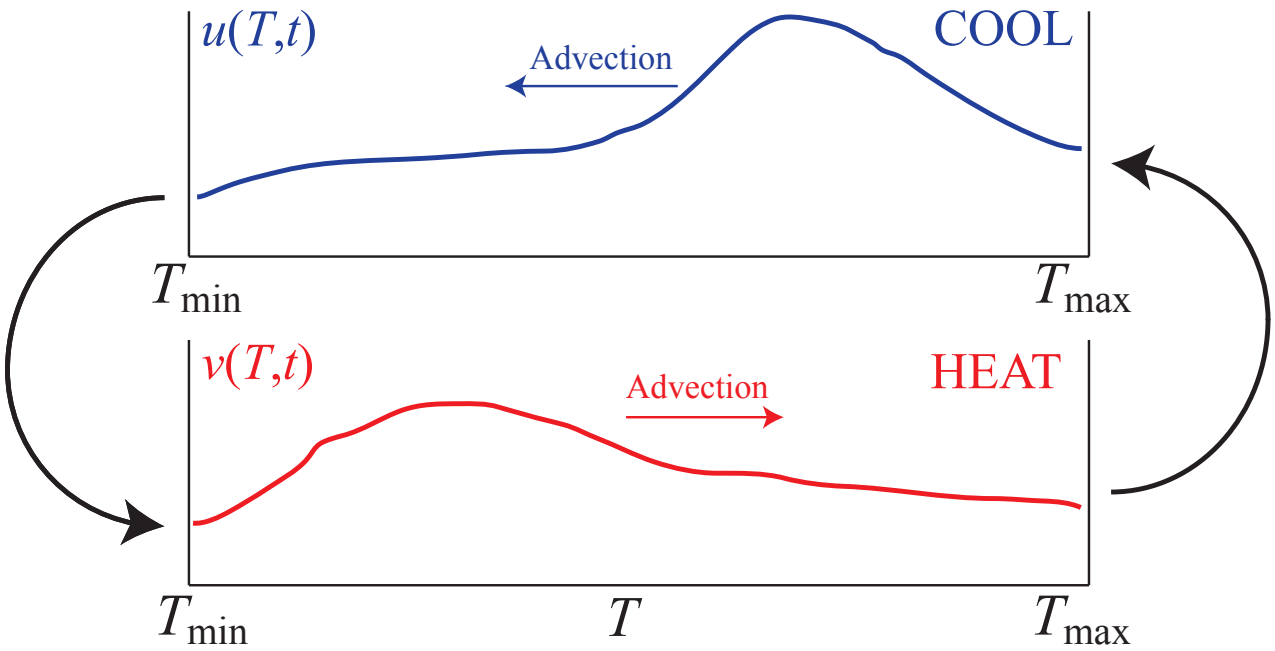
$$v_t(T,t) = -\alpha\mu(T)v_T(T,t) + \alpha v(T,t)$$

$$u(T_{\max},t) = q_1 v(T_{\max},t)$$

$$v(T_{\min},t) = q_2 u(T_{\min},t)$$

Video of 1,000 TCLs

PDE Model of Aggregated TCLs



$$u_t(T,t) = \alpha\lambda(T)u_T(T,t) + \alpha u(T,t)$$

$$v_t(T,t) = -\alpha\mu(T)v_T(T,t) + \alpha v(T,t)$$

$$u(T_{\max},t) = q_1 v(T_{\max},t)$$

$$v(T_{\min},t) = q_2 u(T_{\min},t)$$

Original Idea: Malhame and Chong, Trans. on Automatic Control (1985)
Remark: Assumes homogeneous populations

Modeling Heterogeneous Aggregated TCLs

Reality: TCL populations are heterogeneous
e.g. variable heat capacity, power, deadband sizes

Video of 1,000 heterogeneous TCLs

Modeling Heterogeneous Aggregated TCLs

Reality: TCL populations are heterogeneous
e.g. variable heat capacity, power, deadband sizes

$$
\begin{aligned}
u_t(T,t) &= \alpha\lambda(T)u_T(T,t) + \alpha u(T,t) + \beta u_{TT}(T,t) \\
v_t(T,t) &= -\alpha\mu(T)v_T(T,t) + \alpha v(T,t) + \beta v_{TT}(T,t) \\
u(T_{\max},t) &= q_1 v(T_{\max},t), \qquad u_T(T_{\min},t) = -v_T(T_{\min},t) \\
v(T_{\min},t) &= q_2 u(T_{\min},t), \qquad v_T(T_{\max},t) = -u_T(T_{\max},t)
\end{aligned}
$$

Modeling Heterogeneous Aggregated TCLs

Reality: TCL populations are heterogeneous
e.g. variable heat capacity, power, deadband sizes

$$
\begin{aligned}
u_t(T,t) &= \alpha\lambda(T)u_T(T,t) + \alpha u(T,t) + \beta u_{TT}(T,t) \\
v_t(T,t) &= -\alpha\mu(T)v_T(T,t) + \alpha v(T,t) + \beta v_{TT}(T,t) \\
u(T_{\max},t) &= q_1 v(T_{\max},t), \qquad u_T(T_{\min},t) = -v_T(T_{\min},t) \\
v(T_{\min},t) &= q_2 u(T_{\min},t), \qquad v_T(T_{\max},t) = -u_T(T_{\max},t)
\end{aligned}
$$

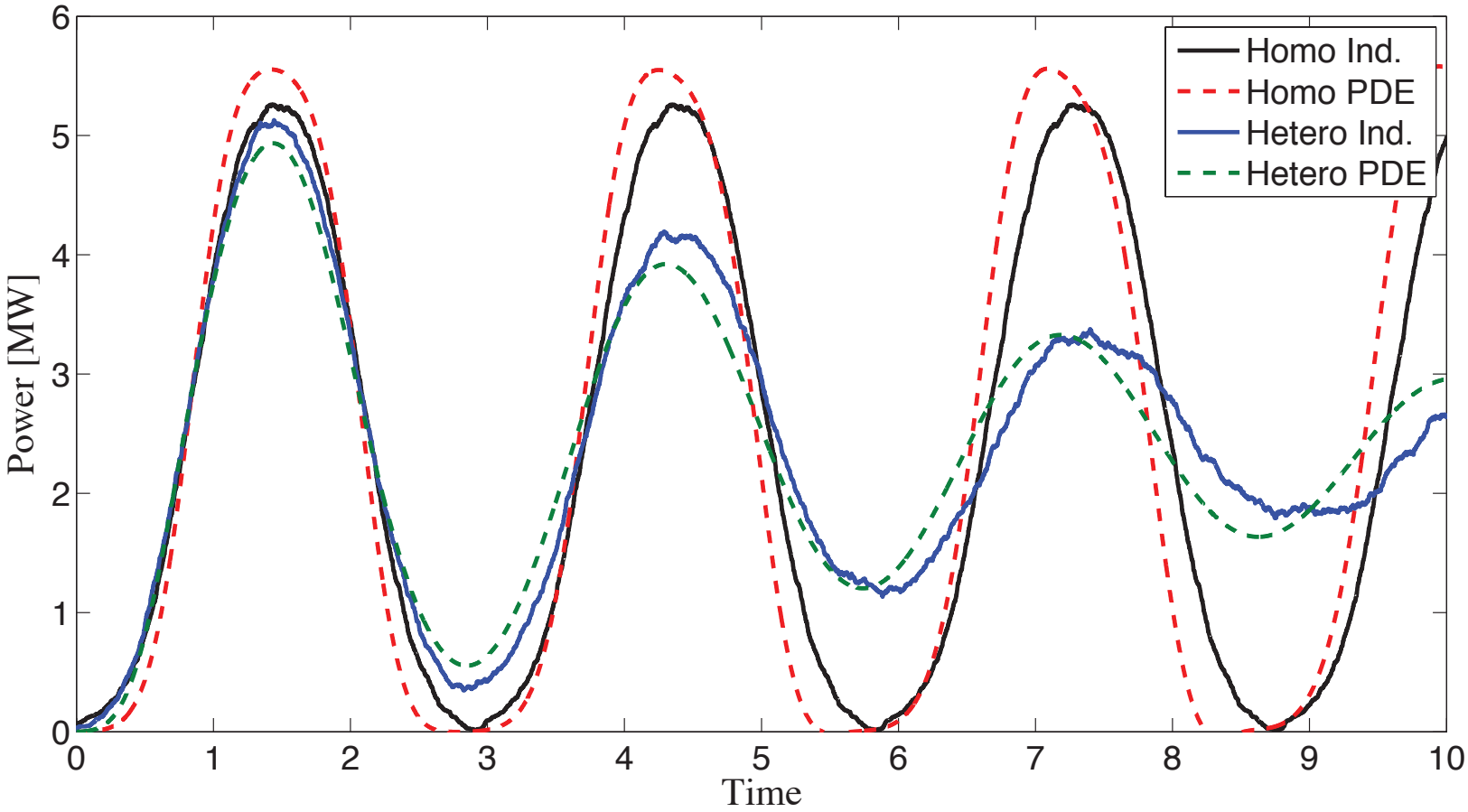
Proposition: The total number of TCLs is conserved over time.

$$
Q(t) = \int_{T_{\min}}^{T_{\max}} u(T,t)dT + \int_{T_{\min}}^{T_{\max}} v(T,t)dT
$$

$$
\frac{dQ}{dt}(t) = 0, \qquad \forall t
$$

Video Evolution of Heterogeneous PDE

Model Comparison



Outline

- Estimation - looking inside w/ Models, Meas., and Math

The State Estimation Problem

Question: Possible to monitor TCLs with minimal sensing infrastructure?

The State Estimation Problem

Question: Possible to monitor TCLs with minimal sensing infrastructure?

Answer: YES! Using HVAC on/off signals only and state estimation

The State Estimation Problem

Question: Possible to monitor TCLs with minimal sensing infrastructure?

Answer: YES! Using HVAC on/off signals only and state estimation

Problem Statement

Estimate states $u(T,t), v(T,t)$ from measurements of HVAC on/off signals

The State Estimation Problem

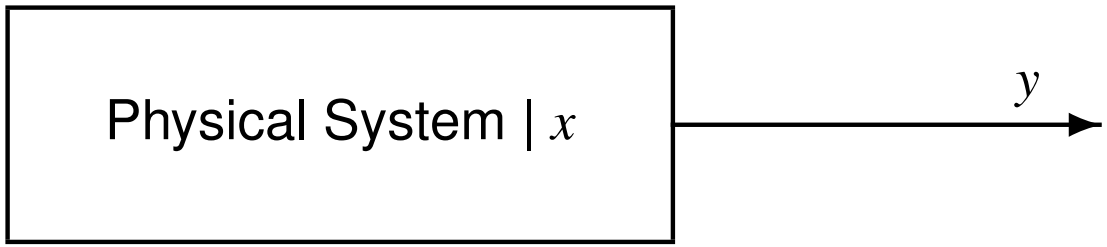
Question: Possible to monitor TCLs with minimal sensing infrastructure?

Answer: YES! Using HVAC on/off signals only and state estimation

Problem Statement

Estimate states $u(T,t), v(T,t)$ from measurements of HVAC on/off signals

Intro to Estimation



The State Estimation Problem

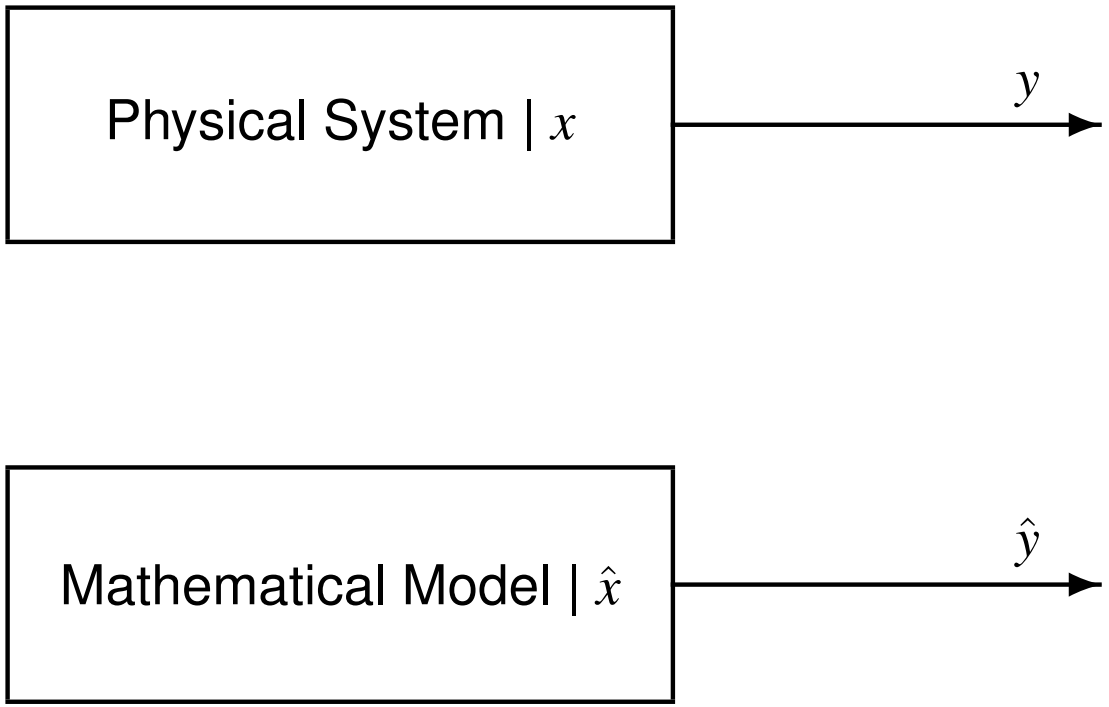
Question: Possible to monitor TCLs with minimal sensing infrastructure?

Answer: YES! Using HVAC on/off signals only and state estimation

Problem Statement

Estimate states $u(T,t), v(T,t)$ from measurements of HVAC on/off signals

Intro to Estimation



The State Estimation Problem

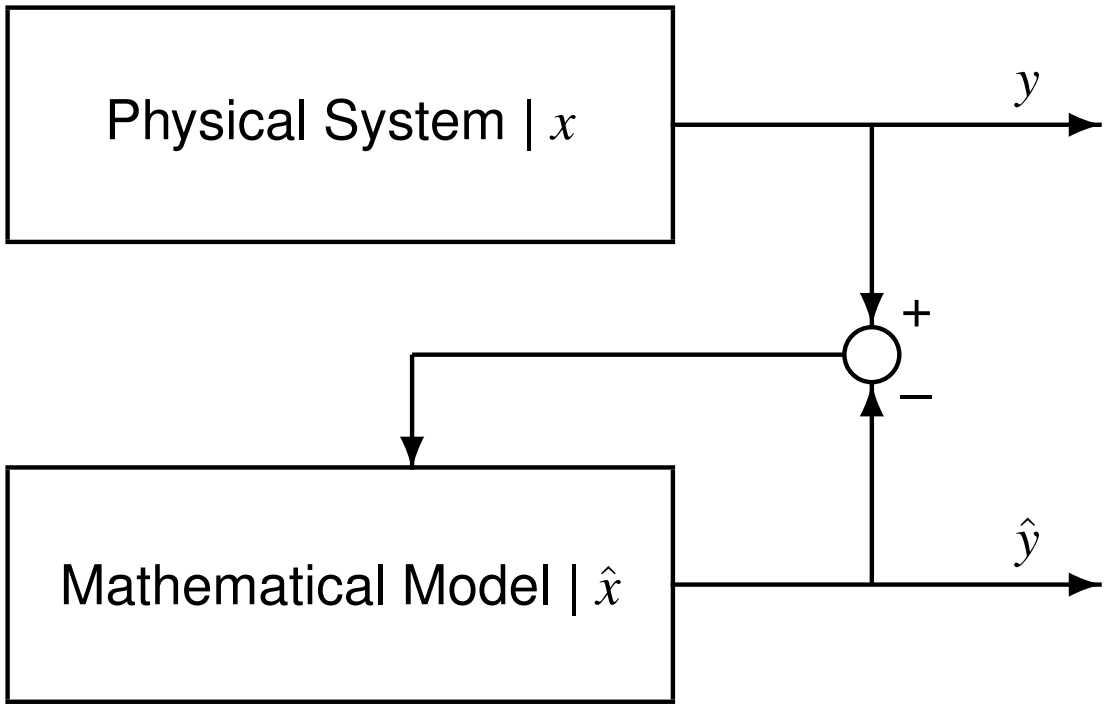
Question: Possible to monitor TCLs with minimal sensing infrastructure?

Answer: YES! Using HVAC on/off signals only and state estimation

Problem Statement

Estimate states $u(T,t), v(T,t)$ from measurements of HVAC on/off signals

Intro to Estimation



The State Estimation Problem

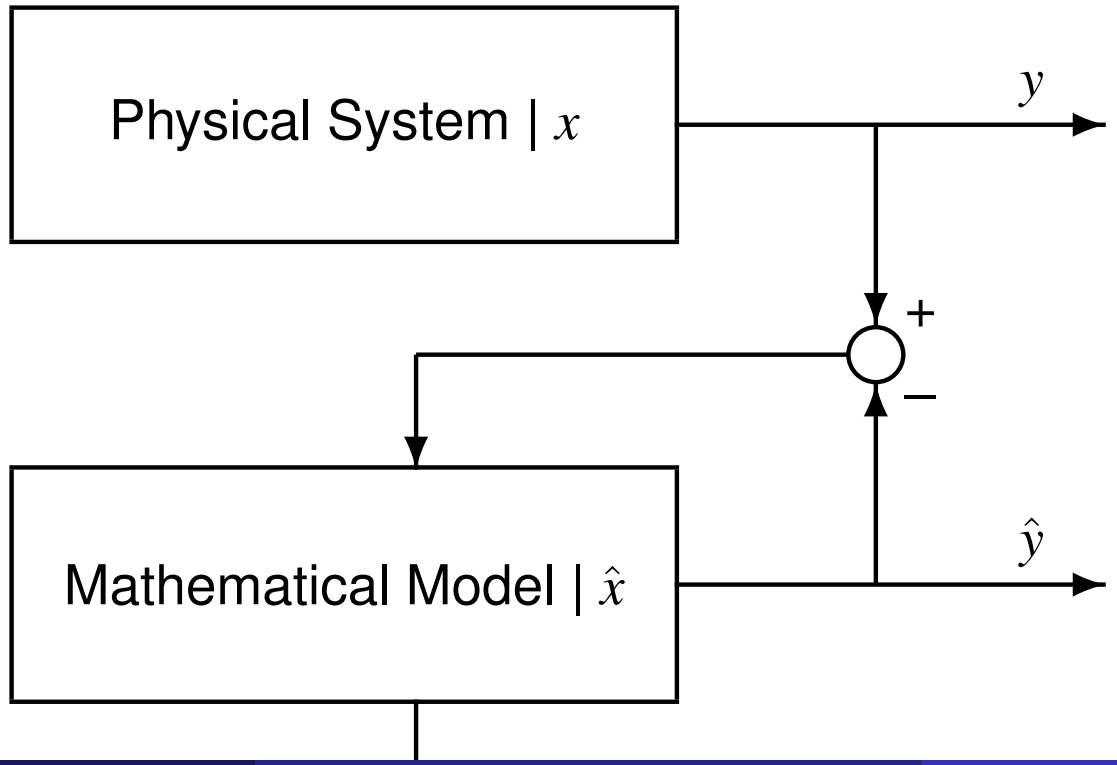
Question: Possible to monitor TCLs with minimal sensing infrastructure?

Answer: YES! Using HVAC on/off signals only and state estimation

Problem Statement

Estimate states $u(T,t), v(T,t)$ from measurements of HVAC on/off signals

Intro to Estimation



PDE State Estimator

Heterogeneous PDE Model: (u, v)

$$
\begin{aligned}
u_t(x,t) &= \alpha\lambda(x)u_x + \alpha u + \beta u_{xx} \\
v_t(x,t) &= -\alpha\mu(x)v_x + \alpha v + \beta v_{xx} \\
u(1,t) &= q_1 v(1,t), \qquad u_x(0,t) = -v_x(0,t) \\
v(0,t) &= q_2 u(0,t), \qquad v_x(1,t) = -u_x(1,t)
\end{aligned}
$$

PDE State Estimator

Estimator: $(\hat{u}, \hat{v})$

$$\hat{u}_t(x,t) = \alpha\lambda(x)\hat{u}_x + \alpha\hat{u} + \beta\hat{u}_{xx}$$
$$\hat{v}_t(x,t) = -\alpha\mu(x)\hat{v}_x + \alpha\hat{v} + \beta\hat{v}_{xx}$$
$$\hat{u}(1,t) = q_1 v(1,t), \qquad \hat{u}_x(0,t) = -\hat{v}_x(0,t) + p_{10}\left[u(0,t) - \hat{u}(0,t)\right]$$
$$\hat{v}(0,t) = q_2 u(0,t), \qquad \hat{v}_x(1,t) = -\hat{u}_x(1,t) + p_{20}\left[v(1,t) - \hat{v}(1,t)\right]$$

PDE State Estimator

Estimator: $(\hat{u}, \hat{v})$

$$\hat{u}_t(x,t) = \alpha\lambda(x)\hat{u}_x + \alpha\hat{u} + \beta\hat{u}_{xx}$$
$$\hat{v}_t(x,t) = -\alpha\mu(x)\hat{v}_x + \alpha\hat{v} + \beta\hat{v}_{xx}$$
$$\hat{u}(1,t) = q_1 v(1,t), \qquad \hat{u}_x(0,t) = -\hat{v}_x(0,t) + p_{10}\left[u(0,t) - \hat{u}(0,t)\right]$$
$$\hat{v}(0,t) = q_2 u(0,t), \qquad \hat{v}_x(1,t) = -\hat{u}_x(1,t) + p_{20}\left[v(1,t) - \hat{v}(1,t)\right]$$

Estimation Error Dynamics: $(\tilde{u}, \tilde{v}) = (u - \hat{u}, v - \hat{v})$

$$\tilde{u}_t(x,t) = \alpha\lambda(x)\tilde{u}_x + \alpha\tilde{u} + \beta\tilde{u}_{xx}$$
$$\tilde{v}_t(x,t) = -\alpha\mu(x)\tilde{v}_x + \alpha\tilde{v} + \beta\tilde{v}_{xx}$$
$$\tilde{u}(1,t) = 0, \qquad \tilde{u}_x(0,t) = -\tilde{v}_x(0,t) - p_{10}\tilde{u}(0,t)$$
$$\tilde{v}(0,t) = 0, \qquad \tilde{v}_x(1,t) = -\tilde{u}_x(1,t) - p_{20}\tilde{v}(1,t)$$

Goal: Pick $p_{10}, p_{20} \in \mathbb{R}$ such that $(\tilde{u}, \tilde{v}) = (0,0)$ is exponentially stable in $\mathcal{L}_2$-norm

Lyapunov Stability Analysis

Consider the $\mathcal{L}_2$-norm as a candidate Lyapunov functional

$$V(t) = \frac{1}{2}\int_0^1 \tilde{u}(x,t)^2 dx + \frac{1}{2}\int_0^1 \tilde{v}(x,t)^2 dx$$

Lyapunov Stability Analysis

Consider the $\mathcal{L}_2$-norm as a candidate Lyapunov functional

$$V(t) = \frac{1}{2}\int_0^1 \tilde{u}(x,t)^2 dx + \frac{1}{2}\int_0^1 \tilde{v}(x,t)^2 dx$$

The time derivative along the solution trajectories

$$\begin{aligned}\frac{dV}{dt}(t) \leq &\left[-\frac{\alpha}{2}\lambda' - \frac{\beta}{4} + \alpha\right]\int_0^1 \tilde{u}^2 dx + \left[\frac{\alpha}{2}\mu' - \frac{\beta}{4} + \alpha\right]\int_0^1 \tilde{v}^2 dx \\ &+ \left[\beta p_{10} - \frac{\alpha}{2}\lambda(0)\right]\tilde{u}^2(0) + \left[-\beta p_{20} + \frac{\alpha}{2}\mu(1)\right]\tilde{v}^2(1)\end{aligned}$$

Lyapunov Stability Analysis

Consider the $\mathcal{L}_2$-norm as a candidate Lyapunov functional

$$V(t) = \frac{1}{2}\int_0^1 \tilde{u}(x,t)^2 dx + \frac{1}{2}\int_0^1 \tilde{v}(x,t)^2 dx$$

The time derivative along the solution trajectories

$$\begin{aligned}\frac{dV}{dt}(t) \leq &\left[-\frac{\alpha}{2}\lambda' - \frac{\beta}{4} + \alpha\right]\int_0^1 \tilde{u}^2 dx + \left[\frac{\alpha}{2}\mu' - \frac{\beta}{4} + \alpha\right]\int_0^1 \tilde{v}^2 dx \\ &+ \left[\beta p_{10} - \frac{\alpha}{2}\lambda(0)\right]\tilde{u}^2(0) + \left[-\beta p_{20} + \frac{\alpha}{2}\mu(1)\right]\tilde{v}^2(1)\end{aligned}$$

Then the evolution of the $\mathcal{L}_2$-norm is bounded as

$$\begin{aligned}\|\tilde{u}(x,t)\|_{\mathcal{L}_2} &\leq \|\tilde{u}(x,0)\|_{\mathcal{L}_2} e^{\left[-\frac{\alpha}{2}\lambda' - \frac{\beta}{4} + \alpha\right]t}, \\ \|\tilde{v}(x,t)\|_{\mathcal{L}_2} &\leq \|\tilde{v}(x,0)\|_{\mathcal{L}_2} e^{\left[\frac{\alpha}{2}\mu' - \frac{\beta}{4} + \alpha\right]t},\end{aligned}$$

Video Evolution of PDE estimator

Key point: Converges to true distribution, using only HVAC on/off signals.

Future: Advanced Demand Response

- Control/Estimation Theory for Coupled PDEs
- UCSD Campus Deployment
- Hierarchical Structure
- Extension to PEVs