Adaptive Estimation and Control of Models for Battery Electrochemistry

Scott Moura, Ph.D.

UC President's Postdoctoral Fellow
Cymer Center for Control Systems and Dynamics
UC San Diego

March 7, 2013



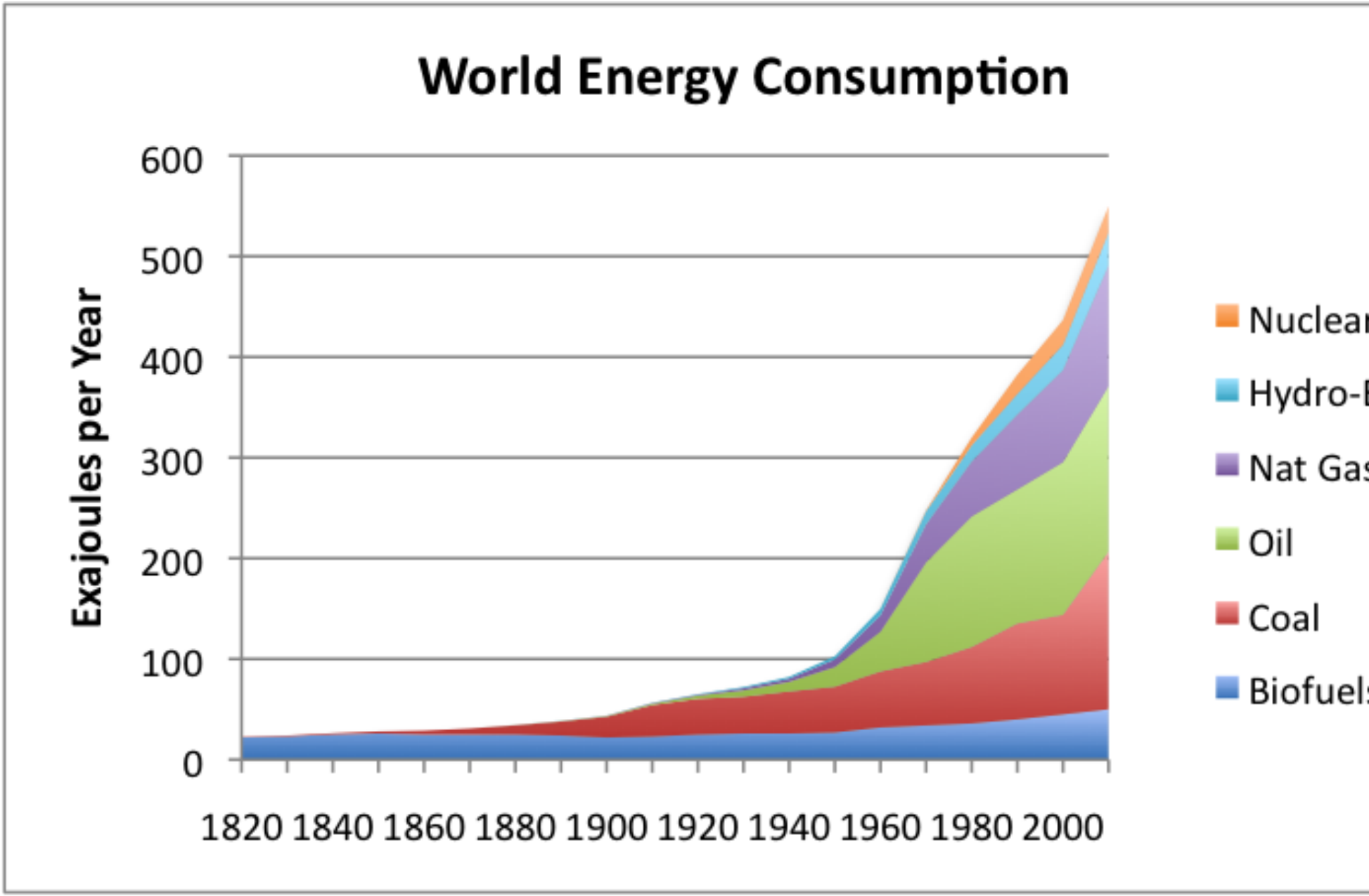
Carnegie Mellon

Core Philosophy:

(Dynamical models of physical phenomena)

$+$ (novel control paradigms)

$=$ (transformative advancements)



Vaclav Smil Estimates from Energy Transitions

Energy Initiatives



Denmark 50% wind penetration by 2025

China leads manufacturing of renewable tech

Brazil uses 86% renewables



EV Everywhere

SunShot

Green Button



Zero emissions vehicle (ZEV)

33% renewables by 2020

Go Solar California

Energy Crisis Solutions

Energy storage	Demand-side management
(e.g., batteries)	(e.g., smart grids)

Energy Crisis Solutions

Energy storage	Demand-side management
(e.g., batteries)	(e.g., smart grids)

Outline

1. Batteries
   - [Electrochemical Modeling] Incorporating Physics
   - [SOC/SOH Estimation] Looking Inside w/ Models, Meas., and Math
   - [Constrained Control] Operate at the Limits, Safely
2. Demand Response in Smart Grids
3. Future

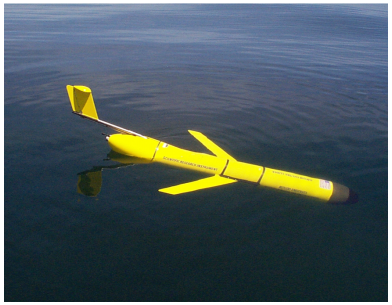
Outline

1. Batteries
   - [Electrochemical Modeling] Incorporating Physics
   - [SOC/SOH Estimation] Looking Inside w/ Models, Meas., and Math
   - [Constrained Control] Operate at the Limits, Safely
2. Demand Response in Smart Grids
3. Future

A Golden Era


IS-1
ST. JUDE MEDICAL
Sylmar, CA USA
ACCENT SR RF
PM1210 SSR
IS-1
ST. JUDE MEDICAL
Sylmar, CA USA
ANTHEM RF
PM3212 DDDRV





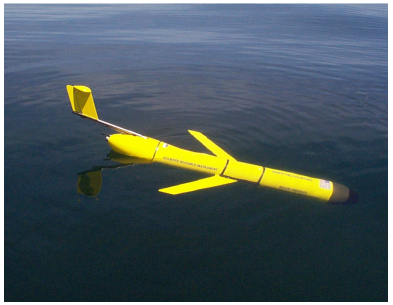




A Golden Era



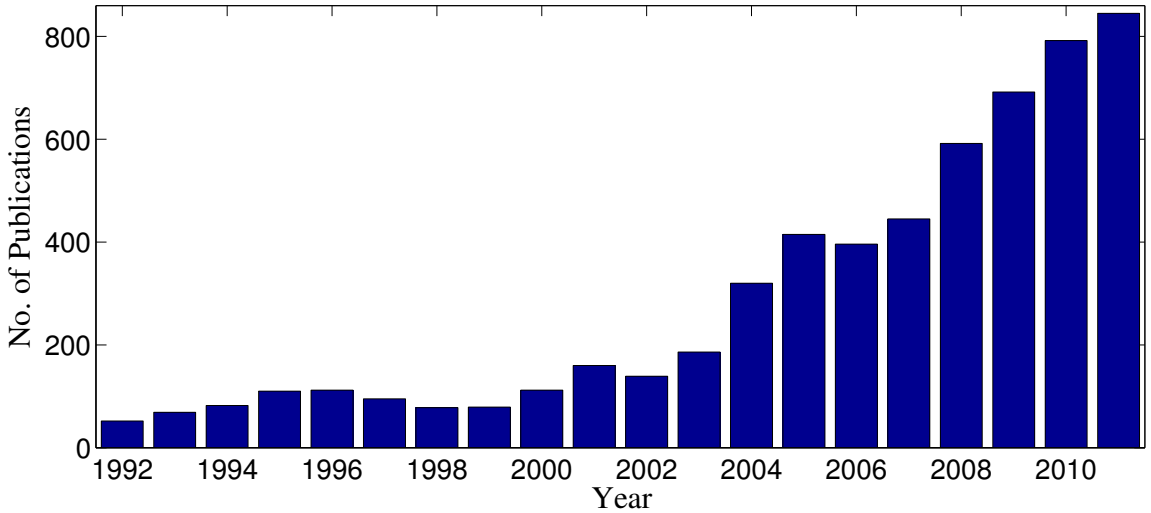








Keyword: “Battery Systems and Control”



The Battery Problem

Needs: Cheap, high energy, high power, long life

The Battery Problem

Needs: Cheap, high energy, high power, long life

Today's reality: Expensive, conservatively design/operated, die too quickly

The Battery Problem

Needs: Cheap, high energy, high power, long life

Today's reality: Expensive, conservatively design/operated, die too quickly

Some Motivating Facts

EV Batts	$800 / kWh now (2010) $125 / kWh for parity to IC engine Only 75% of available capacity is used Range anxiety inhibits adoption Lifetime risks caused by fast charging

The Battery Problem

Needs: Cheap, high energy, high power, long life

Today's reality: Expensive, conservatively design/operated, die too quickly

Some Motivating Facts

EV Batts	\$800 / kWh now (2010) \$125 / kWh for parity to IC engine Only 75% of available capacity is used Range anxiety inhibits adoption Lifetime risks caused by fast charging

Two Solutions

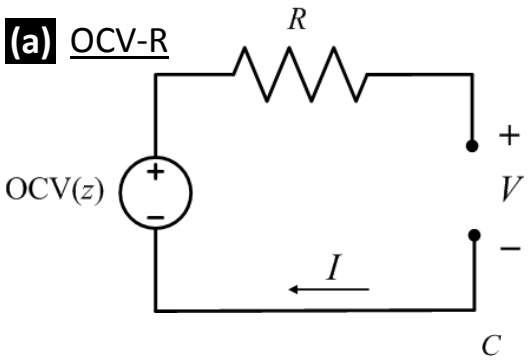
Design better batteries (materials science & chemistry)	Make current batteries better (estimation and control)

Outline

1. Batteries
   - [Electrochemical Modeling] Incorporating Physics
   - [SOC/SOH Estimation] Looking Inside w/ Models, Meas., and Math
   - [Constrained Control] Operate at the Limits, Safely
2. Demand Response in Smart Grids
3. Future

Battery Models

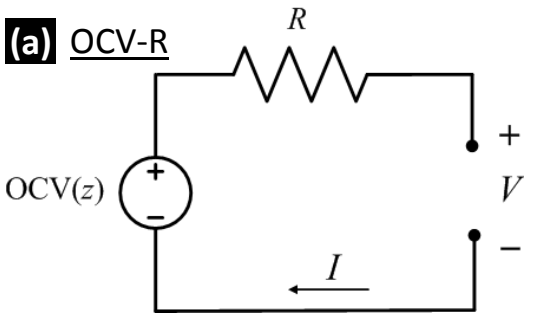
Equivalent Circuit Model



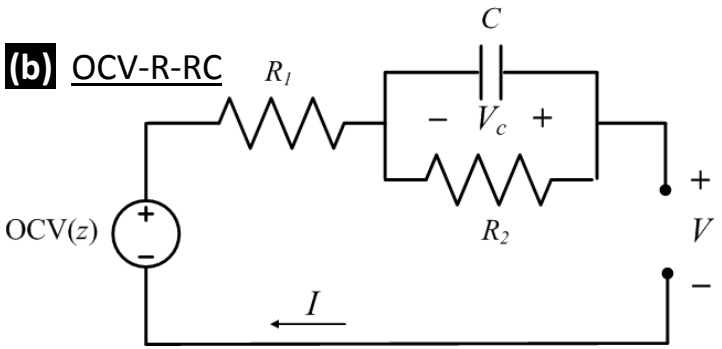
Battery Models

Equivalent Circuit Model

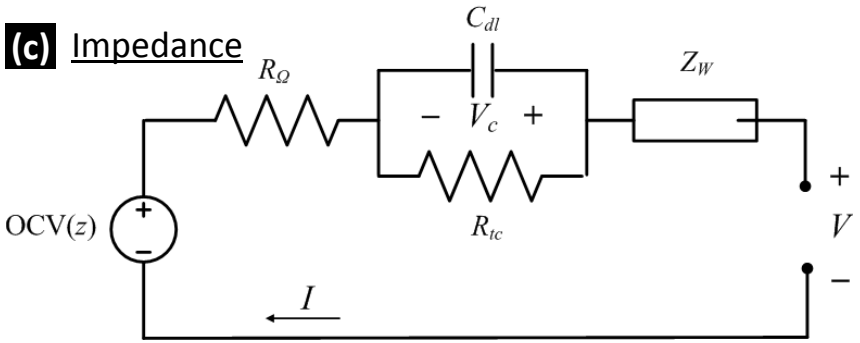
(a) OCV-R



(b) OCV-R-RC

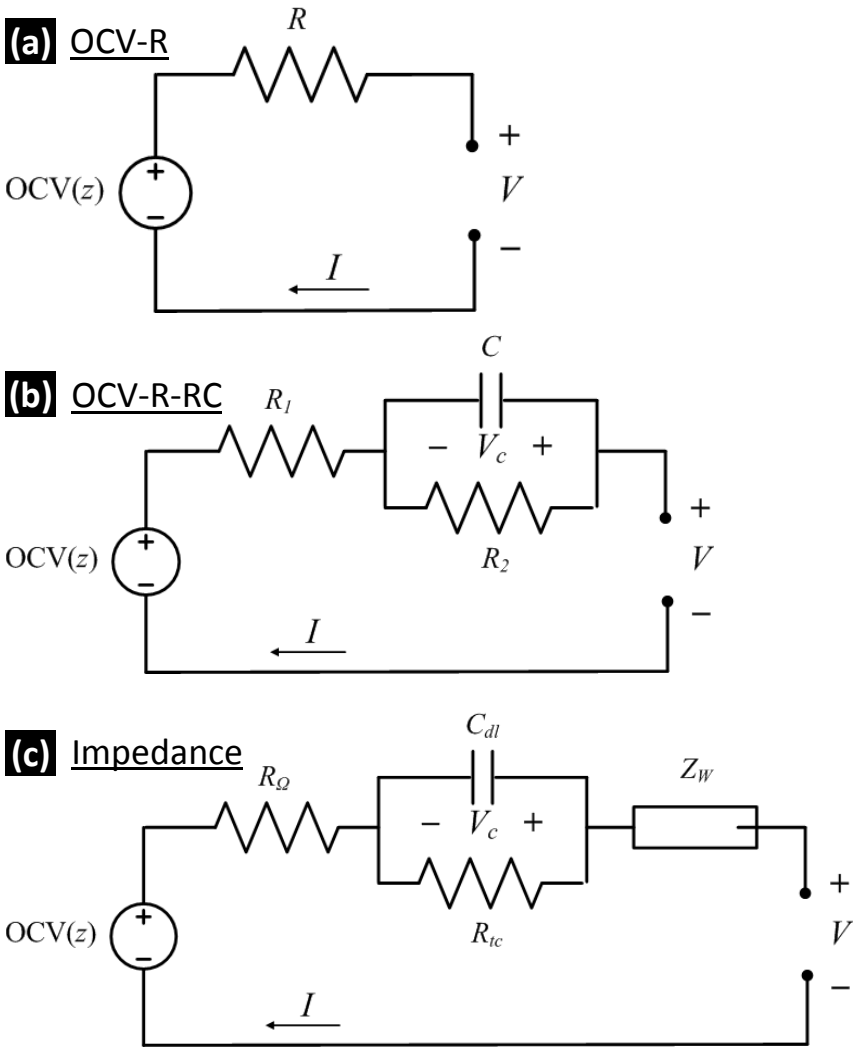


(c) Impedance

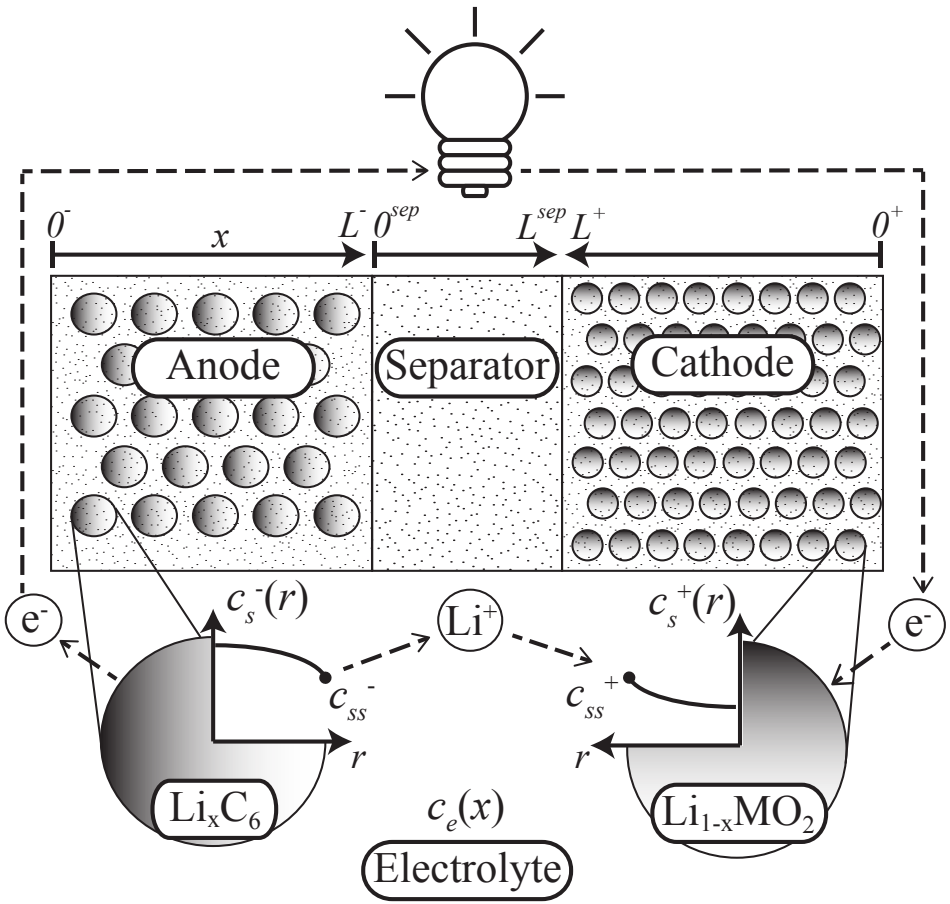


Battery Models

Equivalent Circuit Model

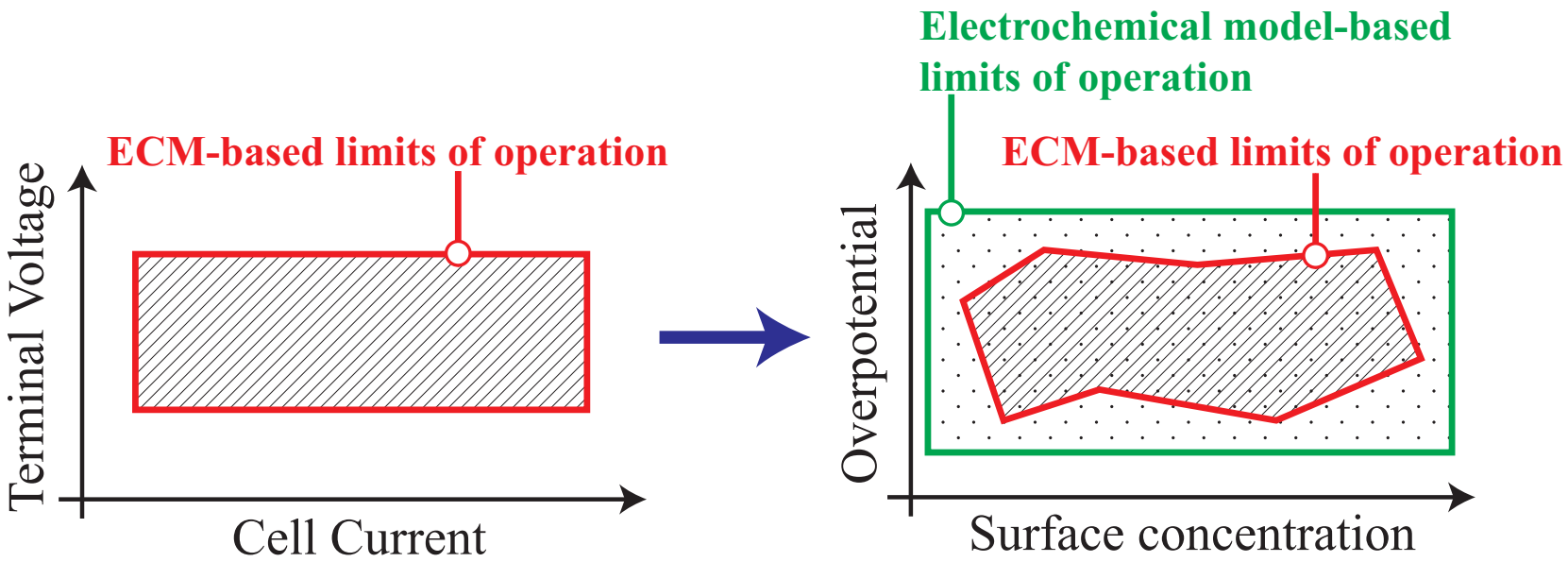


Electrochemical Model





Operate Batteries at their Physical Limits



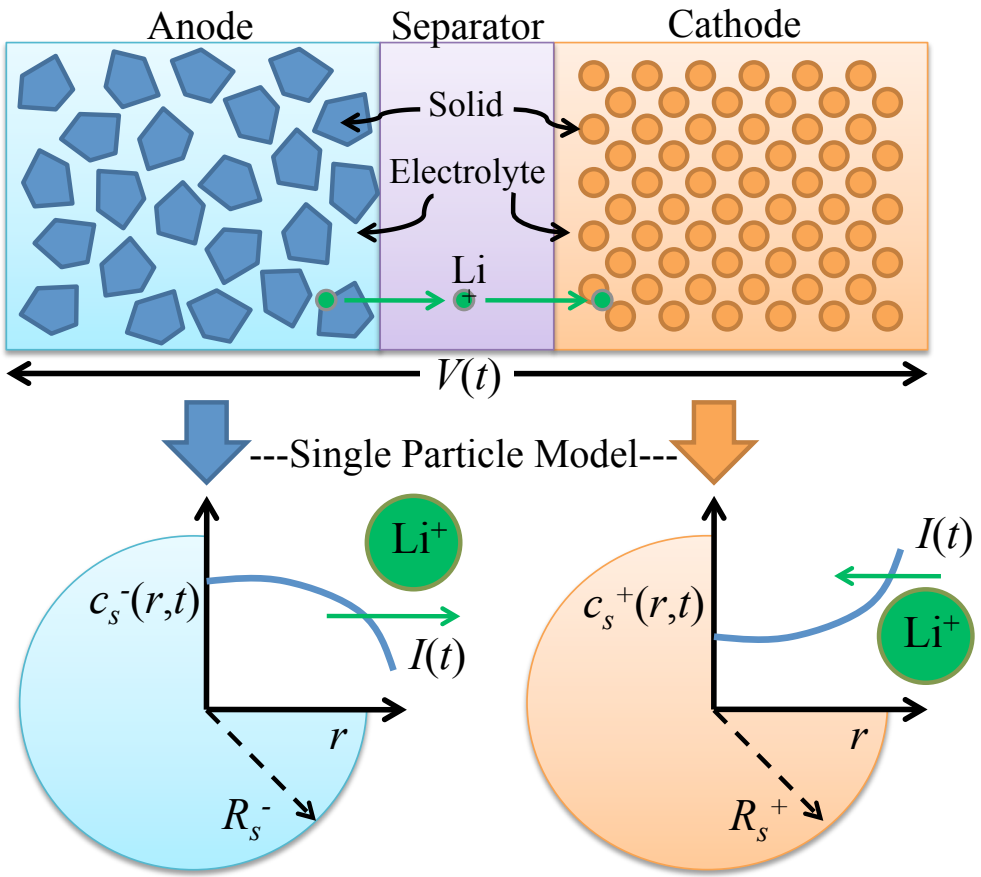
Electrochemical Model Equations

well, some of them

Description	**Equation**
Solid phase Li concentration	$\frac{\partial c_s^{\pm}}{\partial t}(x,r,t) = \frac{1}{r^2}\frac{\partial}{\partial r}\left[D_s^{\pm} r^2 \frac{\partial c_s^{\pm}}{\partial r}(x,r,t)\right]$
Electrolyte Li concentration	$\varepsilon_e \frac{\partial c_e}{\partial t}(x,t) = \frac{\partial}{\partial x}\left[\varepsilon_e D_e \frac{\partial c_e}{\partial x}(x,t) + \frac{1-t_c^0}{F} i_e^{\pm}(x,t)\right]$
Solid potential	$\frac{\partial \phi_s^{\pm}}{\partial x}(x,t) = \frac{i_e^{\pm}(x,t) - I(t)}{\sigma^{\pm}}$
Electrolyte potential	$\frac{\partial \phi_e}{\partial x}(x,t) = -\frac{i_e^{\pm}(x,t)}{\kappa} + \frac{2RT}{F}(1-t_c^0)\left(1 + \frac{d\ln f_{c/a}}{d\ln c_e}(x,t)\right)\frac{\partial \ln c_e}{\partial x}(x,t)$
Electrolyte ionic current	$\frac{\partial i_e^{\pm}}{\partial x}(x,t) = a_s F j_n^{\pm}(x,t)$
Molar flux btw phases	$j_n^{\pm}(x,t) = \frac{1}{F} i_0^{\pm}(x,t)\left[e^{\frac{\alpha_a F}{RT}\eta^{\pm}(x,t)} - e^{-\frac{\alpha_c F}{RT}\eta^{\pm}(x,t)}\right]$
Temperature	$\rho c_P \frac{dT}{dt}(t) = h\left[T^0(t) - T(t)\right] + I(t)V(t) - \int_{0^-}^{0^+} a_s F j_n(x,t)\Delta T(x,t)dx$

Animation of Li Ion Evolution

Single Particle Model (SPM)

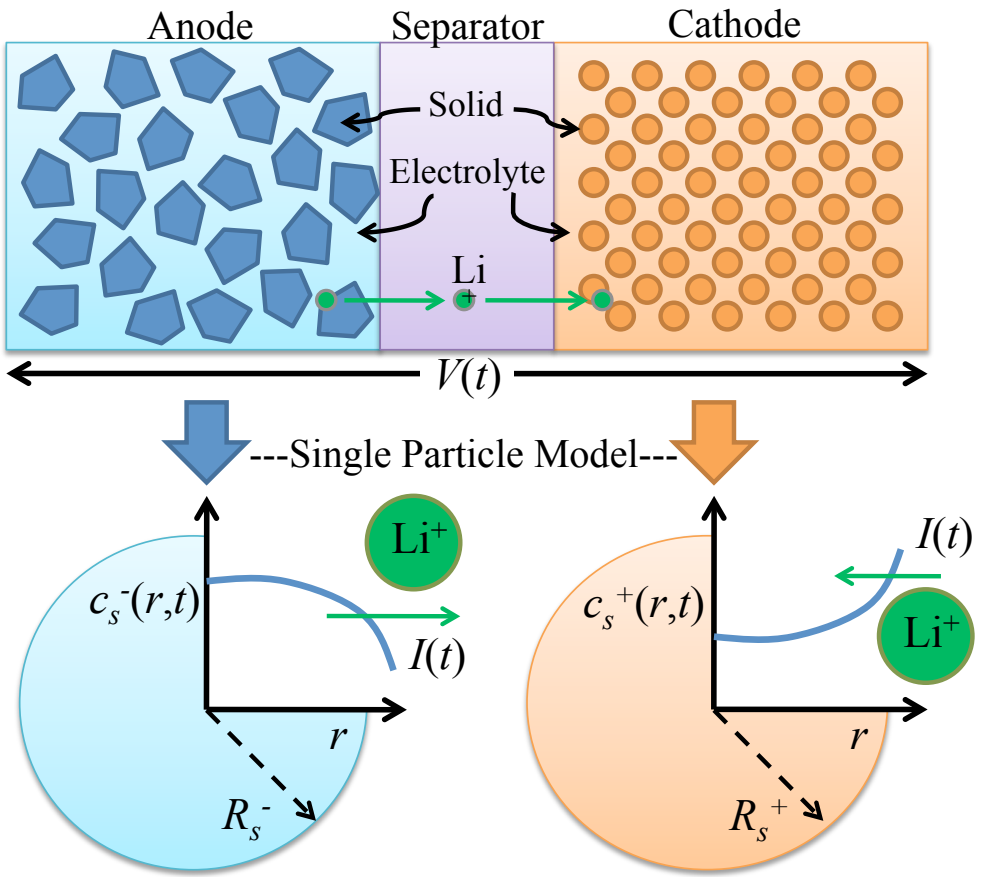


Single Particle Model (SPM)

Diffusion of Li in solid phase:

$$\frac{\partial c_s^-}{\partial t}(r,t) = \frac{D_s^-}{r^2}\frac{\partial}{\partial r}\left[r^2\frac{\partial^2 c_s^-}{\partial r^2}(r,t)\right]$$

$$\frac{\partial c_s^+}{\partial t}(r,t) = \frac{D_s^+}{r^2}\frac{\partial}{\partial r}\left[r^2\frac{\partial^2 c_s^+}{\partial r^2}(r,t)\right]$$



Single Particle Model (SPM)

Diffusion of Li in solid phase:

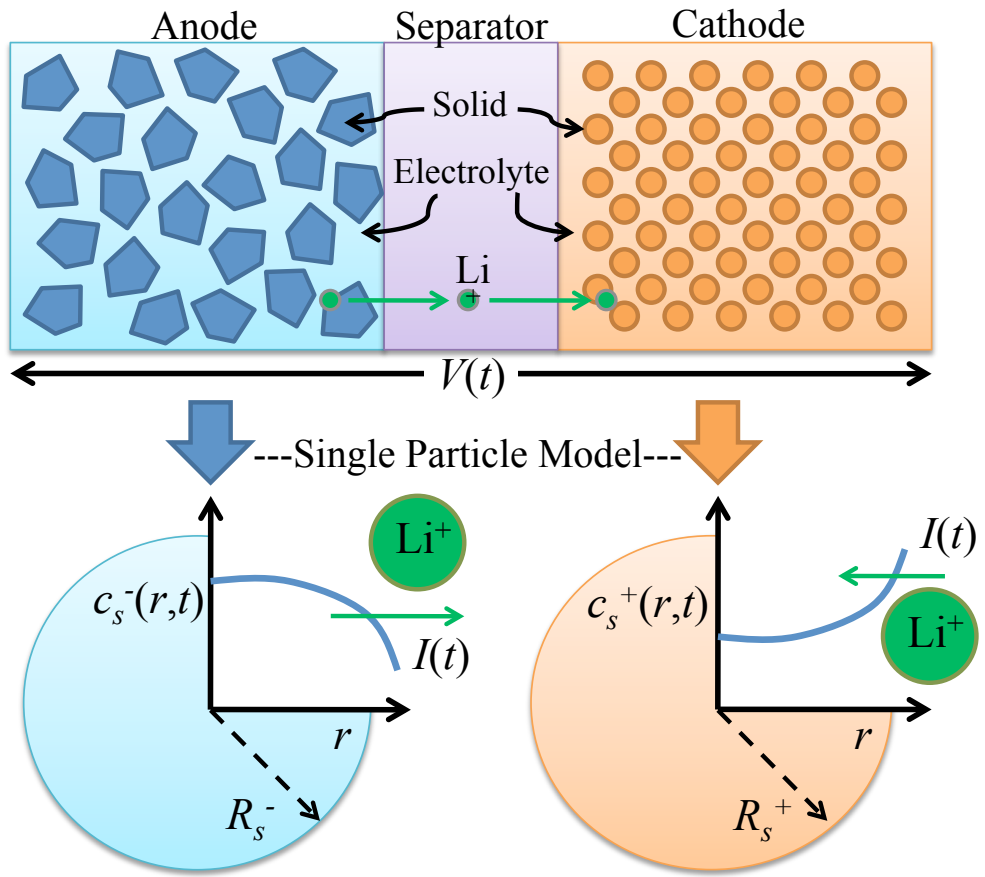
$$\frac{\partial c_s^-}{\partial t}(r,t) = \frac{D_s^-}{r^2}\frac{\partial}{\partial r}\left[r^2\frac{\partial^2 c_s^-}{\partial r^2}(r,t)\right]$$

$$\frac{\partial c_s^+}{\partial t}(r,t) = \frac{D_s^+}{r^2}\frac{\partial}{\partial r}\left[r^2\frac{\partial^2 c_s^+}{\partial r^2}(r,t)\right]$$

Boundary conditions:

$$\frac{\partial c_s^-}{\partial r}(R_s^-,t) = -\rho^+ I(t)$$

$$\frac{\partial c_s^+}{\partial r}(R_s^+,t) = \rho^- I(t)$$



Single Particle Model (SPM)

Diffusion of Li in solid phase:

$$\frac{\partial c_s^-}{\partial t}(r,t) = \frac{D_s^-}{r^2}\frac{\partial}{\partial r}\left[r^2\frac{\partial^2 c_s^-}{\partial r^2}(r,t)\right]$$

$$\frac{\partial c_s^+}{\partial t}(r,t) = \frac{D_s^+}{r^2}\frac{\partial}{\partial r}\left[r^2\frac{\partial^2 c_s^+}{\partial r^2}(r,t)\right]$$

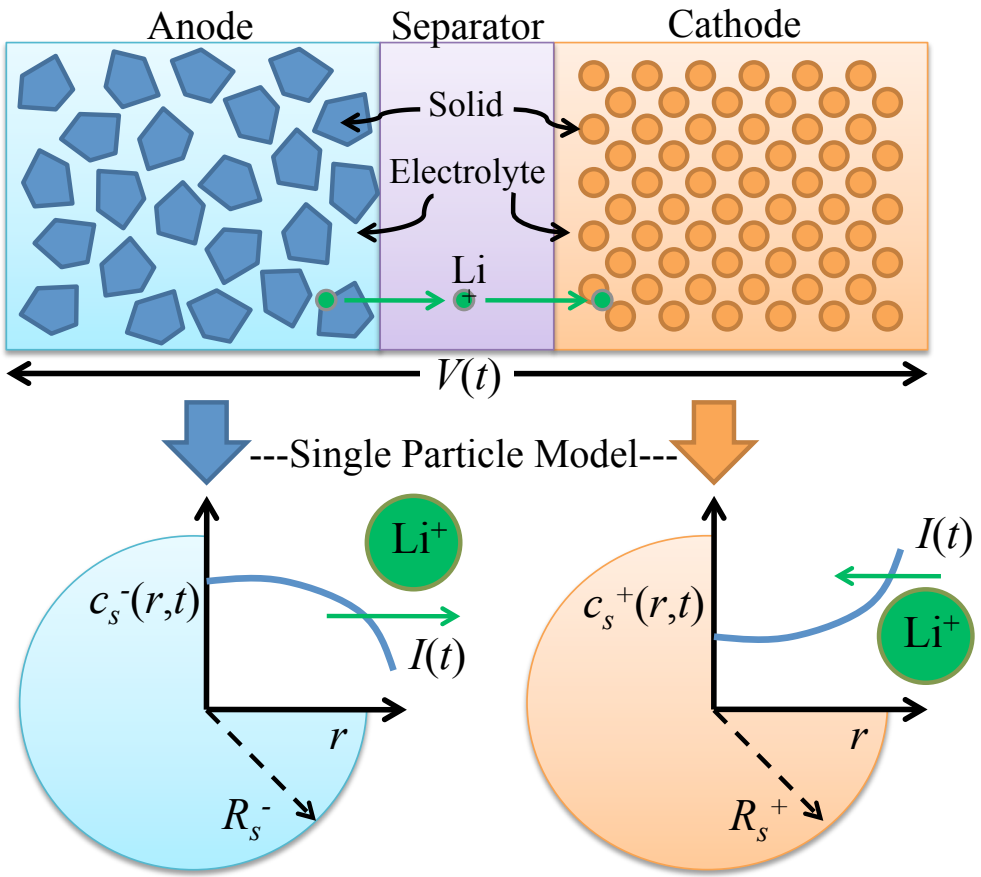
Boundary conditions:

$$\frac{\partial c_s^-}{\partial r}(R_s^-,t) = -\rho^+ I(t)$$

$$\frac{\partial c_s^+}{\partial r}(R_s^+,t) = \rho^- I(t)$$

Voltage Output Function:

$$V(t) = h(c_{ss}^-(t), c_{ss}^+(t), I(t); \theta)$$



Single Particle Model (SPM)

Diffusion of Li in solid phase:

$$\frac{\partial c_s^-}{\partial t}(r,t) = \frac{D_s^-}{r^2}\frac{\partial}{\partial r}\left[r^2\frac{\partial^2 c_s^-}{\partial r^2}(r,t)\right]$$

$$\frac{\partial c_s^+}{\partial t}(r,t) = \frac{D_s^+}{r^2}\frac{\partial}{\partial r}\left[r^2\frac{\partial^2 c_s^+}{\partial r^2}(r,t)\right]$$

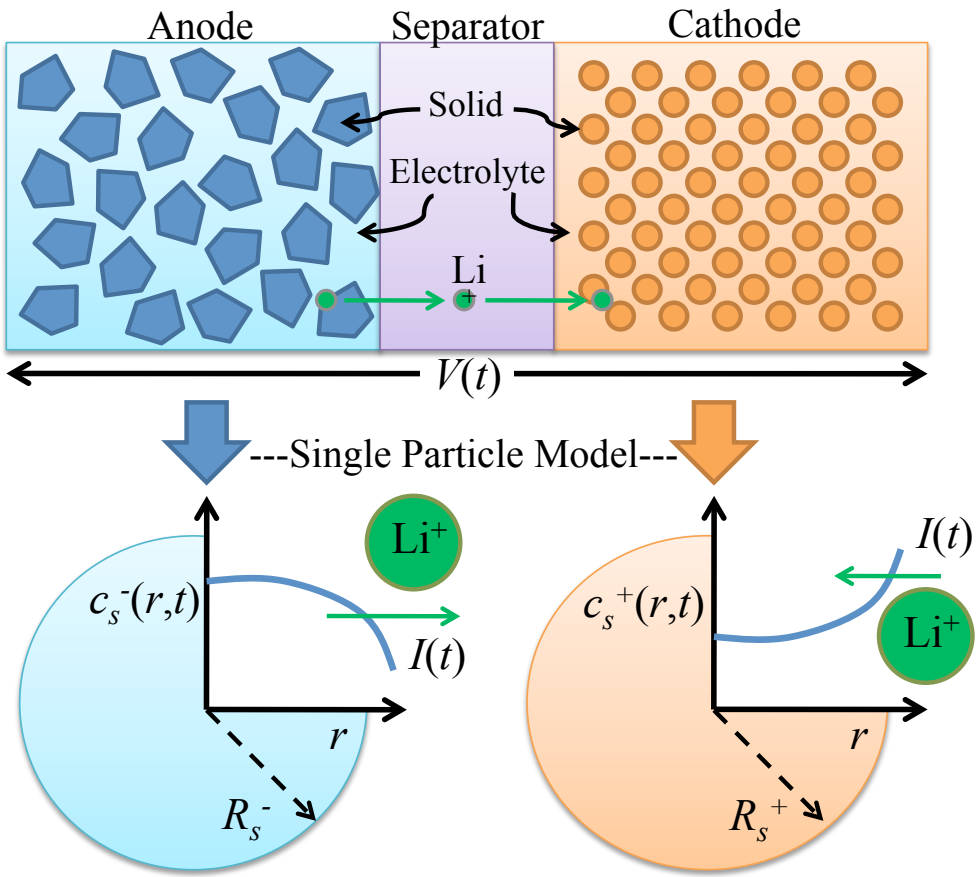
Boundary conditions:

$$\frac{\partial c_s^-}{\partial r}(R_s^-,t) = -\rho^+ I(t)$$

$$\frac{\partial c_s^+}{\partial r}(R_s^+,t) = \rho^- I(t)$$

Voltage Output Function:

$$V(t) = h(c_{ss}^-(t), c_{ss}^+(t), I(t); \theta)$$



Definitions

- SOC: Bulk concentration SOC_{bulk}, Surface concentration $c_{ss}^-(t)$
- SOH: Physical parameters, e.g. ε, q, n_{Li}, R_f

Outline

1. Batteries
   - [Electrochemical Modeling] Incorporating Physics
   - [SOC/SOH Estimation] Looking Inside w/ Models, Meas., and Math
   - [Constrained Control] Operate at the Limits, Safely
2. Demand Response in Smart Grids
3. Future

The SOC Estimation Problem

Problem Statement

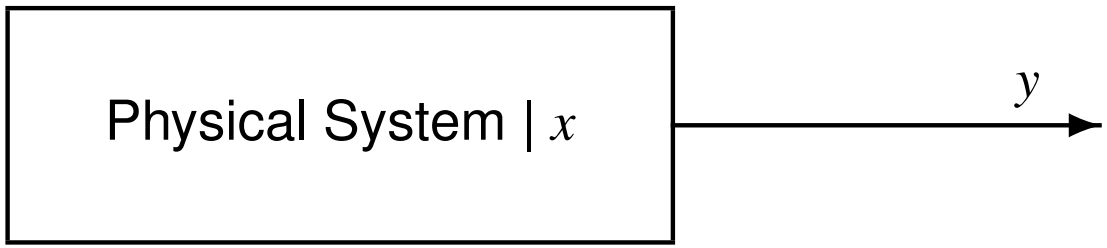
Estimate states $c_s^-(r,t), c_s^+(r,t)$ from measurements $I(t), V(t)$ and SPM

The SOC Estimation Problem

Problem Statement

Estimate states $c_s^-(r,t), c_s^+(r,t)$ from measurements $I(t), V(t)$ and SPM

Intro to Estimation

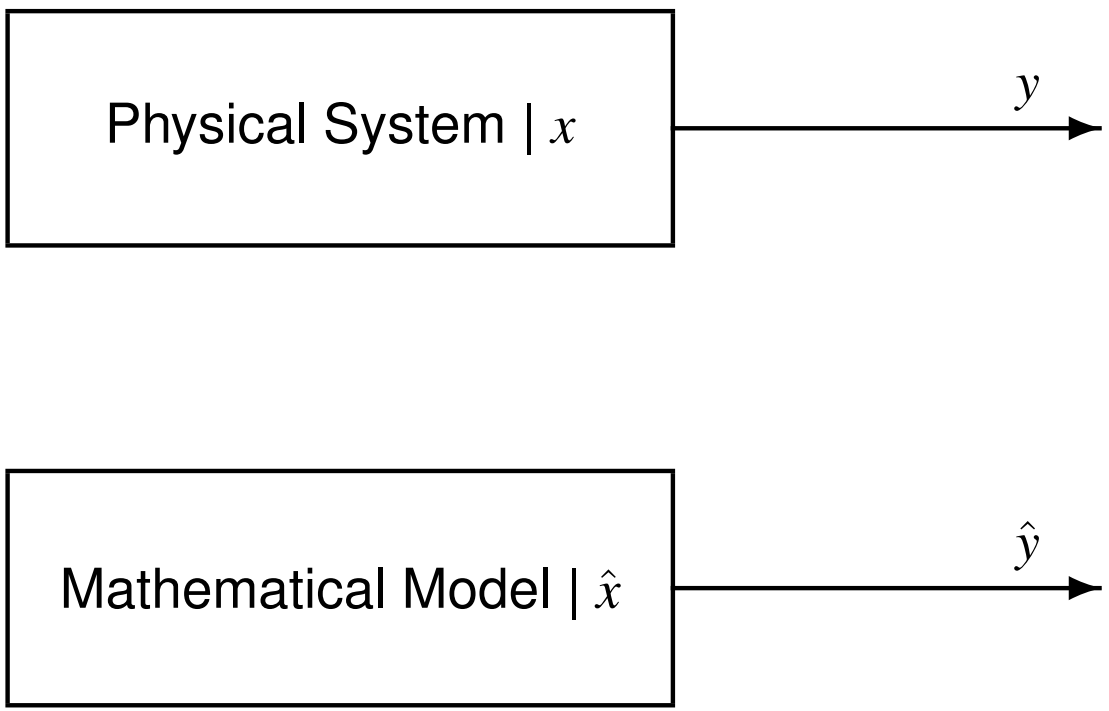


The SOC Estimation Problem

Problem Statement

Estimate states $c_s^-(r,t), c_s^+(r,t)$ from measurements $I(t), V(t)$ and SPM

Intro to Estimation

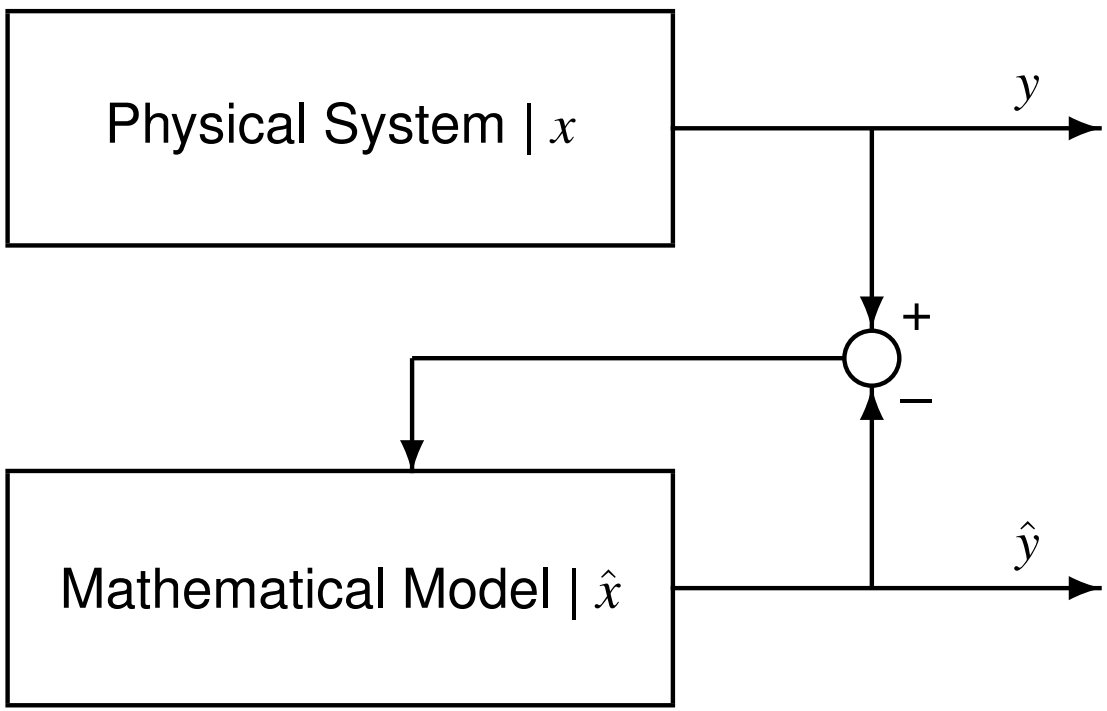


The SOC Estimation Problem

Problem Statement

Estimate states $c_s^-(r,t), c_s^+(r,t)$ from measurements $I(t), V(t)$ and SPM

Intro to Estimation

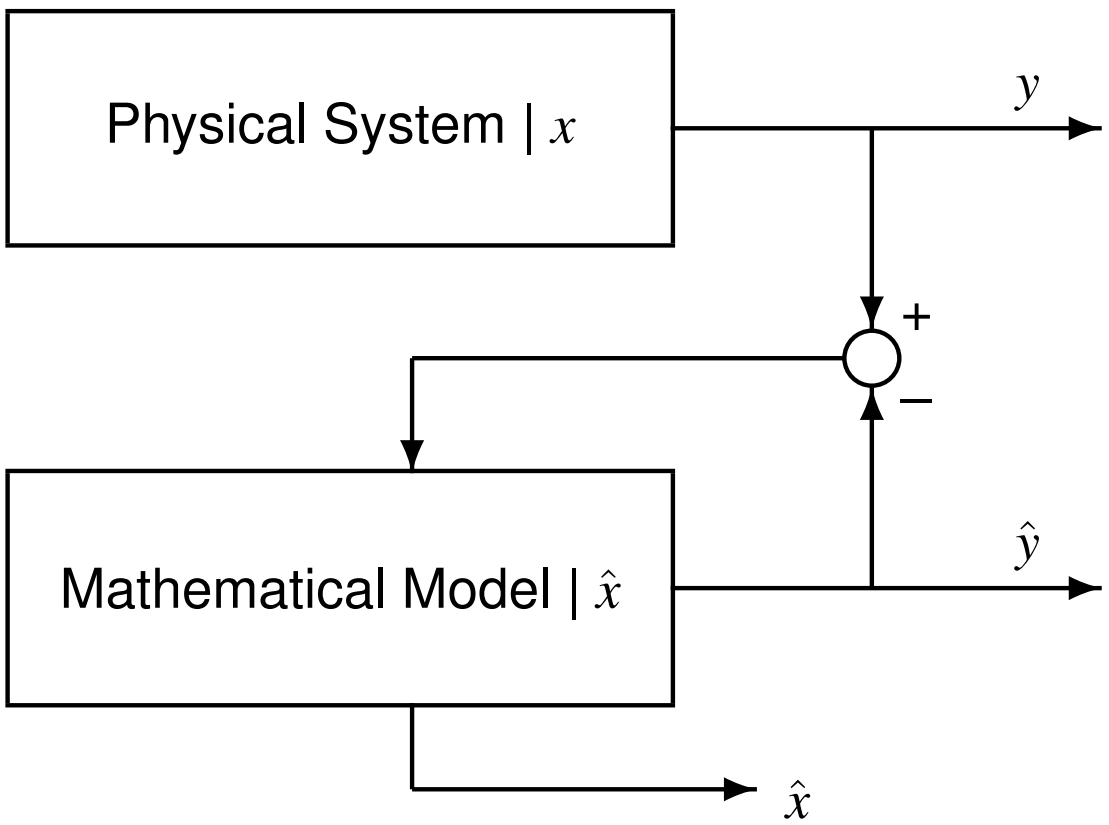


The SOC Estimation Problem

Problem Statement

Estimate states $c_s^-(r,t), c_s^+(r,t)$ from measurements $I(t), V(t)$ and SPM

Intro to Estimation



Backstepping PDE Estimator

Simplify the Math

- Model reduction to achieve observability
- Normalize time and space
- Scale spatial dimension

Backstepping PDE Estimator

Model Eqns. for Observer Design: $c(r,t)$

$$\begin{aligned} \frac{\partial c}{\partial t}(r,t) &= \varepsilon \frac{\partial^2 c}{\partial r^2}(r,t) && \text{Heat PDE} \\ c(0,t) &= 0 \\ \frac{\partial c}{\partial r}(1,t) - c(1,t) &= -q\rho I(t) \\ \text{Measurement} &= c(1,t) = \check{c}_{ss}^{-}(t) \end{aligned}$$

Backstepping PDE Estimator

Estimator: $\hat{c}(r,t)$

$$\begin{aligned}
\frac{\partial \hat{c}}{\partial t}(r,t) &= \varepsilon \frac{\partial^2 \hat{c}}{\partial r^2}(r,t) + p_1(r)\left[c(1,t) - \hat{c}(1,t)\right] \\
\hat{c}(0,t) &= 0 \\
\frac{\partial \hat{c}}{\partial r}(1,t) - \hat{c}(1,t) &= -q\rho I(t) + p_{10}\left[c(1,t) - \hat{c}(1,t)\right]
\end{aligned}$$

Backstepping PDE Estimator

Estimator: $\hat{c}(r,t)$

$$\begin{aligned}
\frac{\partial \hat{c}}{\partial t}(r,t) &= \varepsilon \frac{\partial^2 \hat{c}}{\partial r^2}(r,t) + p_1(r)\left[c(1,t) - \hat{c}(1,t)\right] \\
\hat{c}(0,t) &= 0 \\
\frac{\partial \hat{c}}{\partial r}(1,t) - \hat{c}(1,t) &= -q\rho I(t) + p_{10}\left[c(1,t) - \hat{c}(1,t)\right]
\end{aligned}$$

Estimation Error Dynamics: $\tilde{c}(r,t) = c(r,t) - \hat{c}(r,t)$

$$\begin{aligned}
\frac{\partial \tilde{c}}{\partial t}(r,t) &= \varepsilon \frac{\partial^2 \tilde{c}}{\partial r^2}(r,t) - p_1(r)\tilde{c}(1,t) \\
\tilde{c}(0,t) &= 0 \\
\frac{\partial \tilde{c}}{\partial r}(1,t) - \tilde{c}(1,t) &= -p_{10}\tilde{c}(1,t)
\end{aligned}$$

Backstepping PDE Estimator

Estimator: $\hat{c}(r,t)$

$$\begin{aligned}
\frac{\partial \hat{c}}{\partial t}(r,t) &= \varepsilon \frac{\partial^2 \hat{c}}{\partial r^2}(r,t) + p_1(r)\left[c(1,t) - \hat{c}(1,t)\right] \\
\hat{c}(0,t) &= 0 \\
\frac{\partial \hat{c}}{\partial r}(1,t) - \hat{c}(1,t) &= -q\rho I(t) + p_{10}\left[c(1,t) - \hat{c}(1,t)\right]
\end{aligned}$$

The Concept

$$\tilde{c}(r,t) = \tilde{w}(r,t) - \int_r^1 p(r,s)\tilde{w}(s)ds$$ Backstepping Transformation

$$\frac{\partial \tilde{w}}{\partial t}(r,t) = \varepsilon \frac{\partial^2 \tilde{w}}{\partial r^2}(r,t) + \lambda \tilde{w}(r,t)$$ Exp. Stable Target System

$$\tilde{w}(0,t) = 0$$

$$\frac{\partial \tilde{w}}{\partial r}(1,t) = \frac{1}{2}\tilde{w}(1,t)$$

$$W(t) = \frac{1}{2}\int_0^1 \tilde{w}^2(x,t)dx$$

$$\dot{W}(t) \leq -\gamma W(t)$$

Backstepping PDE Estimator

Estimator: $\hat{c}(r,t)$

$$\begin{aligned}
\frac{\partial \hat{c}}{\partial t}(r,t) &= \varepsilon \frac{\partial^2 \hat{c}}{\partial r^2}(r,t) + p_1(r)\left[c(1,t) - \hat{c}(1,t)\right] \\
\hat{c}(0,t) &= 0 \\
\frac{\partial \hat{c}}{\partial r}(1,t) - \hat{c}(1,t) &= -q\rho I(t) + p_{10}\left[c(1,t) - \hat{c}(1,t)\right]
\end{aligned}$$

Kernel PDE

$$p(r,s) : \mathcal{D} \to \mathbb{R}, \qquad \mathcal{D} = \{(r,s) | 0 \le r \le s \le 1\}$$

$$p_{rr}(r,s) - p_{ss}(r,s) = \frac{\lambda}{\varepsilon} p(r,s) \qquad p_1(r) = -p_s(r,1) - \frac{1}{2} p(r,1)$$

$$p(0,s) = 0 \qquad p_{10} = \frac{3 - \lambda/\varepsilon}{2}$$

$$p(r,r) = \frac{\lambda}{2\varepsilon} r$$

Backstepping PDE Estimator

Estimator: $\hat{c}(r,t)$

$$\begin{aligned}
\frac{\partial \hat{c}}{\partial t}(r,t) &= \varepsilon \frac{\partial^2 \hat{c}}{\partial r^2}(r,t) + p_1(r)\left[c(1,t) - \hat{c}(1,t)\right] \\
\hat{c}(0,t) &= 0 \\
\frac{\partial \hat{c}}{\partial r}(1,t) - \hat{c}(1,t) &= -q\rho I(t) + p_{10}\left[c(1,t) - \hat{c}(1,t)\right]
\end{aligned}$$

Explicit Solution to Estimator Gains

$$p_1(r) = \frac{-\lambda r}{2\varepsilon z}\left[I_1(z) - \frac{2\lambda}{\varepsilon z} I_2(z)\right] \qquad \text{where} \quad z = \sqrt{\frac{\lambda}{\varepsilon}(r^2-1)}$$

$$p_{10} = \frac{1}{2}\left(3 - \frac{\lambda}{\varepsilon}\right)$$

The SOH Estimation Problem

Problem Statement

Estimate physical parameters from measurements $I(t), V(t)$ and SPM

The SOH Estimation Problem

Problem Statement

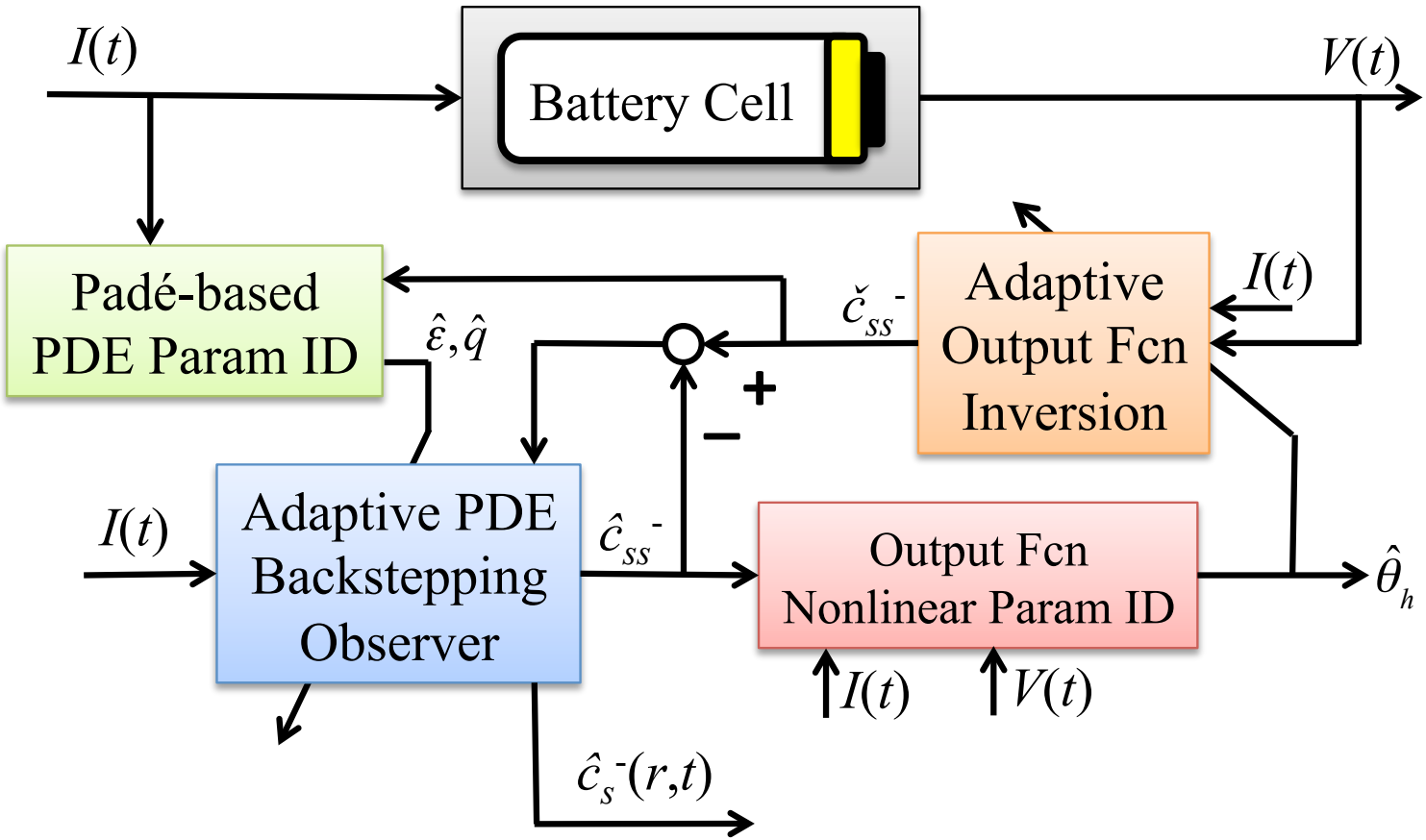
Estimate physical parameters from measurements $I(t), V(t)$ and SPM

Relate uncertain parameters to SOH-related concepts

- Capacity fade
- Power fade

Adaptive Observer

Combined State & Parameter Estimation



Output Function Nonlinear Parameter ID

Nonlinearly Parameterized Output

$$V(t) = h(c_{ss}^{-}(t), I(t); \theta)$$

- θ contains many parameters
- Linear dependence b/w parameters?

Output Function Nonlinear Parameter ID

Nonlinearly Parameterized Output

$$V(t) = h(c_{ss}^{-}(t), I(t); \theta)$$

- θ contains many parameters
- Linear dependence b/w parameters?

Identifiability Analysis

- Linearly independent parameter subset : $\theta_h = [n_{Li}, R_f]^T$
  - n_{Li} : Moles of cyclable Li (Capacity Fade)
  - R_f : Resistance of current collectors, electrolyte, etc. (Power Fade)

Output Function Nonlinear Parameter ID

Nonlinearly Parameterized Output

$$V(t) = h(c_{ss}^{-}(t), I(t); \theta)$$

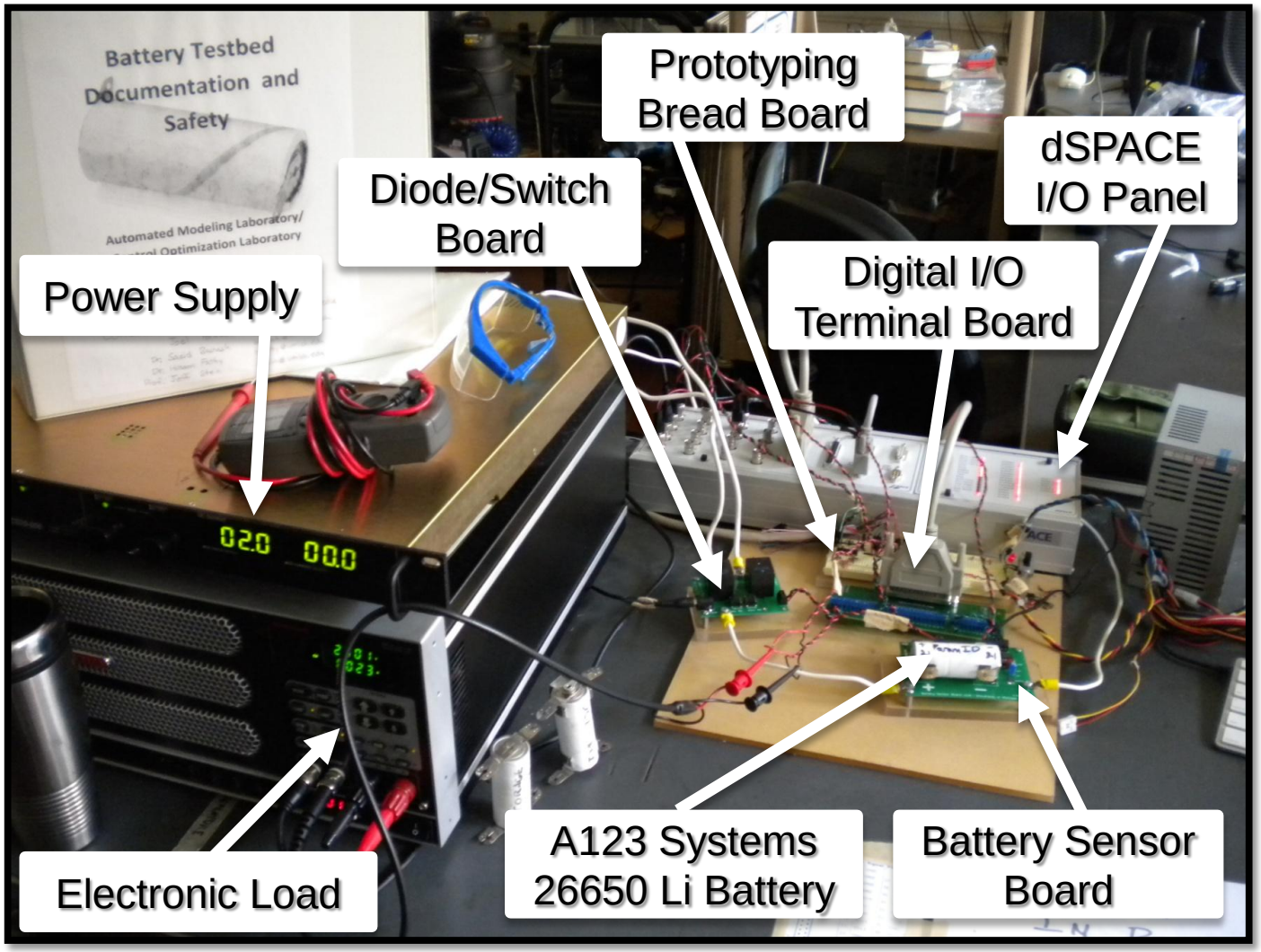
- θ contains many parameters
- Linear dependence b/w parameters?

Identifiability Analysis

- Linearly independent parameter subset : $\theta_h = [n_{Li}, R_f]^T$
  - n_{Li} : Moles of cyclable Li (Capacity Fade)
  - R_f : Resistance of current collectors, electrolyte, etc. (Power Fade)

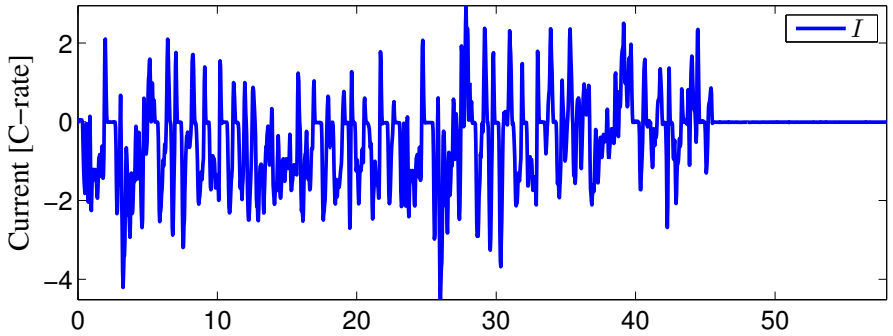
Apply nonlinear recursive least squares to θ_h

Custom-Built Battery-in-the-Loop Testbed



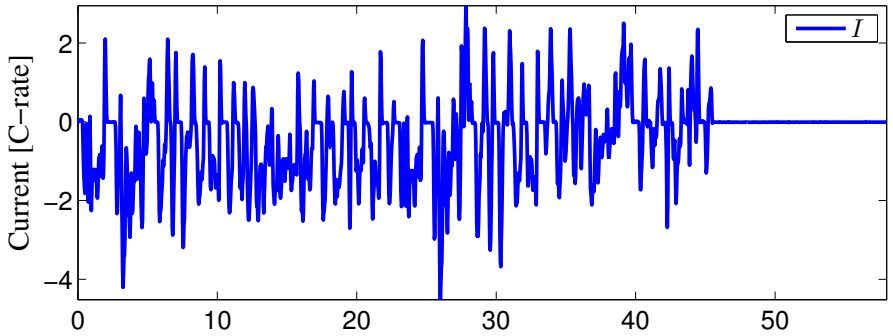
Results

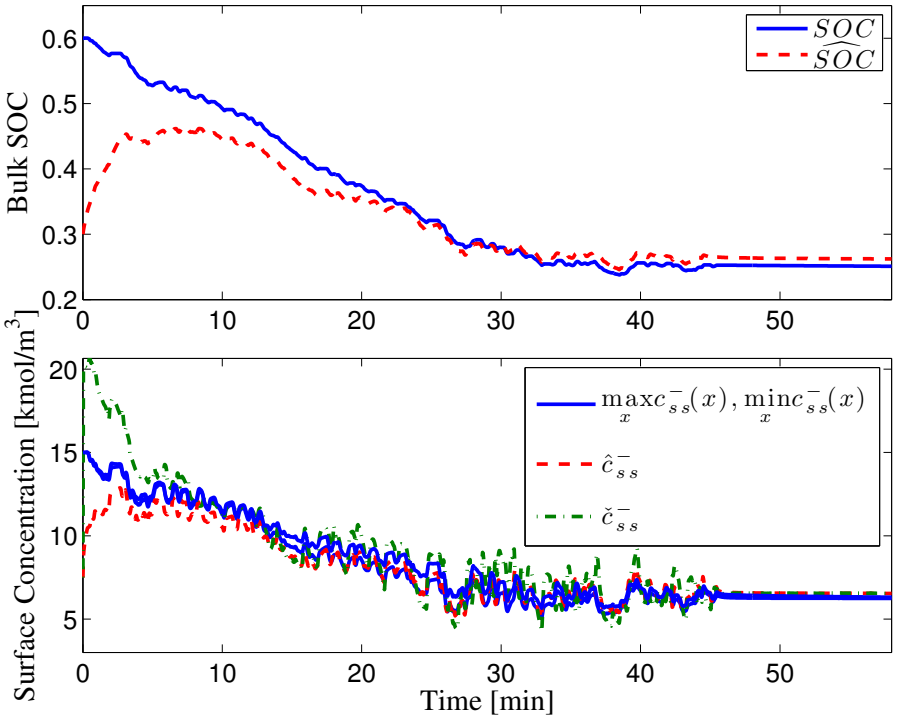
UDDS Drive Cycle Input



Results

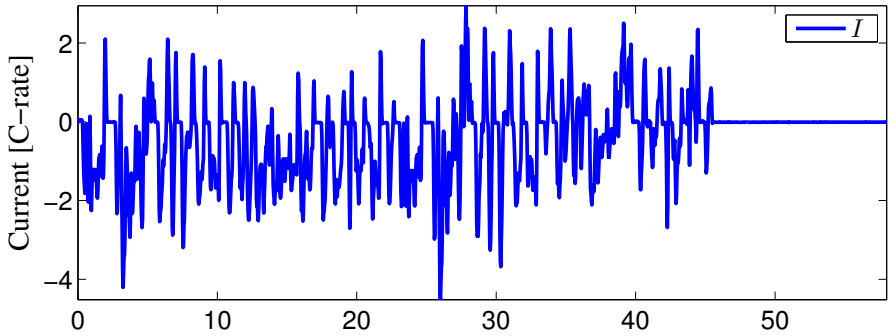
UDDS Drive Cycle Input

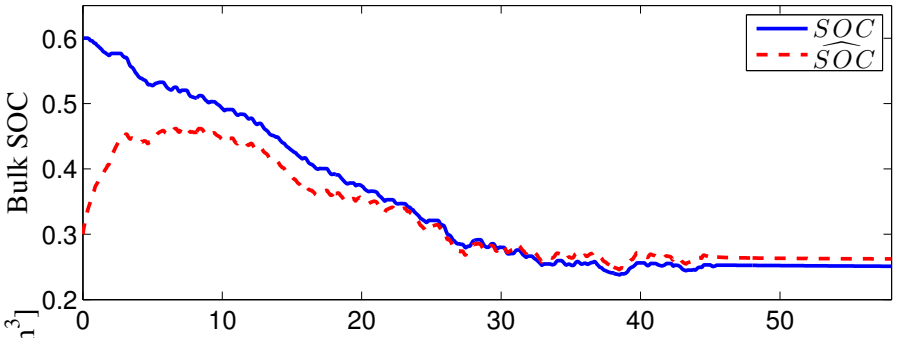


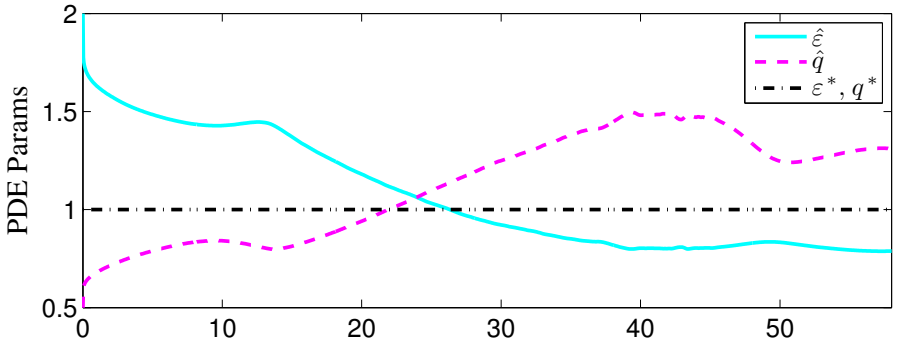


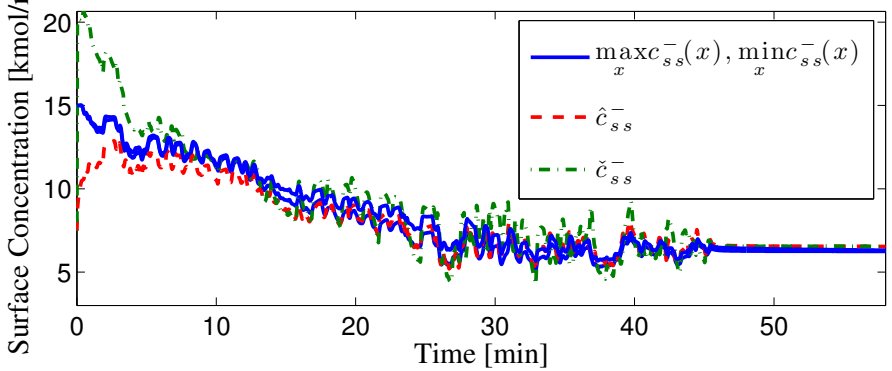
Results

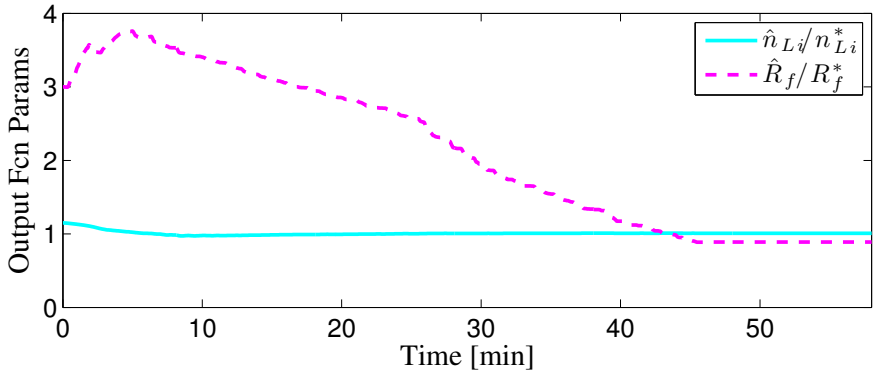
UDDS Drive Cycle Input





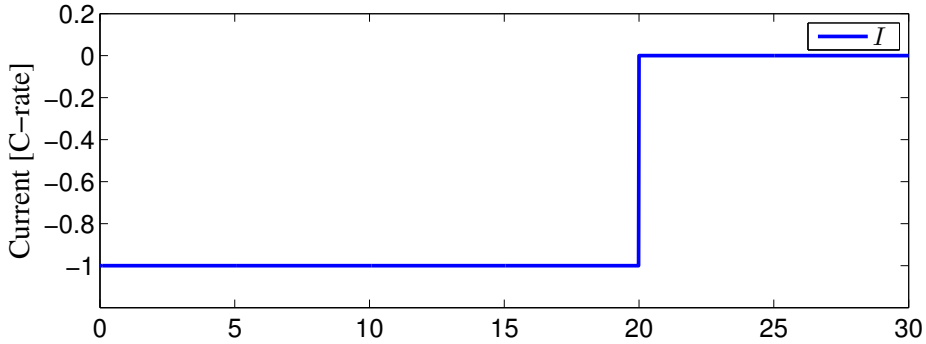


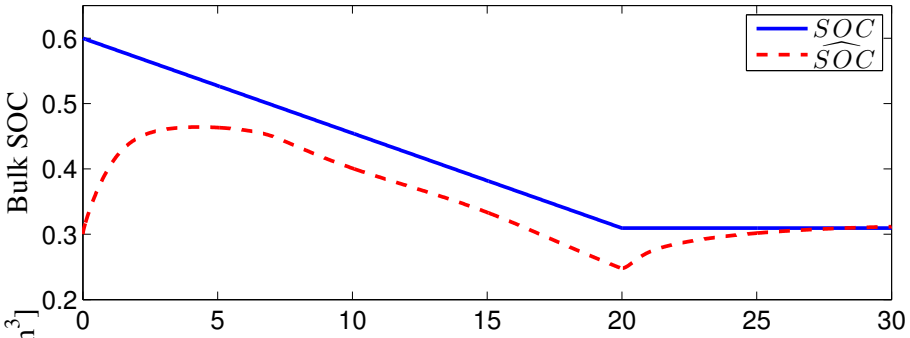


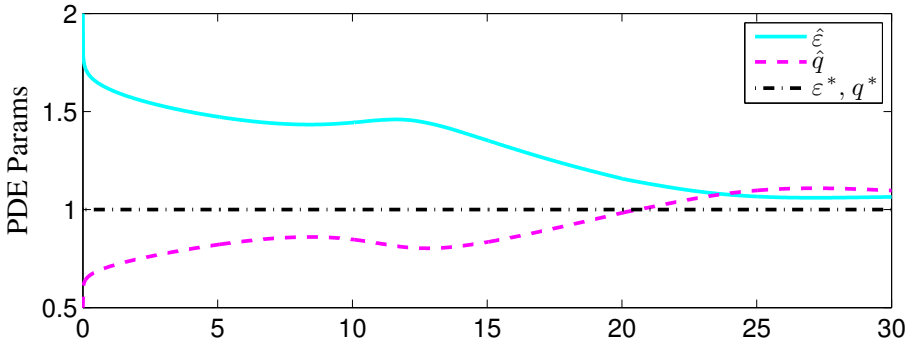


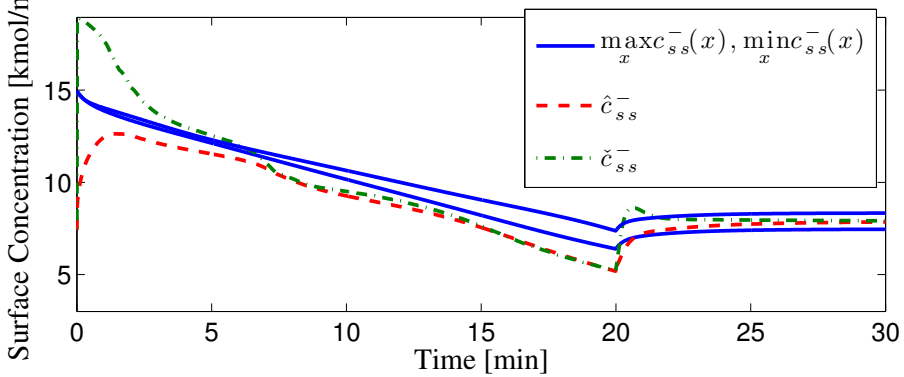
Results

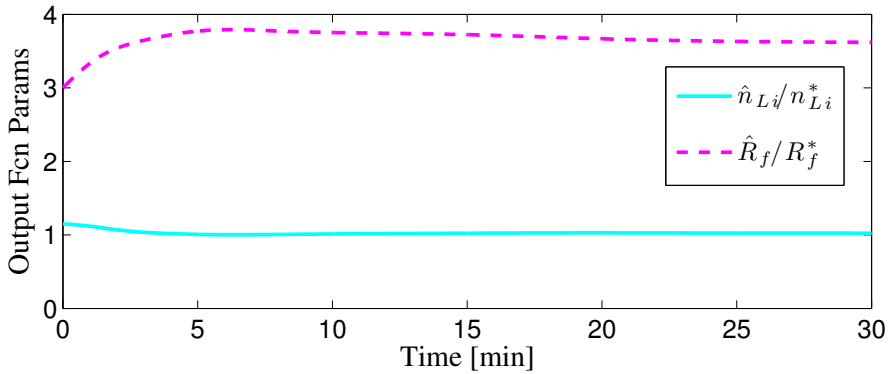
Constant 1C Discharge





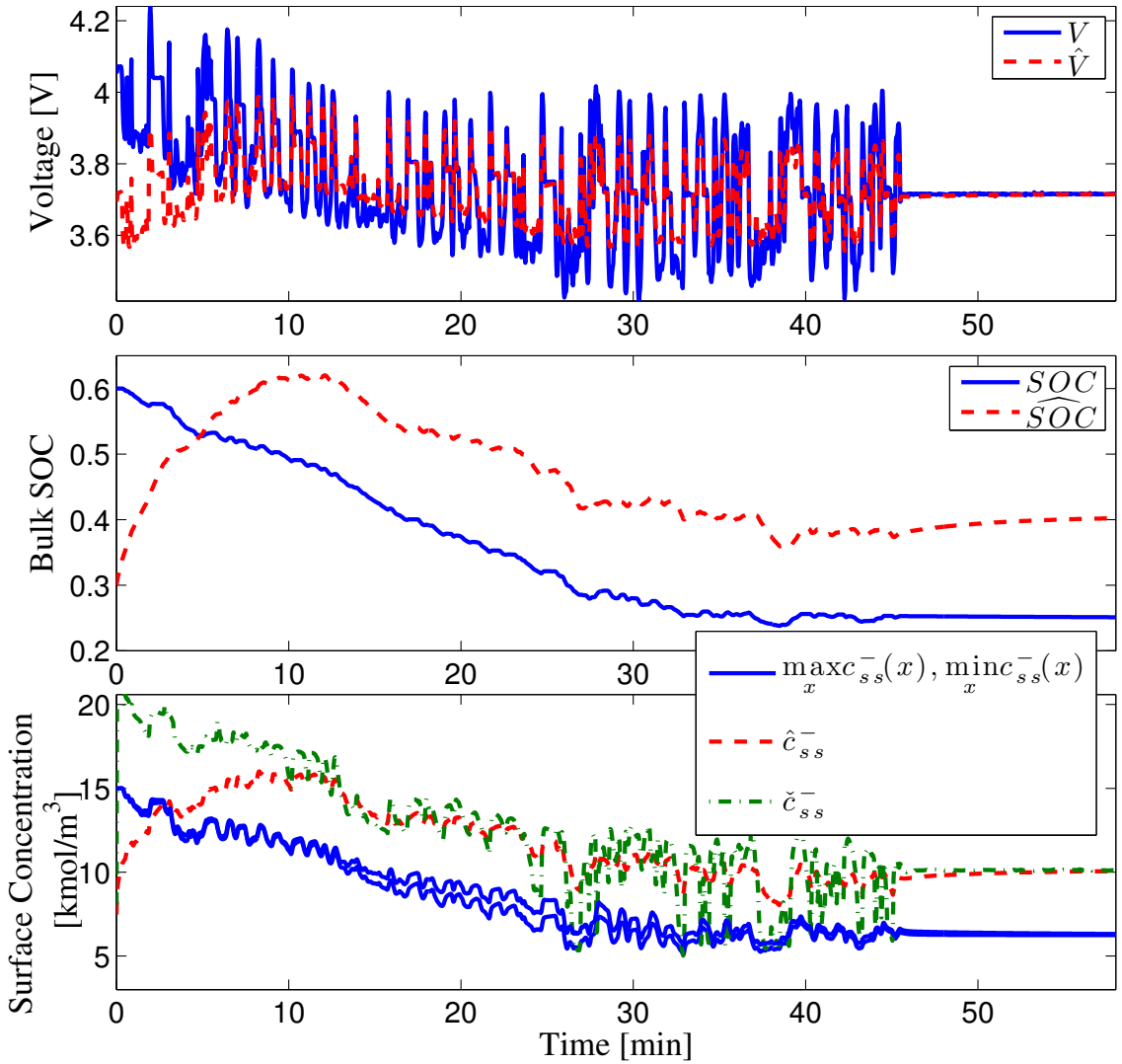






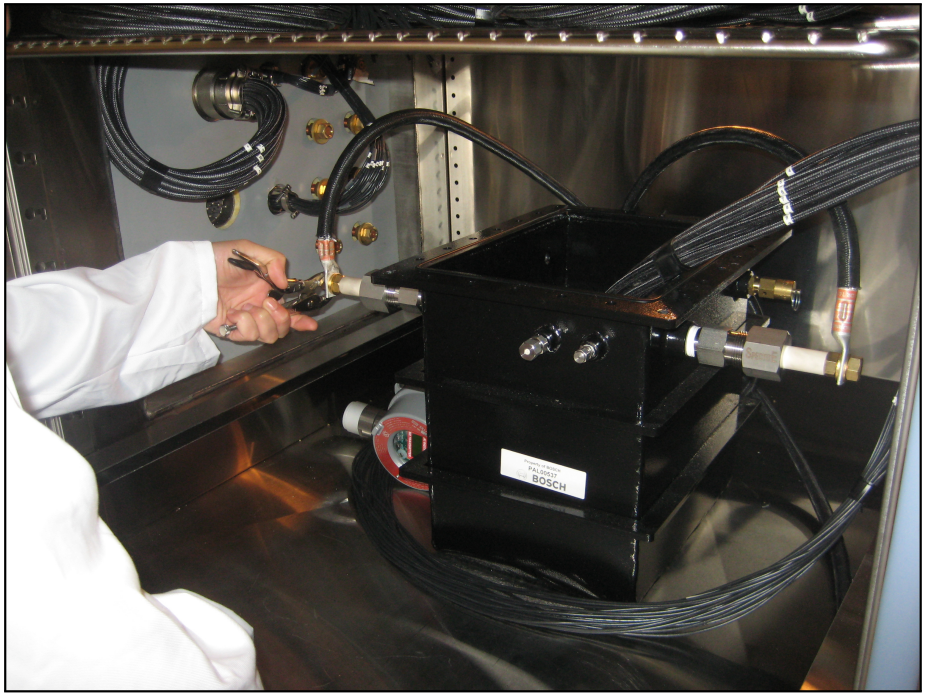
Results

No Parameter Adaption - Bias in State Estimates



Experimental Testing | ARPA-E AMPED Program





Outline

1. Batteries
   - [Electrochemical Modeling] Incorporating Physics
   - [SOC/SOH Estimation] Looking Inside w/ Models, Meas., and Math
   - [Constrained Control] Operate at the Limits, Safely
2. Demand Response in Smart Grids
3. Future

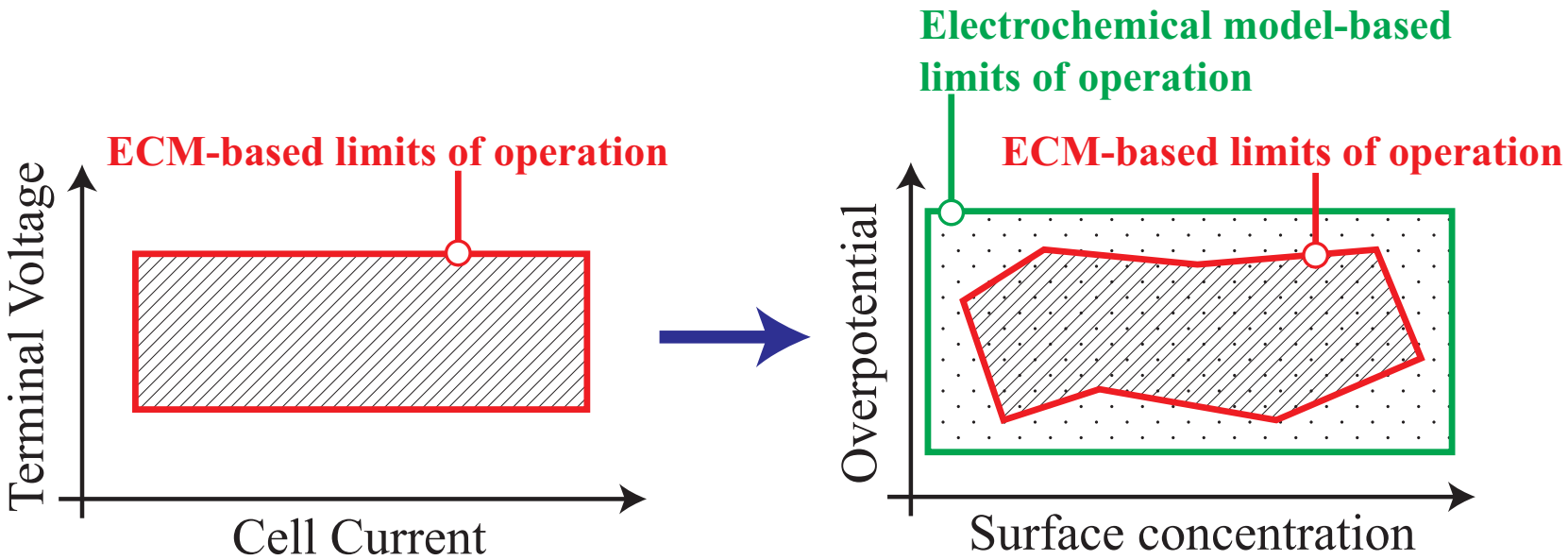
Operate Batteries at their Physical Limits



Operate Batteries at their Physical Limits

Problem Statement

Given accurate state estimates, govern the electric current such that safe operating constraints are satisfied.

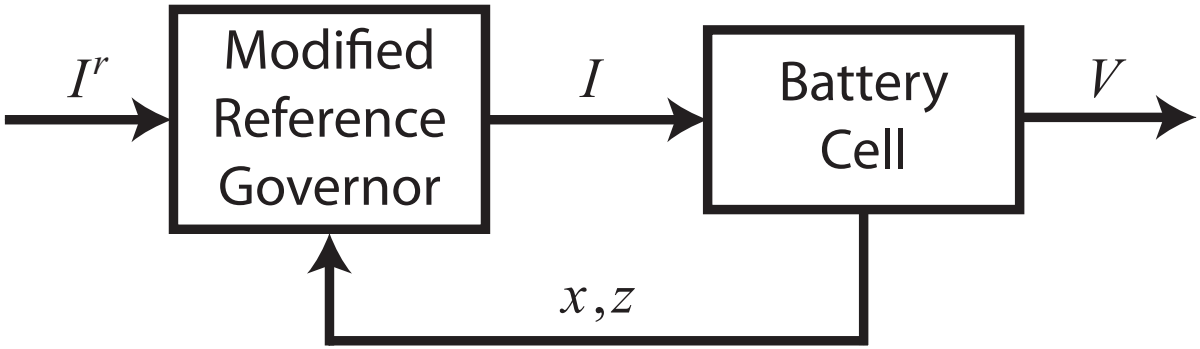


Constraints

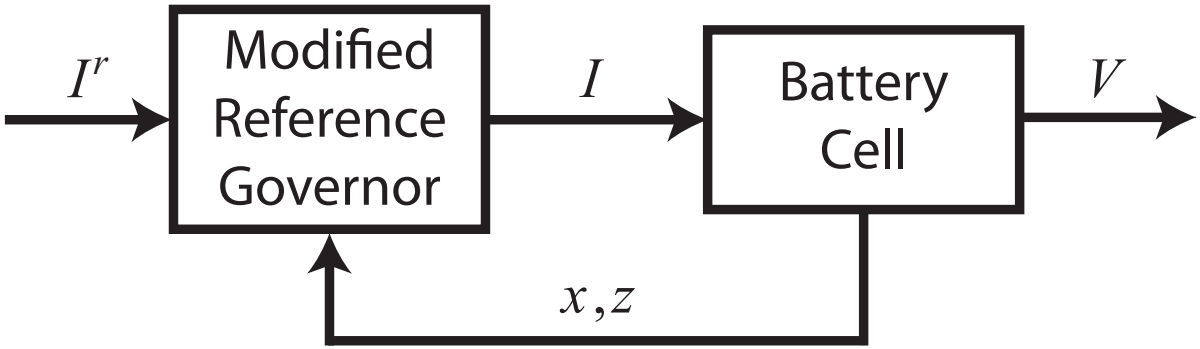
Variable	Definition	Constraint
$I(t)$	Current	Power electronics limits
$c_s^{\pm}(x,r,t)$	Li concentration in solid	Saturation/depletion
$\frac{\partial c_s^{\pm}}{\partial r}(x,r,t)$	Li concentration gradient	Diffusion-induced stress
$c_e(x,t)$	Li concentration in electrolyte	Saturation/depletion
$T(t)$	Temperature	High/low temps accel. aging
$\eta_s(x,t)$	Side-rxn overpotential	Li plating, dendrite formation

Each variable, y, must satisfy $y_{\min} \leq y \leq y_{\max}$.

The Algorithm: Modified Reference Governor (MRG)



The Algorithm: Modified Reference Governor (MRG)

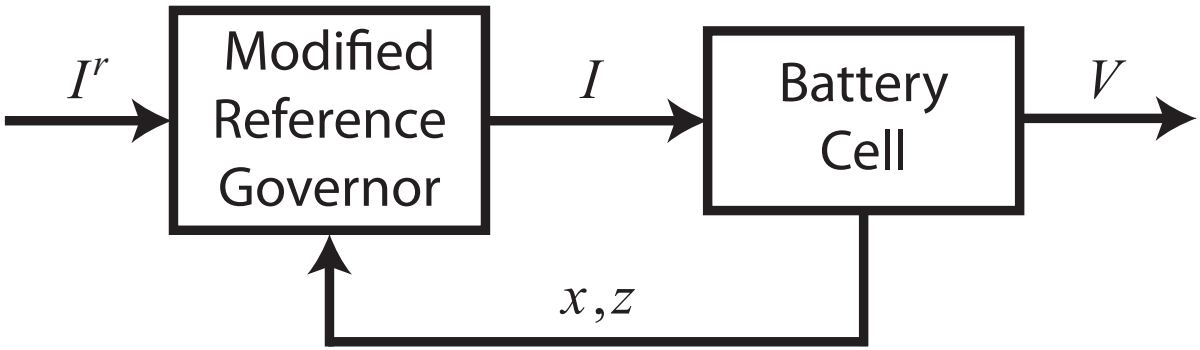


MRG Equations

$$I[k+1] = \beta^*[k] I^r[k], \qquad \beta^* \in [0,1],$$

$$\beta^*[k] = \max\{\beta \in [0,1] : (x(t), z(t)) \in \mathcal{O}\}$$

The Algorithm: Modified Reference Governor (MRG)



MRG Equations

$$I[k+1] = \beta^*[k] I^r[k], \qquad \beta^* \in [0,1],$$

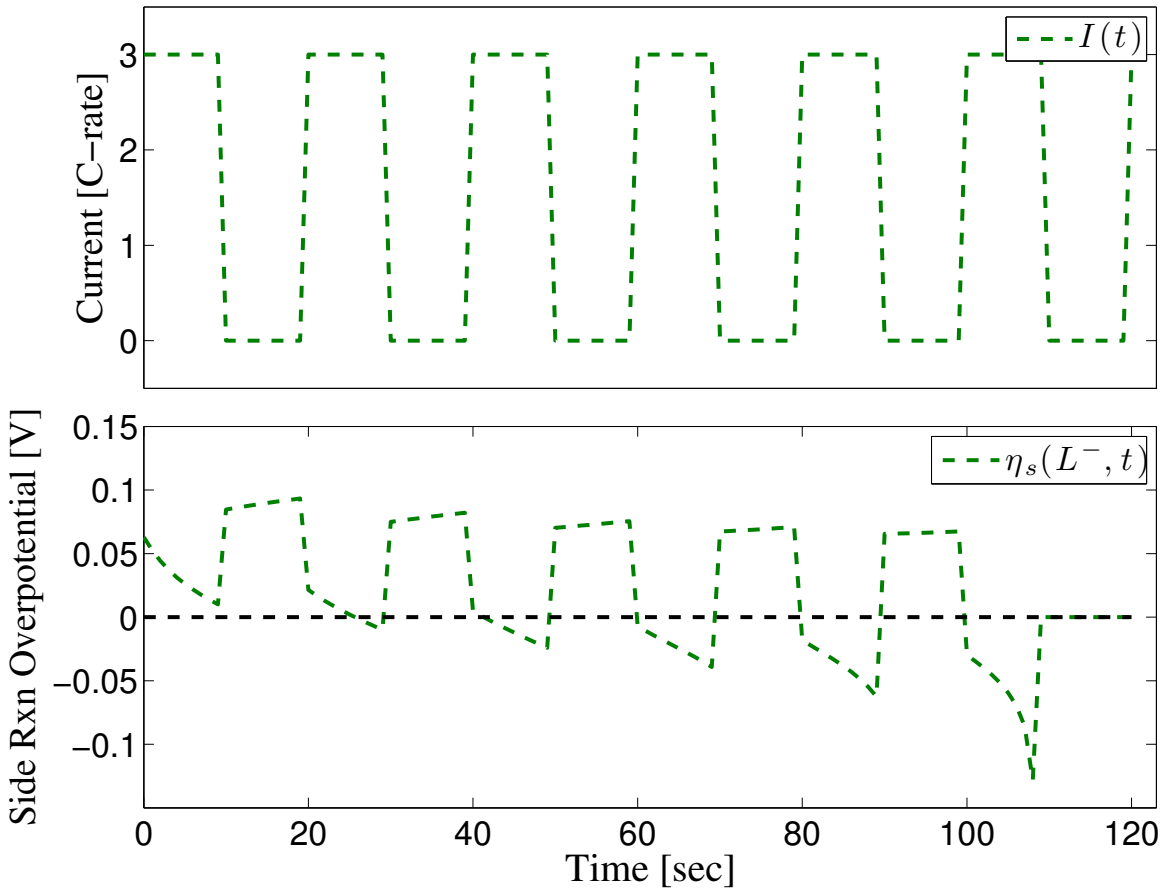
$$\beta^*[k] = \max\{\beta \in [0,1] : (x(t), z(t)) \in \mathcal{O}\}$$

Def'n: Admissible Set $\mathcal{O}$

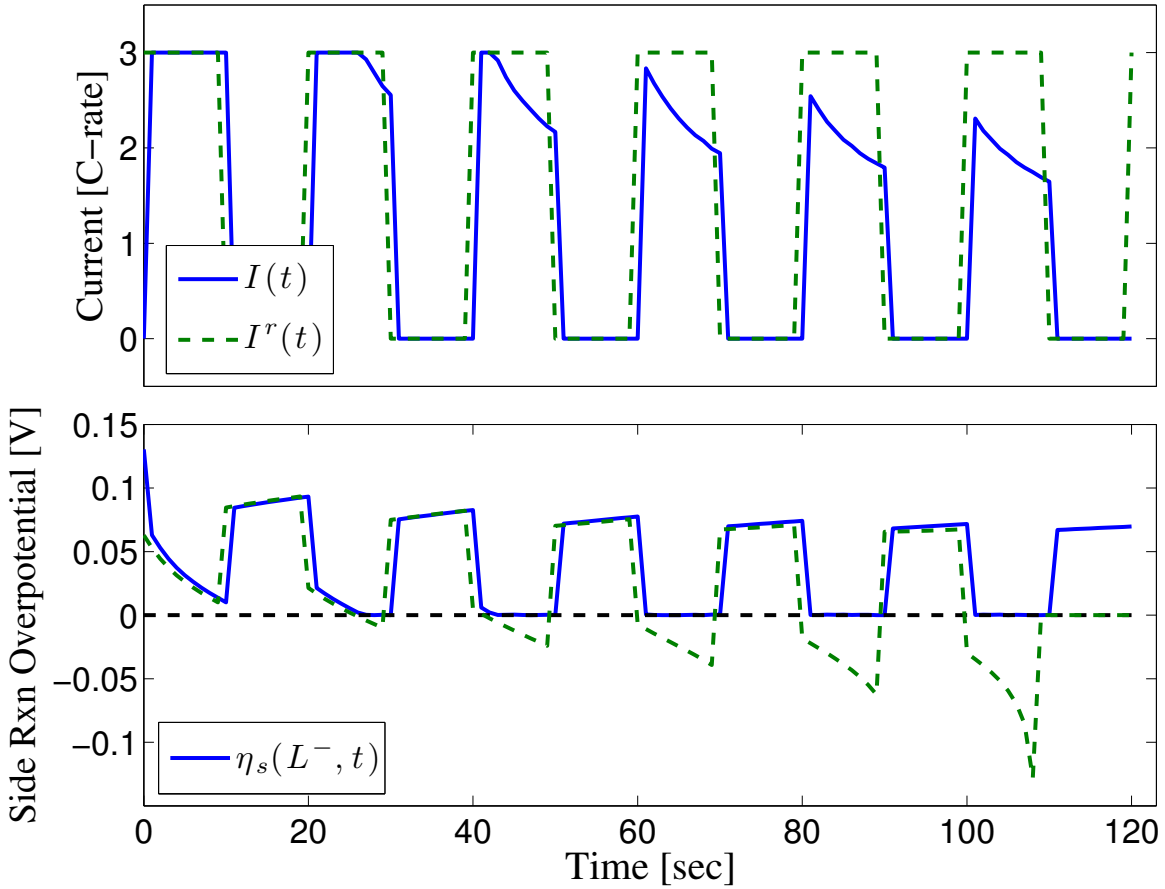
$$\mathcal{O} = \{(x(t), z(t)) : y(\tau) \in \mathcal{Y}, \forall \tau \in [t, t+T_s]\}$$

$$\begin{aligned} \dot{x}(t) &= f(x(t), z(t), \beta I^r) \\ 0 &= g(x(t), z(t), \beta I^r) \\ y(t) &= C_1 x(t) + C_2 z(t) + D \cdot \beta I^r + E \end{aligned}$$

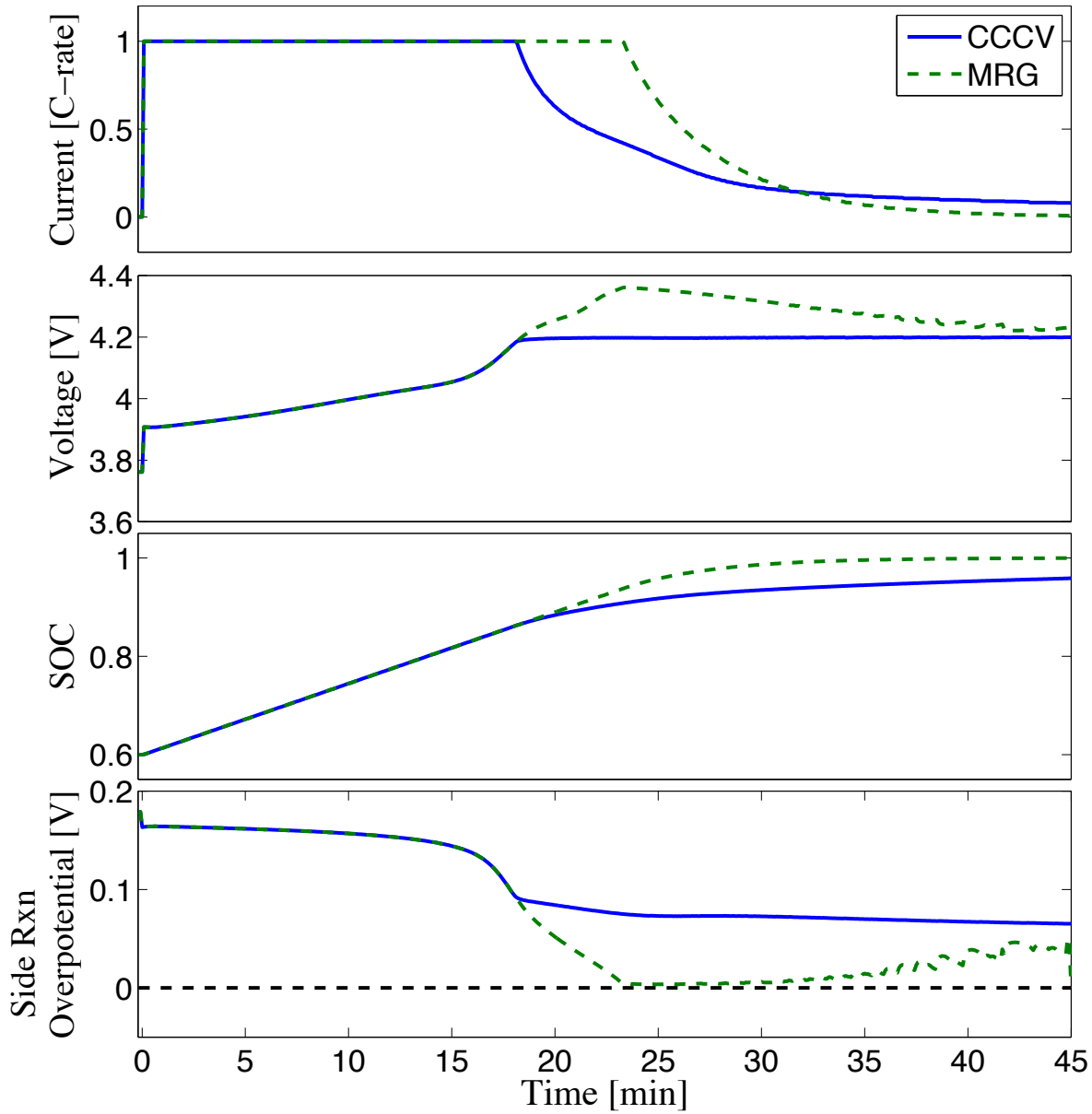
Constrained Control of EChem States



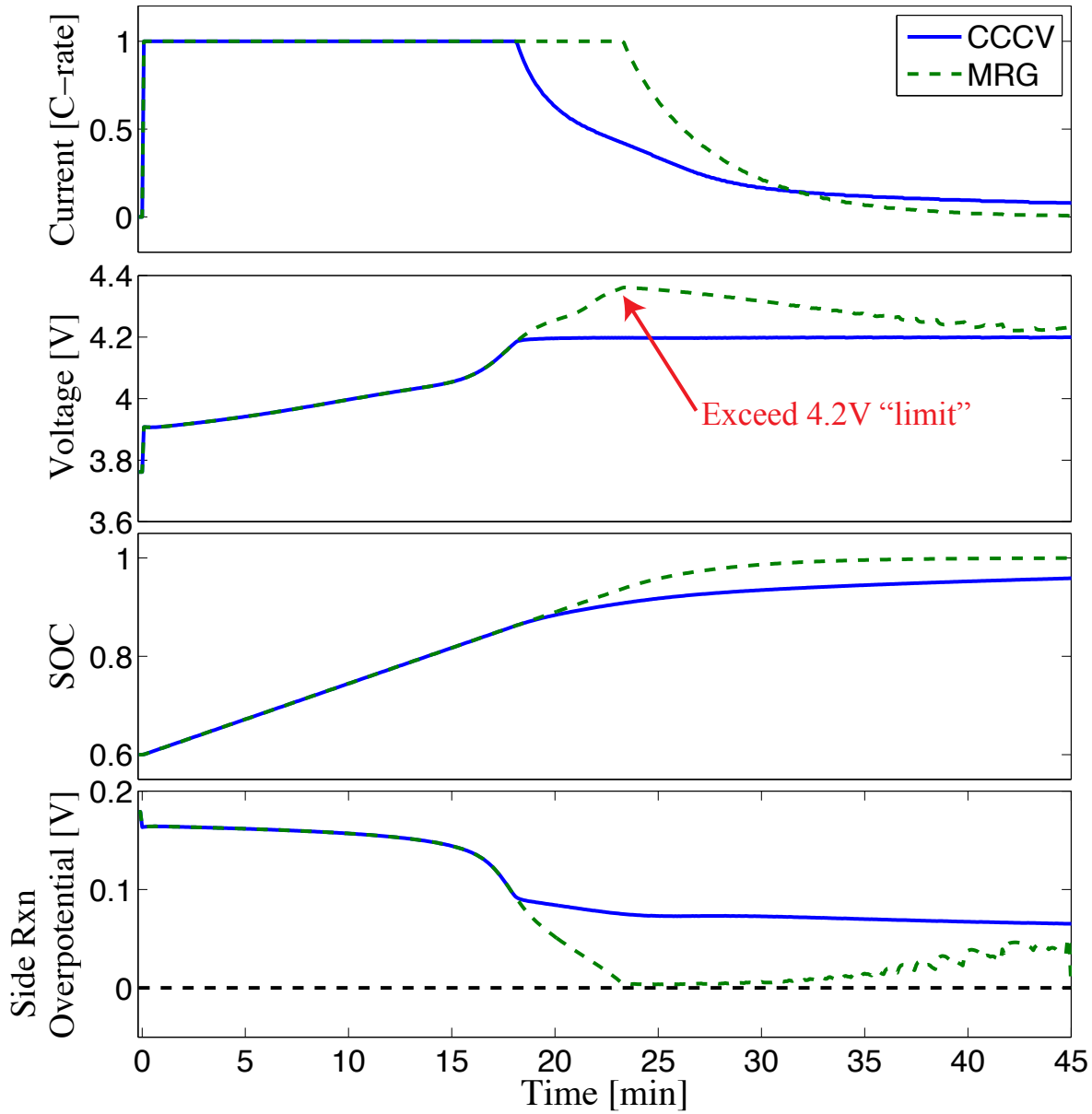
Constrained Control of EChem States



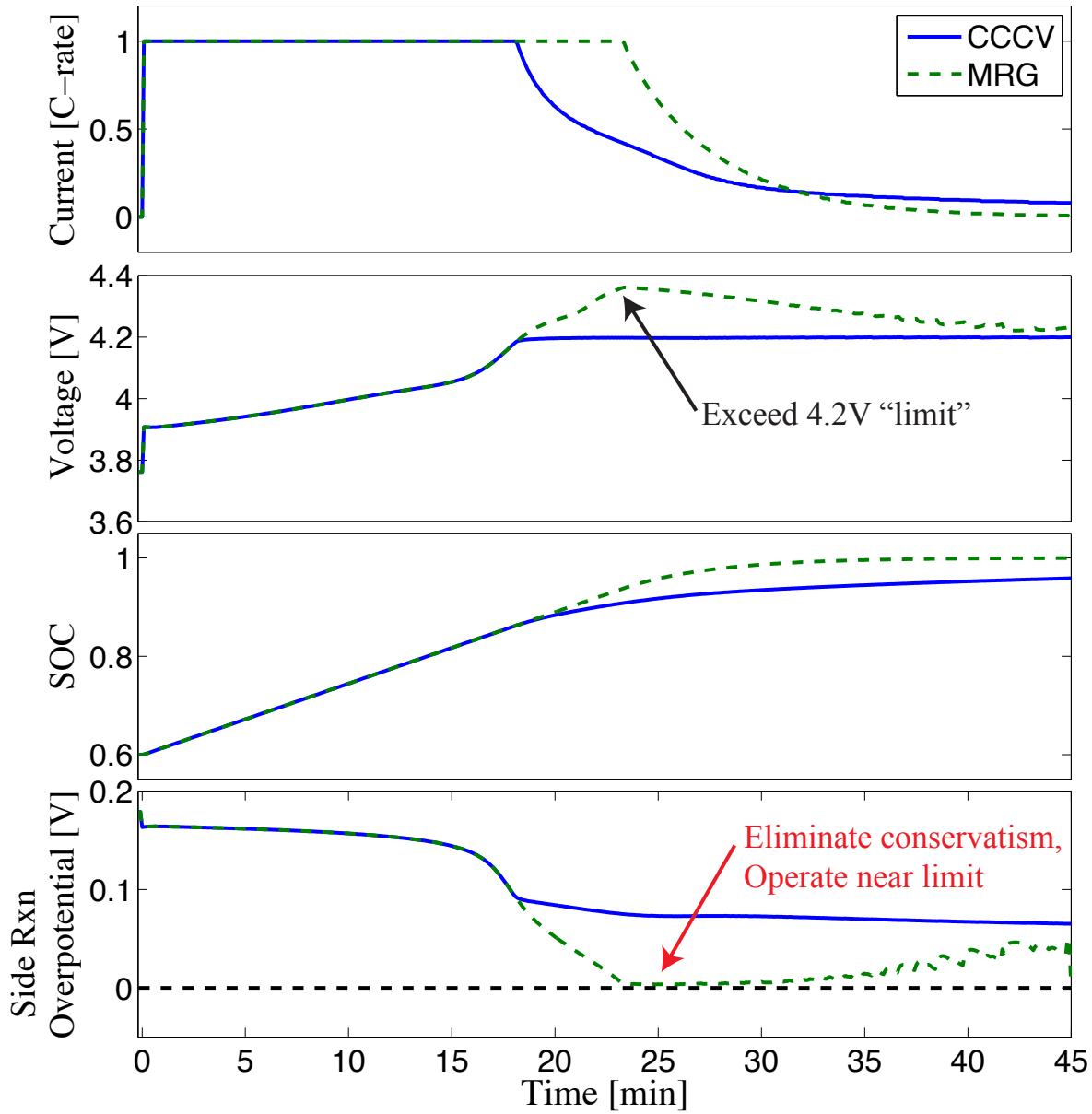
Application to Charging



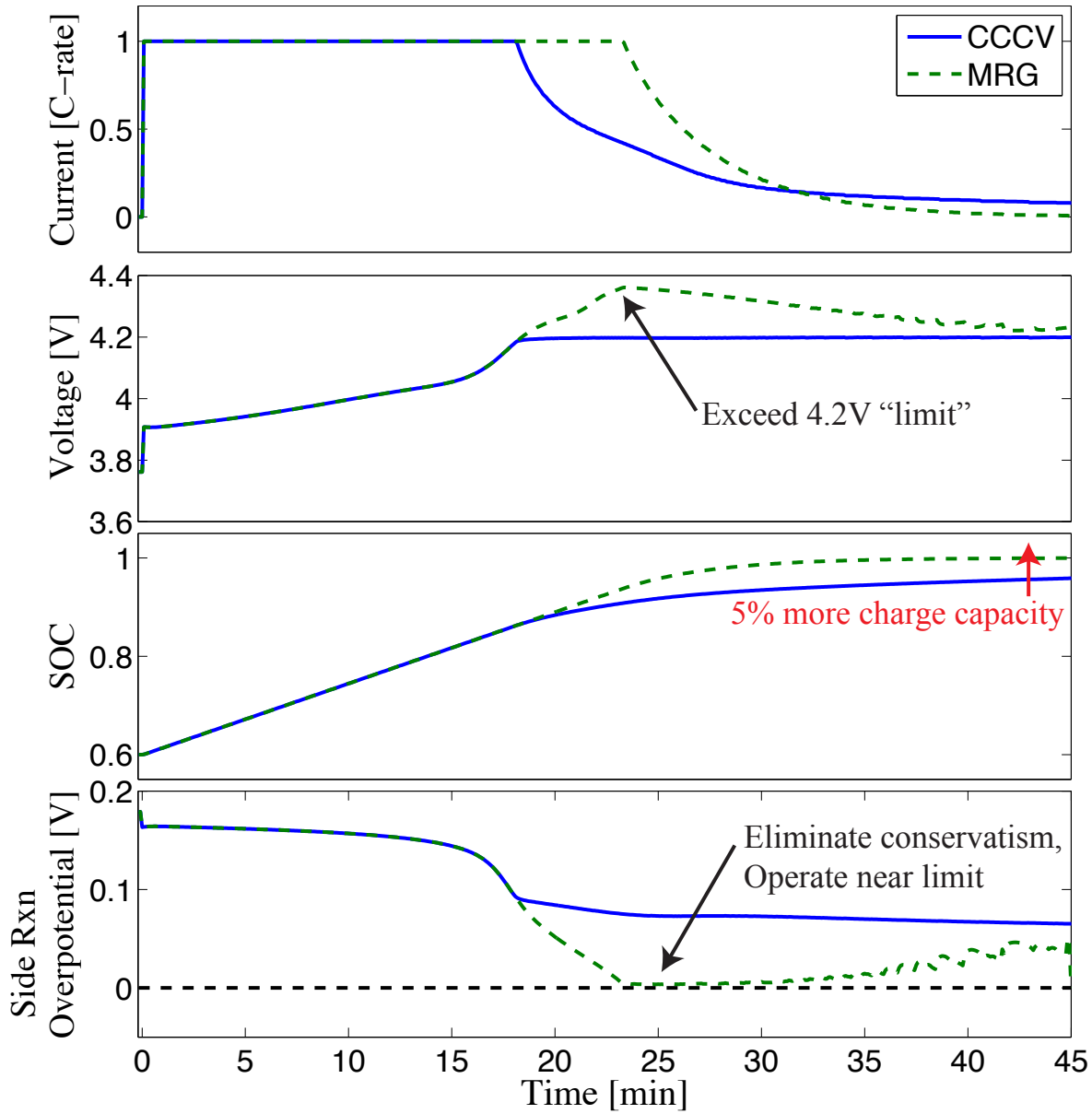
Application to Charging



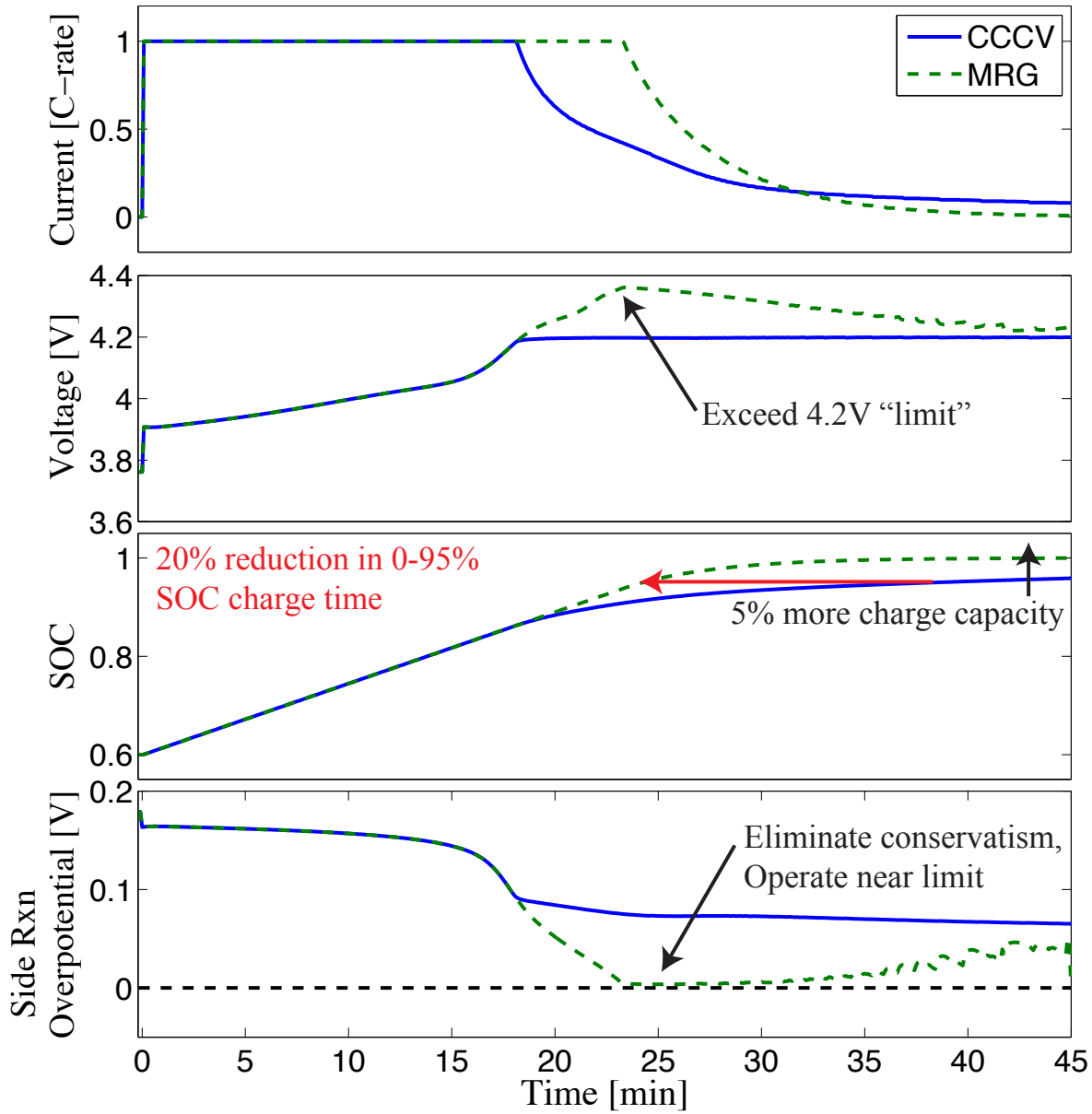
Application to Charging



Application to Charging



Application to Charging

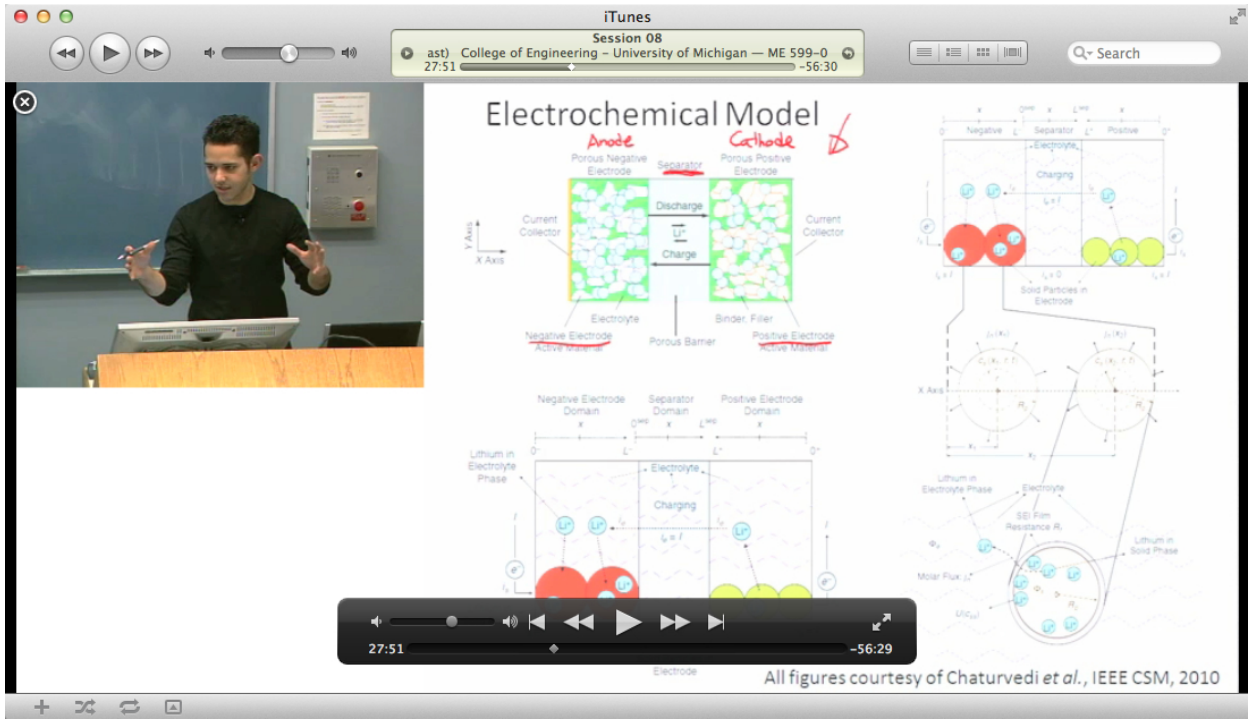


Battery Systems and Control Course

Funded by DOE-ARRA, University of Michigan

Enrollment

- Winter 2010: 59 + 5 distance
- Winter 2011: 50 + 26 distance
- ME, EE, ChemE, CS, Energy Systems, MatSci, Physics, Math
- Undergraduates
- Graduate students
- Professionals
  - Tesla Motors, General Motors, Roush, US Army



Summary of Contributions

Simultaneous SOC/SOH estimation
of physically meaningful variables via electrochemical models,
PDE estimation theory, and adaptive control.

Constrained control of batteries
via an electrochemical model
and reference governors.

Impact through education.

Energy Crisis Solutions

Energy storage	Demand-side management
(e.g., batteries)	(e.g., smart grids)

Energy Crisis Solutions

Energy storage	Demand-side management
(e.g., batteries)	(e.g., smart grids)

Outline

1. Batteries
   - [Electrochemical Modeling] Incorporating Physics
   - [SOC/SOH Estimation] Looking Inside w/ Models, Meas., and Math
   - [Constrained Control] Operate at the Limits, Safely
2. Demand Response in Smart Grids
3. Future

The Renewable Integration Problem

Needs: 33% renewables in CA by 2020

The Renewable Integration Problem

Needs: 33% renewables in CA by 2020

Obstacle: Must install 4 GW reserve capacity to support variability

The Renewable Integration Problem

Needs: 33% renewables in CA by 2020

Obstacle: Must install 4 GW reserve capacity to support variability

Some Interesting Facts

Thermostatically Controlled Loads (TCLs)	50% of U.S. electricity consumption is TCLs
	11% of thermostats are programmed
	Comfort is loosely coupled with control

The Renewable Integration Problem

Needs: 33% renewables in CA by 2020

Obstacle: Must install 4 GW reserve capacity to support variability

Some Interesting Facts

Thermostatically Controlled Loads (TCLs)	50% of U.S. electricity consumption is TCLs
	11% of thermostats are programmed
	Comfort is loosely coupled with control

The Punchline

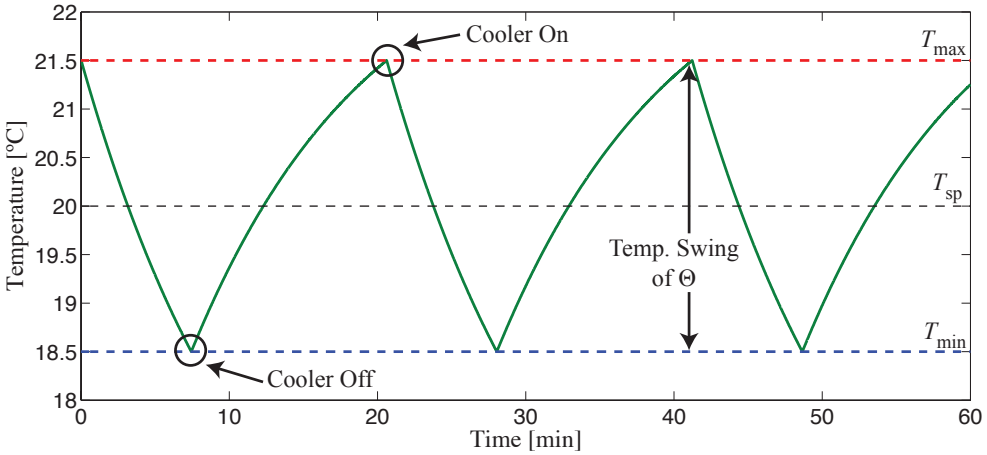
Flexible loads (e.g. TCLs) can absorb variability in renewable generation

Modeling Aggregations of TCLs

Individual TCL models

⇓

(Tens of) Thousands of hybrid ODEs

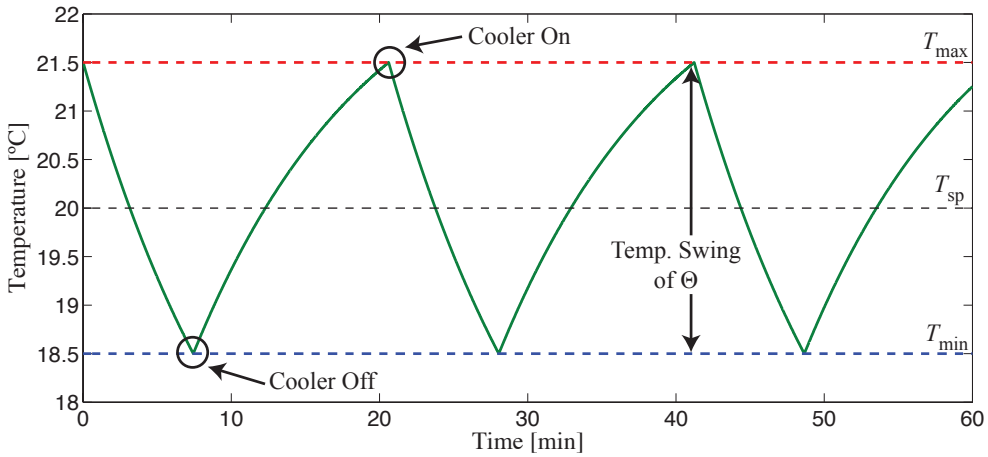


Modeling Aggregations of TCLs

Individual TCL models

⇓

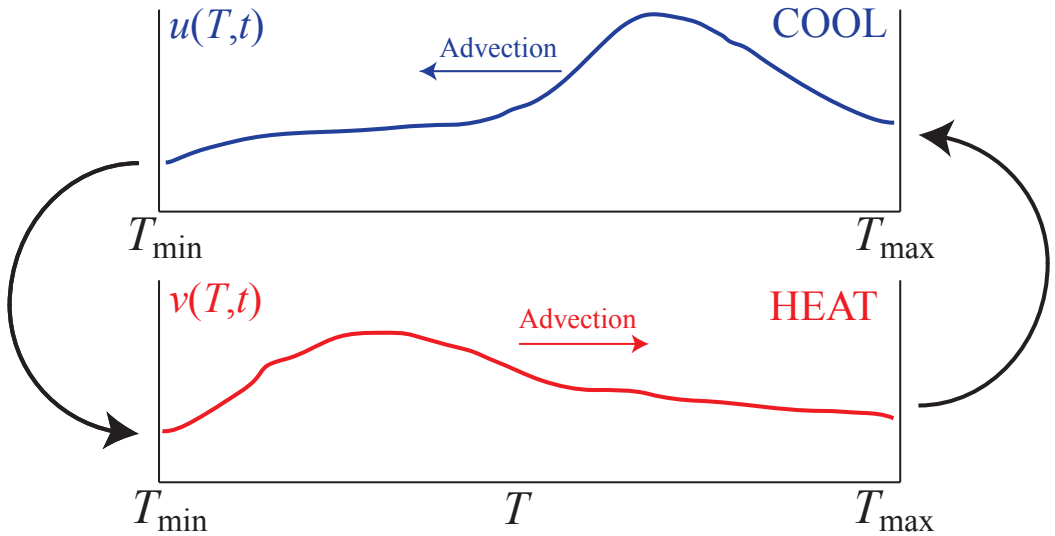
(Tens of) Thousands of hybrid ODEs



Model **aggregations** of TCLs

⇓

Two coupled linear PDEs

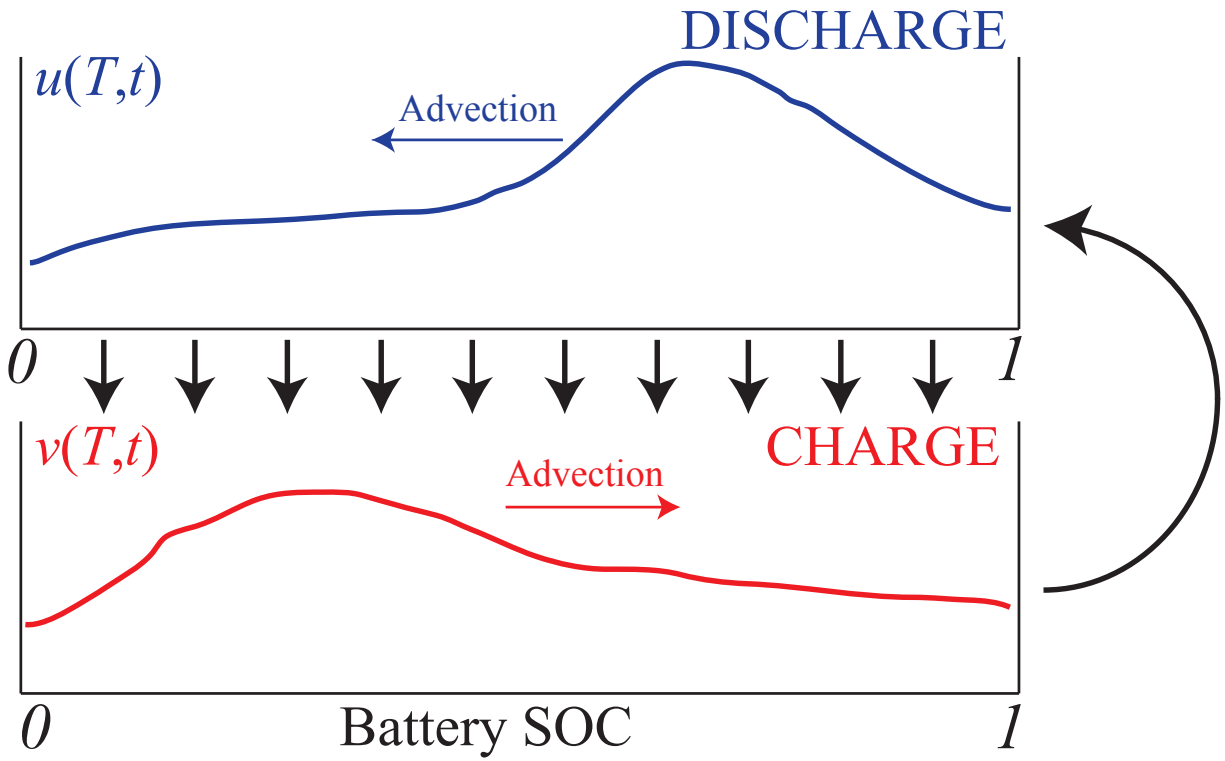


$u(T,t)$	# TCLs/°C, in COOL state, @ temp T, time t
$v(T,t)$	# TCLs/°C, in HEAT state, @ temp T, time t

Modeling Aggregated PEVs

Main Idea: Mathematically model as coupled linear PDEs

$u(T,t)$	# PEVs / SOC, in DISCHARGE state, @ SOC x, time t
$v(T,t)$	# PEVs / SOC, in CHARGE state, @ SOC x, time t



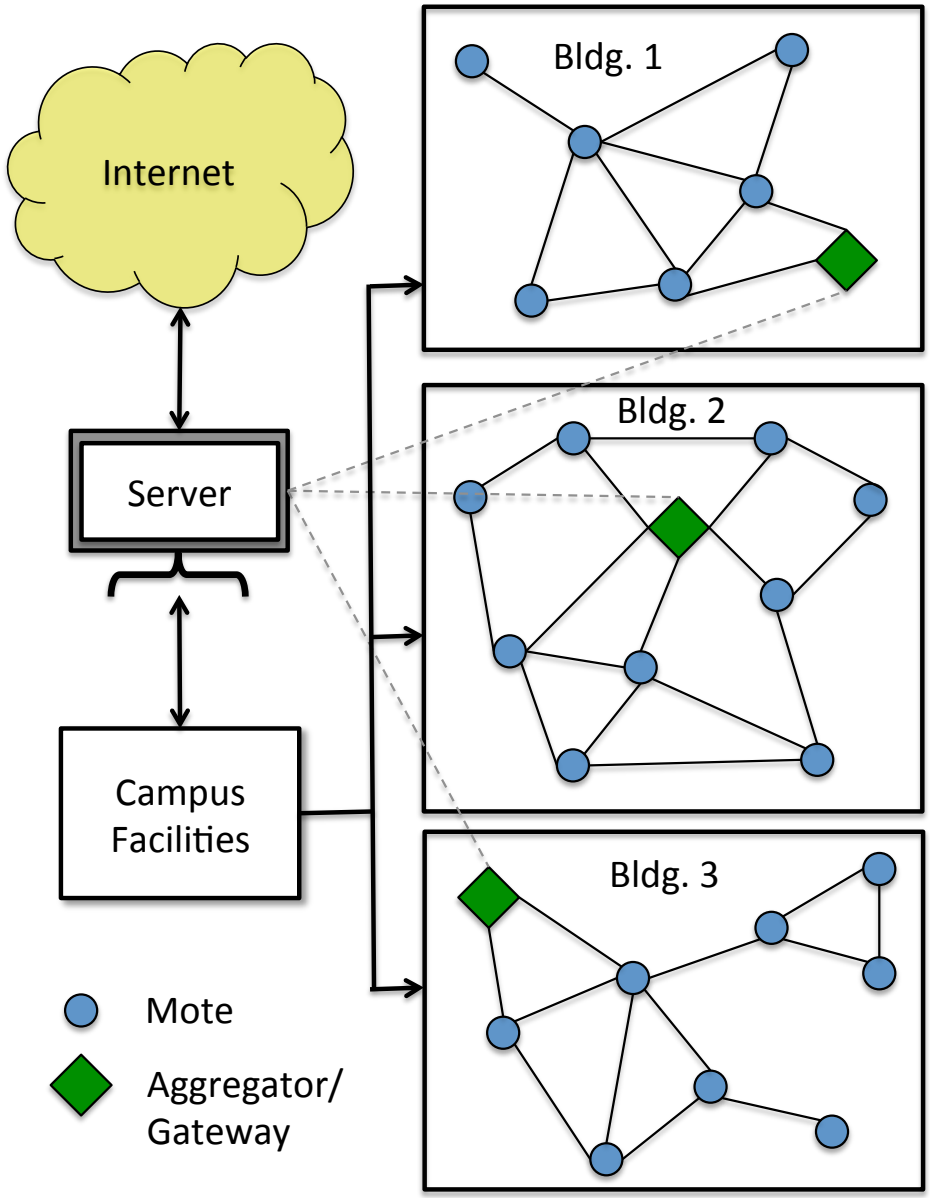
University Campus: A Living Laboratory

Goal: Smart Campus

1. Deploy temp. wireless sensor network
2. Verify models and estimation algorithms
3. Derive control algorithms
4. Implement via campus facilities & management



Libelium Waspmotes and Meshlium Gateway



Outline

1. Batteries
   - [Electrochemical Modeling] Incorporating Physics
   - [SOC/SOH Estimation] Looking Inside w/ Models, Meas., and Math
   - [Constrained Control] Operate at the Limits, Safely
2. Demand Response in Smart Grids
3. Future

Future: EChem-based Battery Management Systems

Vision: Enhanced energy, power, chg times, life from existing batts.

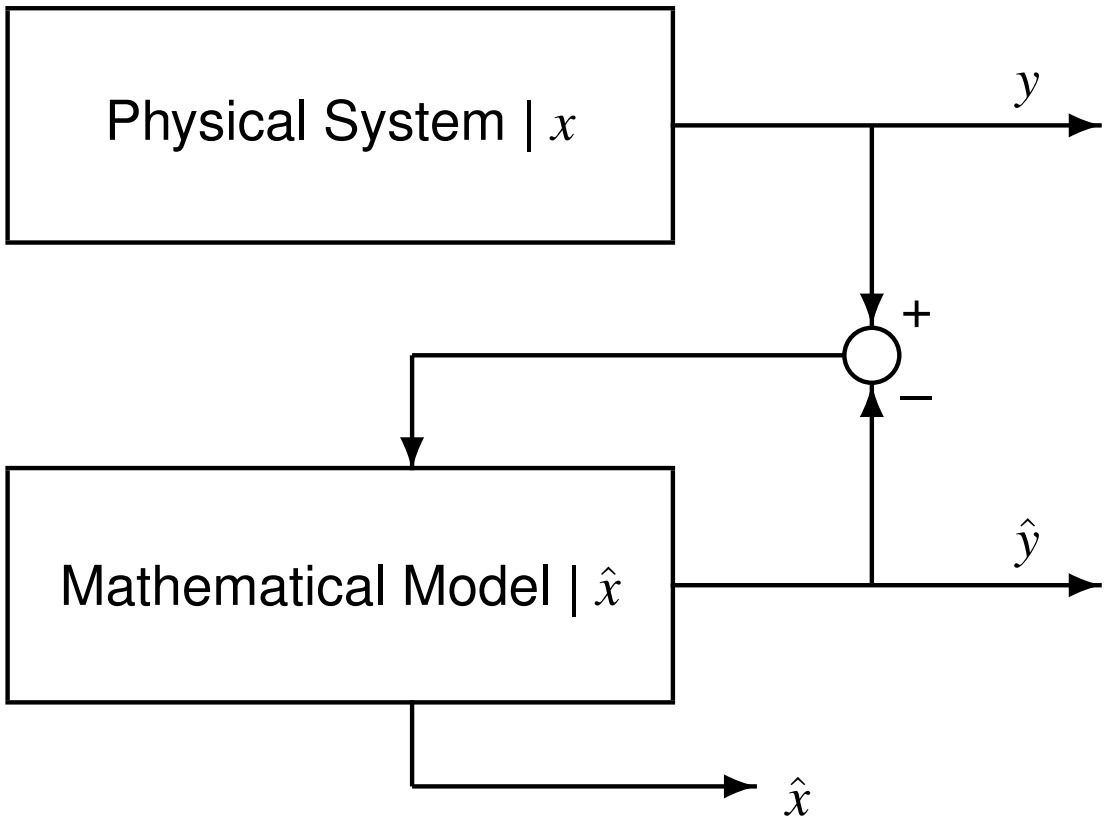
Open technical problems for BMS:
(1) State observability

Future: EChem-based Battery Management Systems

Vision: Enhanced energy, power, chg times, life from existing batts.

Open technical problems for BMS:

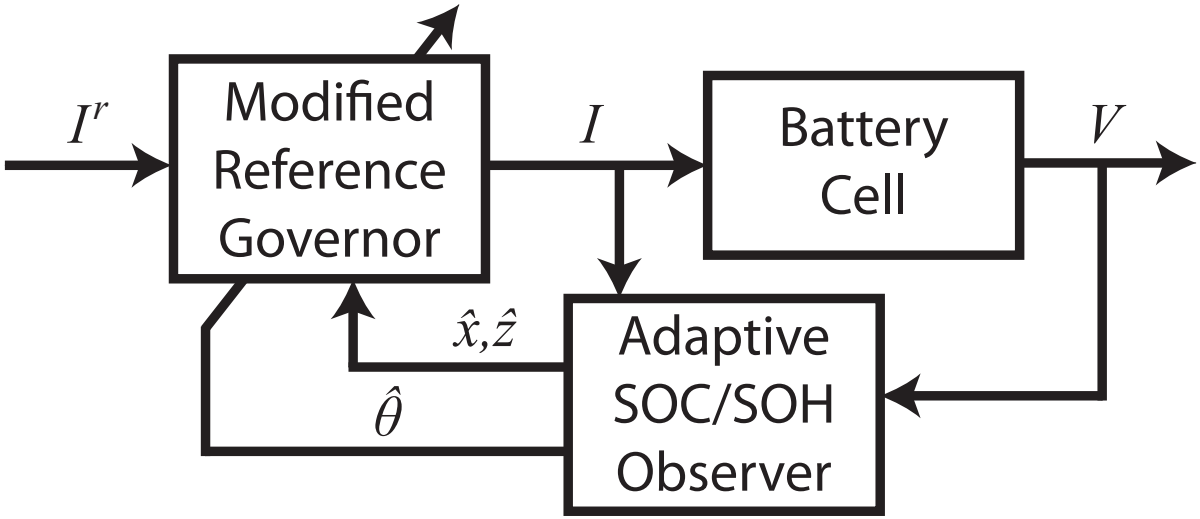
(1) State observability



Future: EChem-based Battery Management Systems

Vision: Enhanced energy, power, chg times, life from existing batts.

Open technical problems for BMS:
(1) State observability
(2) Output feedback



Future: EChem-based Battery Management Systems

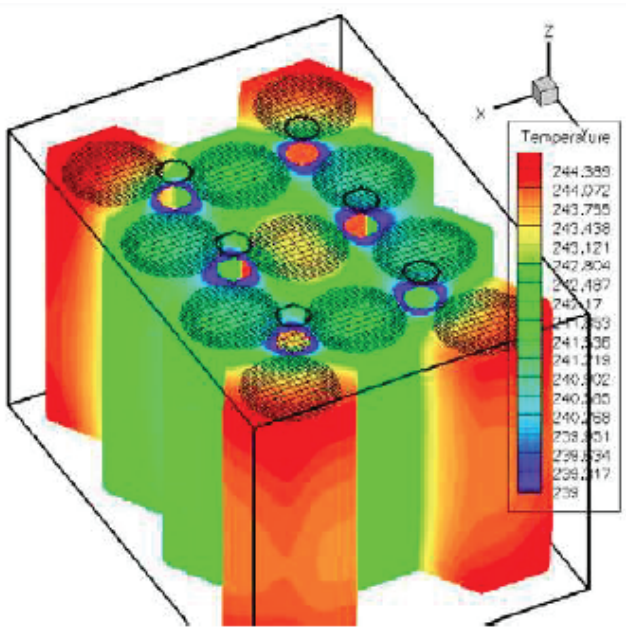
Vision: Enhanced energy, power, chg times, life from existing batts.

Open technical problems for BMS:

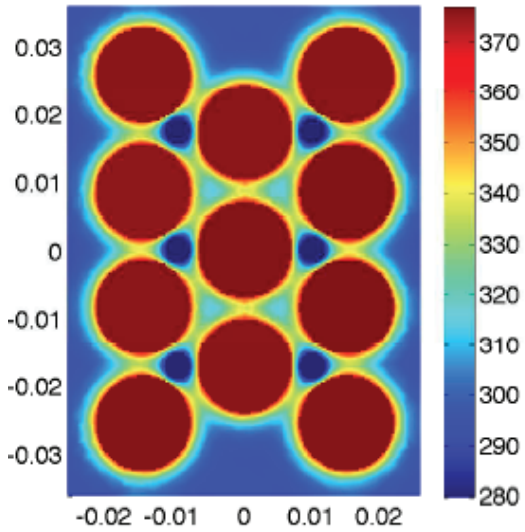
(1) State observability

(2) Output feedback

(3) Thermal management



CFD simulation

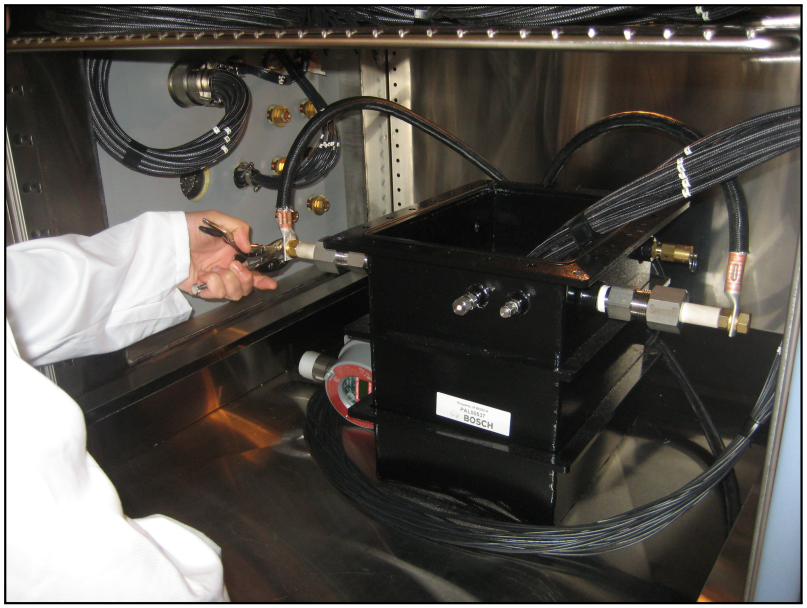


Future: EChem-based Battery Management Systems

Vision: Enhanced energy, power, chg times, life from existing batts.

Open technical problems for BMS:
(1) State observability
(2) Output feedback
(3) Thermal management
(4) Experimental testing





Future: EChem-based Battery Management Systems

Vision: Enhanced energy, power, chg times, life from existing batts.

Open technical problems for BMS:
(1) State observability
(2) Output feedback
(3) Thermal management
(4) Experimental testing

Collaborators:

- Michalek, Whitacre, Apt, Litster
- Bosch RTC, Ford Motor Company
- UCSD, University of Michigan

Future: EChem-based Battery Management Systems

Vision: Enhanced energy, power, chg times, life from existing batts.

Open technical problems for BMS:
(1) State observability
(2) Output feedback
(3) Thermal management
(4) Experimental testing

Collaborators:

- Michalek, Whitacre, Apt, Litster
- Bosch RTC, Ford Motor Company
- UCSD, University of Michigan

Funding:

- ARPA-E AMPED
- DoD HESM

Future: Solve EV Mobility - Modular Battery Packs

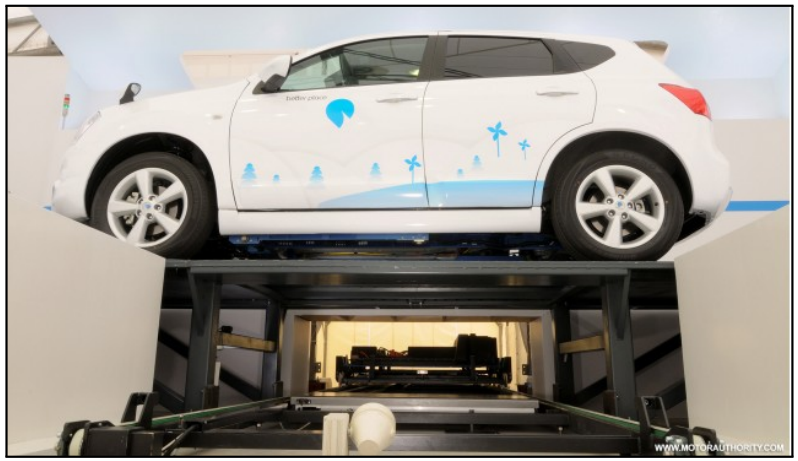
Goal: Solve range anxiety

Future: Solve EV Mobility - Modular Battery Packs

Fast Charging



Battery Swapping



Future: Solve EV Mobility - Modular Battery Packs

Modular User-Replaceable Batts

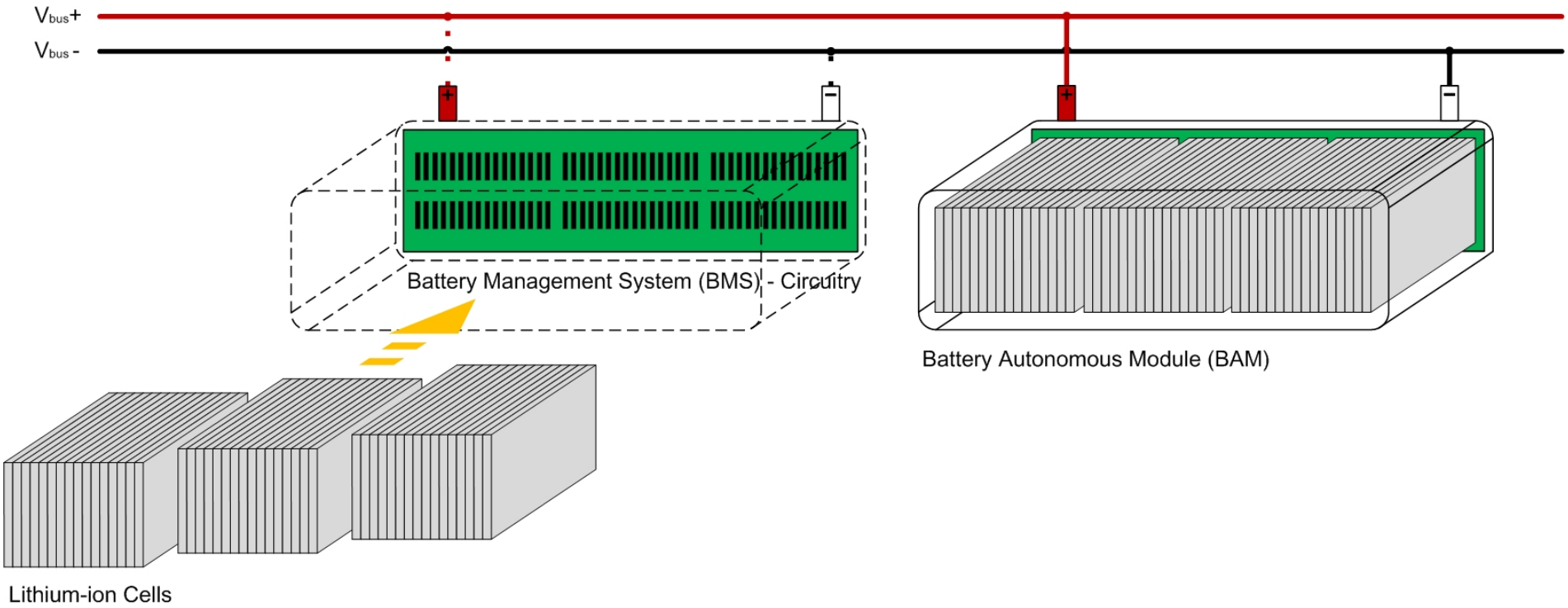


Scalable to EVs?

Future: Solve EV Mobility - Modular Battery Packs

Key components:

(1) Battery Autonomous Architecture (BAM)

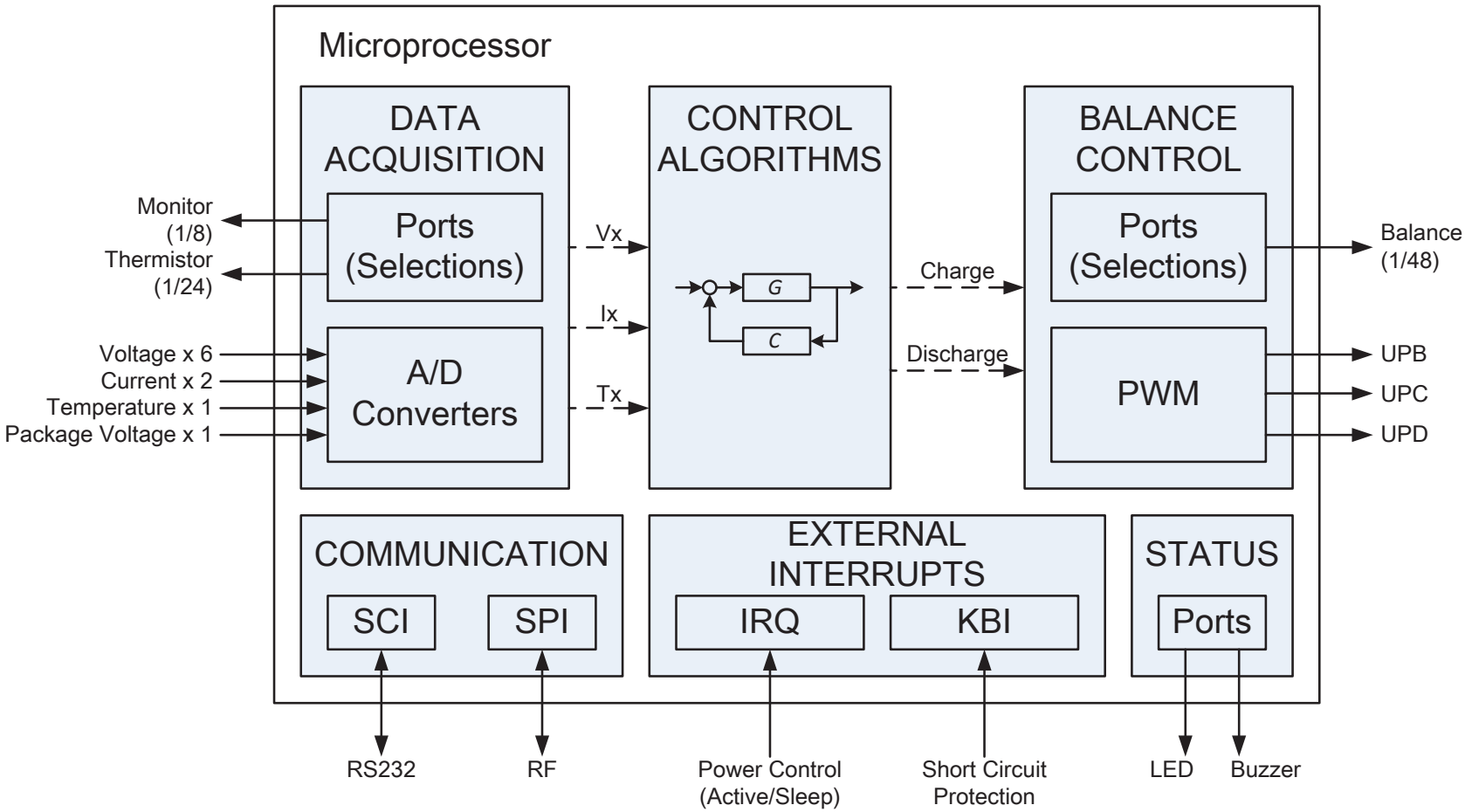


Future: Solve EV Mobility - Modular Battery Packs

Key components:

(1) Battery Autonomous Architecture (BAM)

(2) Battery Management System (BMS)



Future: Solve EV Mobility - Modular Battery Packs

Key components:
(1) Battery Autonomous Architecture (BAM)
(2) Battery Management System (BMS)
(3) Economics $\leftrightarrow$ Design

- Financial model?
- Lease from third-party owner?
- Lower acquisition & operational costs?

Future: Solve EV Mobility - Modular Battery Packs

Key components:
(1) Battery Autonomous Architecture (BAM)
(2) Battery Management System (BMS)
(3) Economics $\leftrightarrow$ Design

Collaborators:

- Michalek, Rubin, Cagan
- Pacific Battery Management Systems, UCSD

Future: Solve EV Mobility - Modular Battery Packs

Key components:
(1) Battery Autonomous Architecture (BAM)
(2) Battery Management System (BMS)
(3) Economics $\leftrightarrow$ Design

Collaborators:

- Michalek, Rubin, Cagan
- Pacific Battery Management Systems, UCSD

Funding:

- ARPA-E RANGE
- Automotive Industry

Future: Demand-side Management

Vision: A fundamental systems science for demand response.
Apps: Buildings & PEVs

Future: Demand-side Management

Vision: A fundamental systems science for demand response.
Apps: Buildings & PEVs

Open technical problems for Boundary Coupled PDEs:

Future: Demand-side Management

Vision: A fundamental systems science for demand response.
Apps: Buildings & PEVs

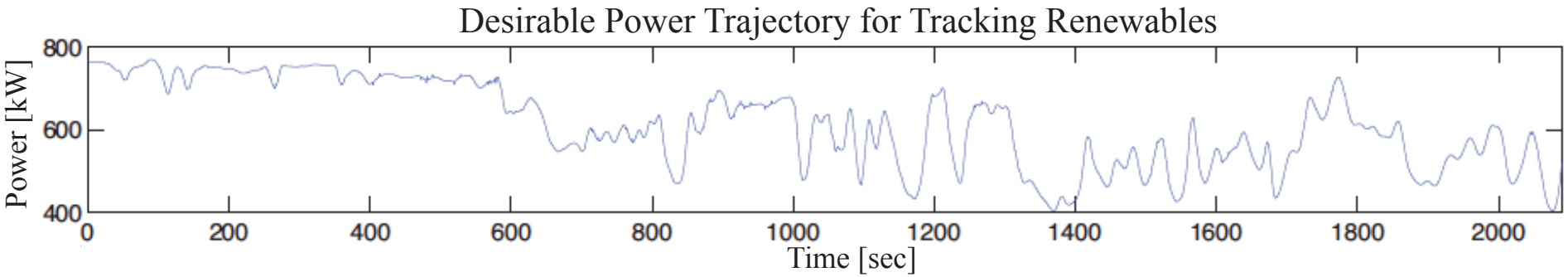
Open technical problems for Boundary Coupled PDEs:
(1) System ID & State Estimation

$$
\begin{aligned}
u_t(x,t) &= \alpha\lambda(x)u_x + \alpha u + \beta u_{xx} \\
v_t(x,t) &= -\alpha\mu(x)v_x + \alpha v + \beta v_{xx} \\
u(1,t) &= q_1 v(1,t), \qquad u_x(0,t) = -v_x(0,t) \\
v(0,t) &= q_2 u(0,t), \qquad v_x(1,t) = -u_x(1,t)
\end{aligned}
$$

Future: Demand-side Management

Vision: A fundamental systems science for demand response.
Apps: Buildings & PEVs

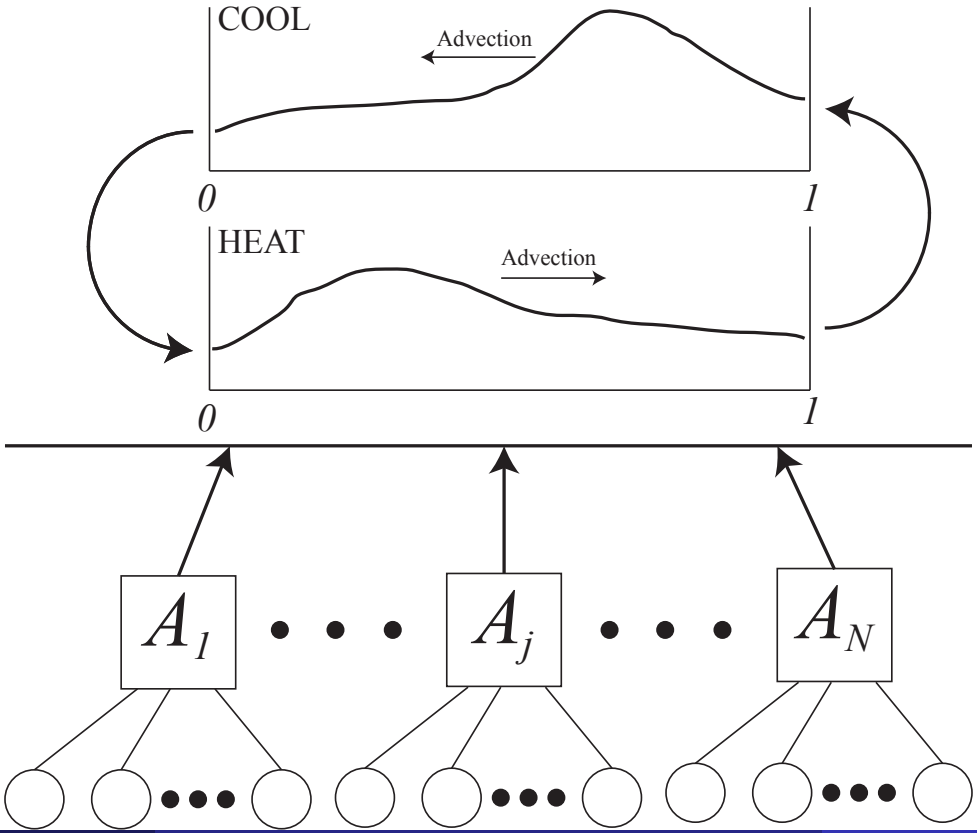
Open technical problems for Boundary Coupled PDEs:
(1) System ID & State Estimation
(2) Reference Tracking Control via Temperature Setpoint Changes



Future: Demand-side Management

Vision: A fundamental systems science for demand response.
Apps: Buildings & PEVs

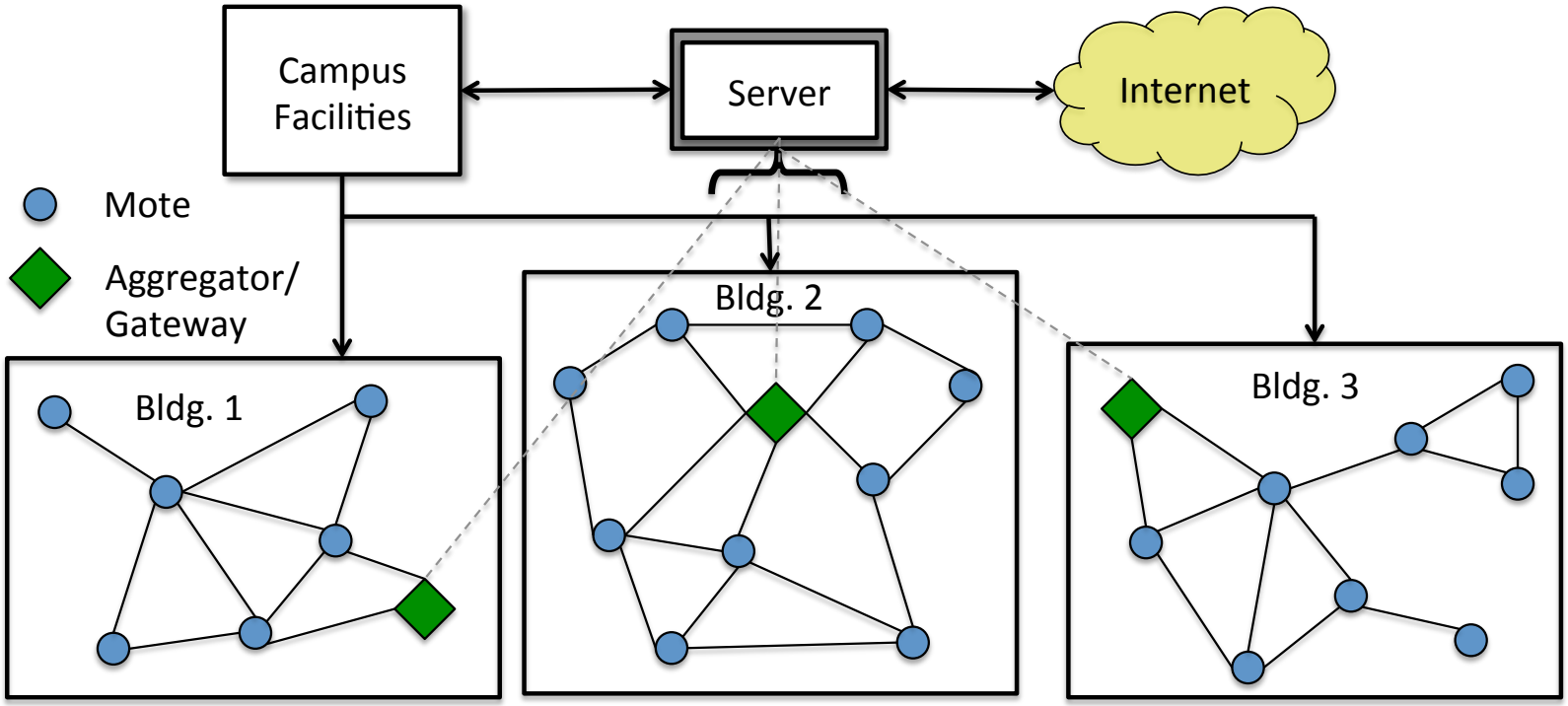
Open technical problems for Boundary Coupled PDEs:
(1) System ID & State Estimation
(2) Reference Tracking Control via Temperature Setpoint Changes
(3) Hierarchical Control Architecture



Future: Demand-side Management

Vision: A fundamental systems science for demand response.
Apps: Buildings & PEVs

Open technical problems for Boundary Coupled PDEs:
(1) System ID & State Estimation
(2) Reference Tracking Control via Temperature Setpoint Changes
(3) Hierarchical Control Architecture
(4) Campus Testbed



Future: Demand-side Management

Vision: A fundamental systems science for demand response.
Apps: Buildings & PEVs

Open technical problems for Boundary Coupled PDEs:
(1) System ID & State Estimation
(2) Reference Tracking Control via Temperature Setpoint Changes
(3) Hierarchical Control Architecture
(4) Campus Testbed

Collaborators:

- Ilić, Hug-Glazmann
- Nest Labs, Palo Alto
- Aalborg University, Denmark

Future: Demand-side Management

Vision: A fundamental systems science for demand response.
Apps: Buildings & PEVs

Open technical problems for Boundary Coupled PDEs:
(1) System ID & State Estimation
(2) Reference Tracking Control via Temperature Setpoint Changes
(3) Hierarchical Control Architecture
(4) Campus Testbed

Collaborators:

- Ilić, Hug-Glazmann
- Nest Labs, Palo Alto
- Aalborg University, Denmark

Funding:

- DOE EERE
- NSF EPAS, CPS

Courses I could teach

24-311 Numerical Methods

24-351 Dynamics

24-352 Dynamic Systems & Control

24-422 Special Topics in Energy Systems Modeling

24-451 Feedback Control Systems

24-643 Special Topics in Electrochemical Energy Storage Systems

24-671 Special Topics in Practical Control and Automation

24-701 Mathematical Techniques in Engineering

24-703 Numerical Methods in Engineering

24-771 Linear Systems

24-776 Nonlinear Controls

NEW - Battery Systems and Control

NEW - Control of Distributed Parameter Systems

my lab...

Themes: systems & control | energy storage & smart grids

my lab...

Themes: systems & control | energy storage & smart grids

Key Tools:

- PDE modeling
- Lyapunov stability
- Adaptive control
- Optimization

my lab...

Themes: systems & control | energy storage & smart grids

Key Tools:

- PDE modeling
- Lyapunov stability
- Adaptive control
- Optimization

Balance

Theory/Computational	67%	33%	Experimental

my lab...

Themes: systems & control | energy storage & smart grids

Key Tools:

- PDE modeling
- Lyapunov stability
- Adaptive control
- Optimization

Balance

Theory/Computational	67%	33%	Experimental

Key Collaborations

Academia	Michigan, UCSD, Ecole des Mines, Aalborg Univ.
Industry	Bosch RTC, Nest Labs, Ford Motor Company

my lab...

Themes: systems & control | energy storage & smart grids

Key Tools:

- PDE modeling
- Lyapunov stability
- Adaptive control
- Optimization

Balance

Theory/Computational	67%	33%	Experimental

Key Collaborations

Academia	Michigan, UCSD, Ecole des Mines, Aalborg Univ.
Industry	Bosch RTC, Nest Labs, Ford Motor Company

Potential Affiliations

- Scott Institute for Energy Innovation
- Carnegie Mellon Electricity Industry Center
- Vehicle Electrification Group

Publications available at

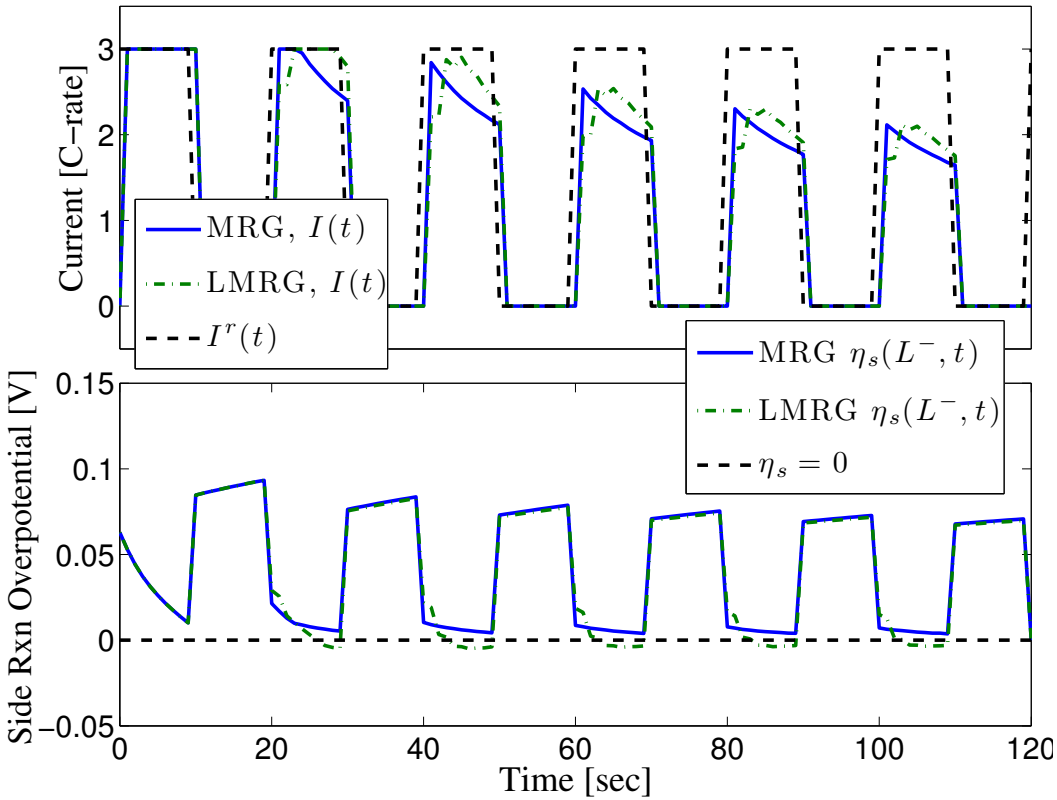
http://flyingv.ucsd.edu/smoura/

smoura@ucsd.edu

Linear Modified Reference Governor

Modified Reference Governor (MRG) : Simulations

Linearized MRG (LMRG) : Explicit function evaluation



PHEV Power Management

Problem Statement

Design a supervisory control algorithm for plug-in hybrid electric vehicles (PHEVs) that splits engine and battery power in some optimal sense.



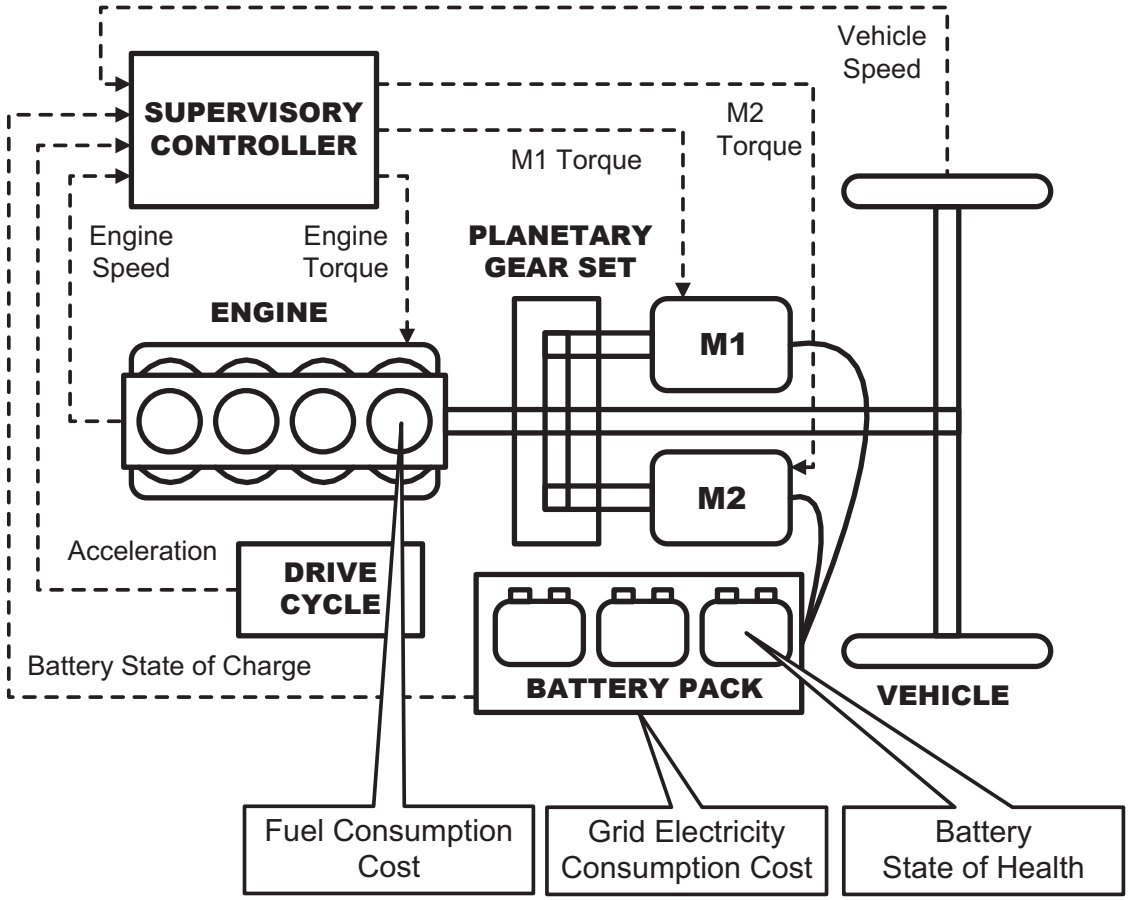
J. Voelcker, "Plugging Away in a Prius," *IEEE Spectrum*, vol. 45, pp. 30-48, 2008.



Power-Split PHEV Model

Ex: Toyota Prius, Ford Escape Hybrid

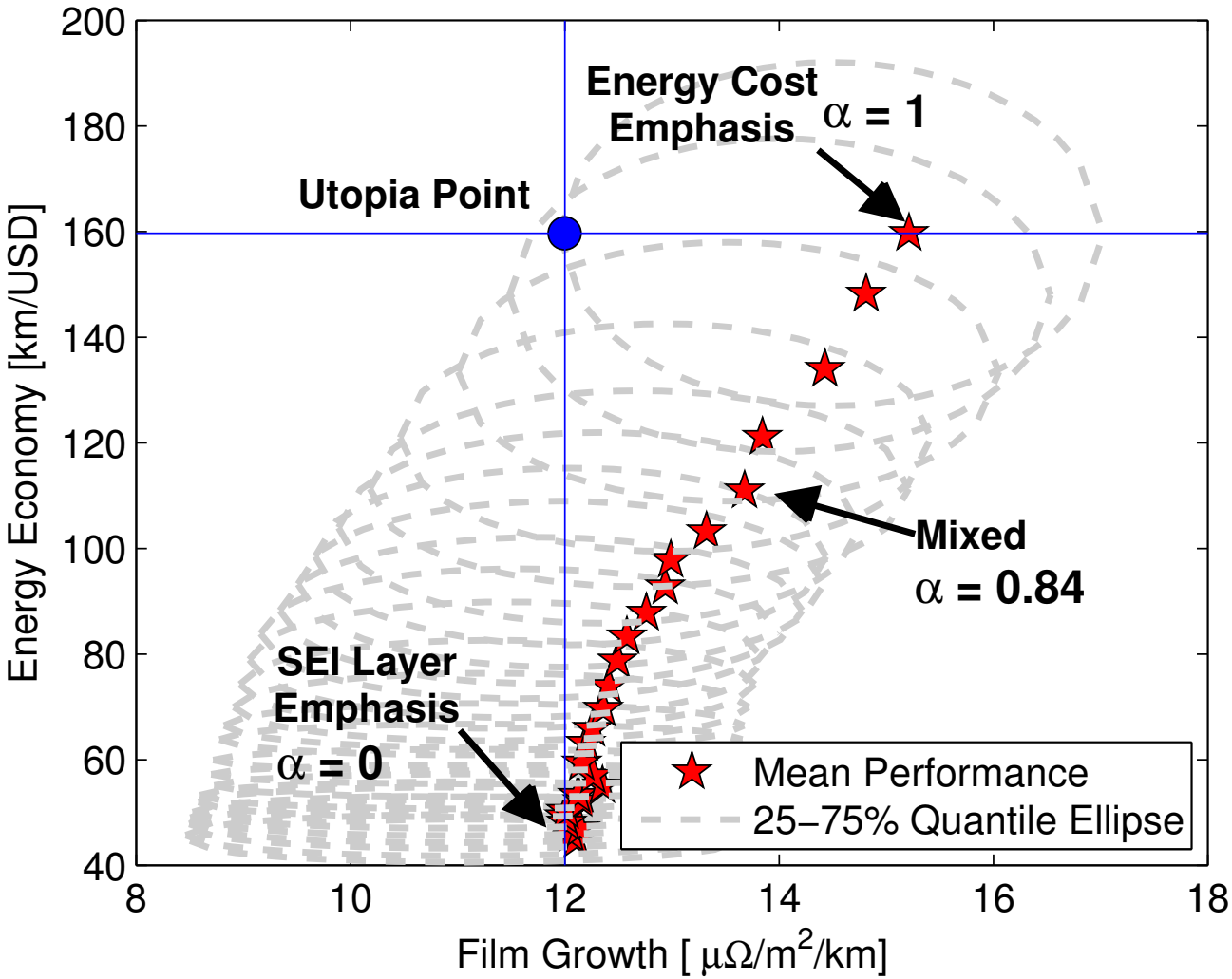
- Control Inputs
  - Engine Torque
  - M1 Torque
- State Variables
  - Engine speed
  - Vehicle speed
  - Battery SOC
  - Vehicle acceleration (Markov Chain)



Control Optimization: Minimize energy consumption cost AND battery aging

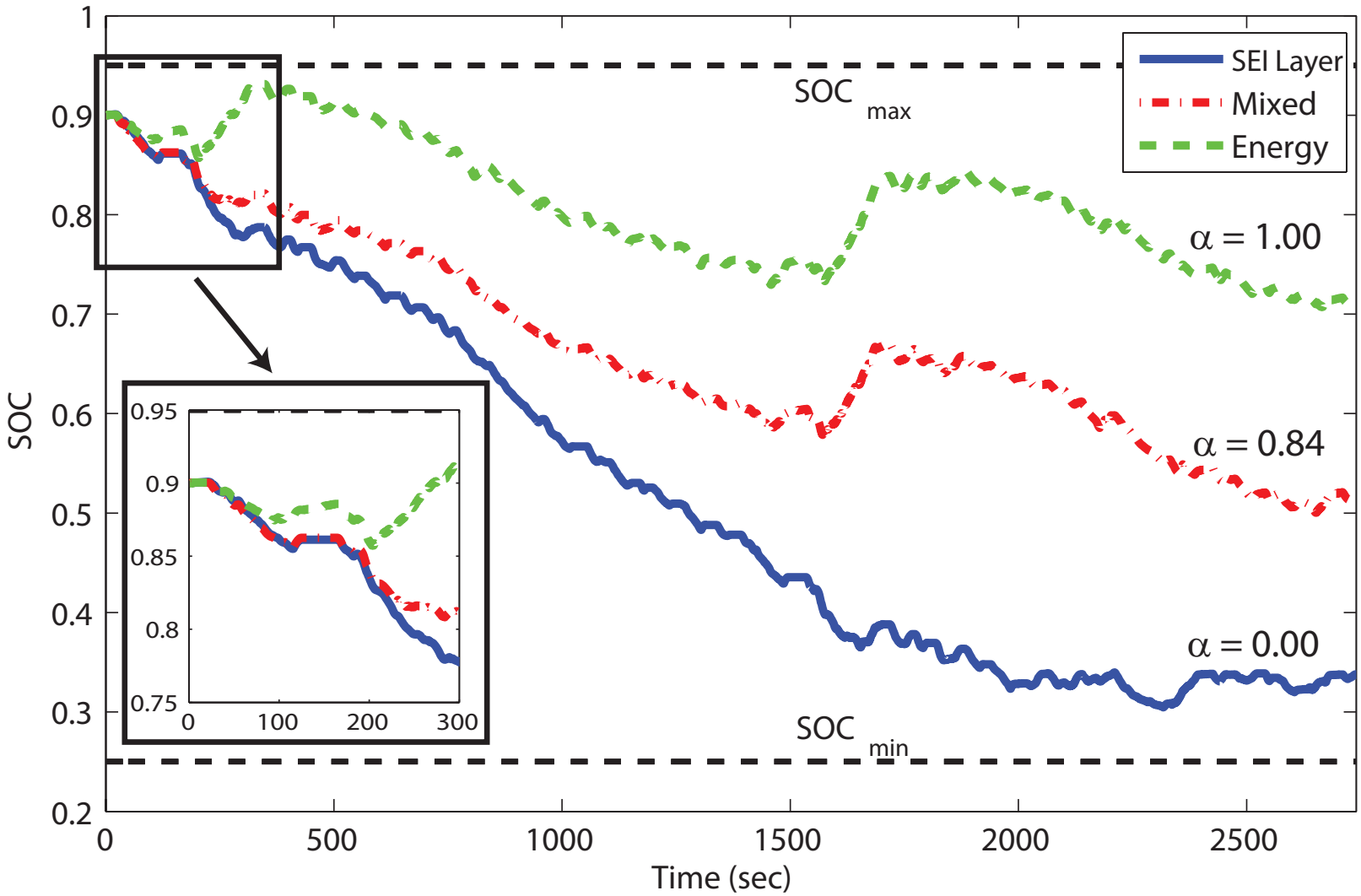
Pareto Set of Optimal Solutions

Anode-side SEI Layer Growth

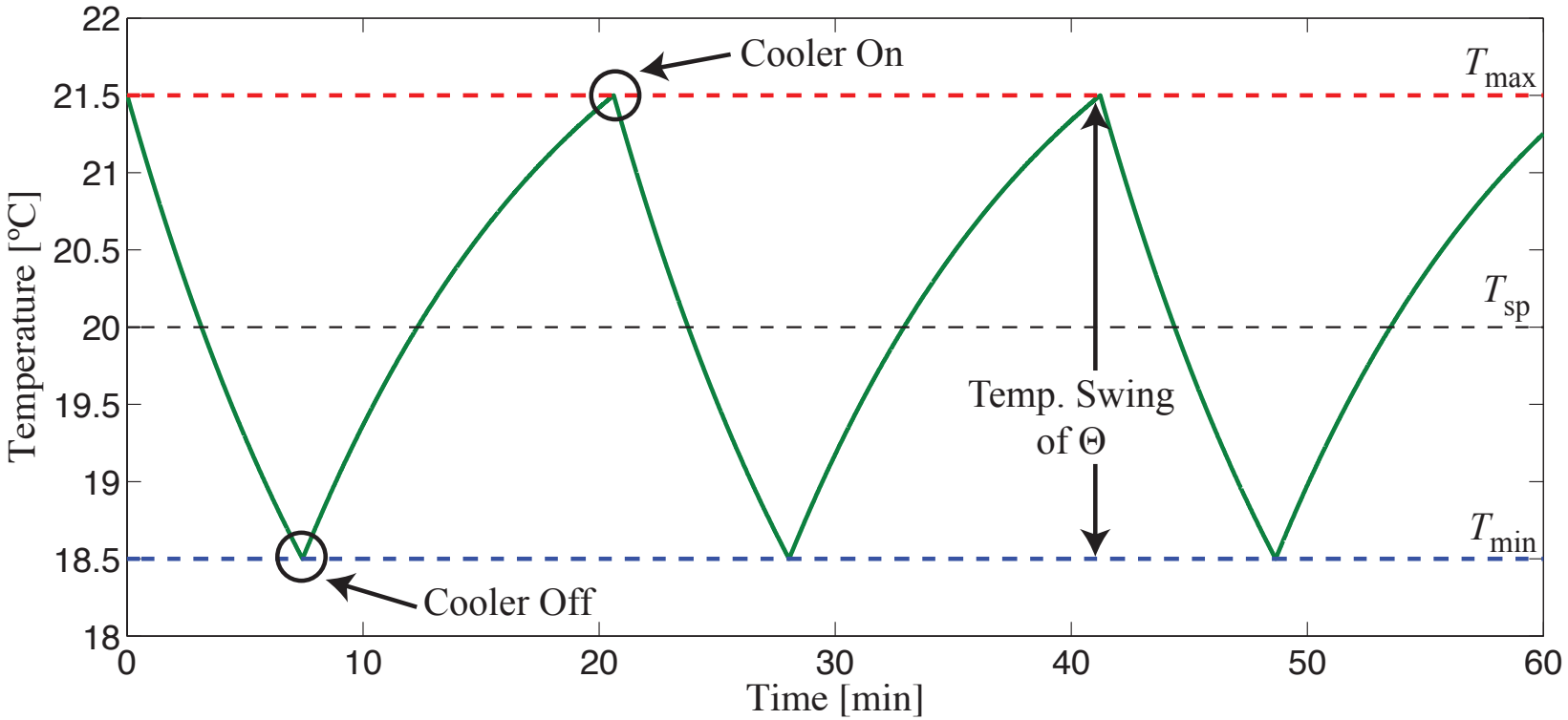


SOC Trajectories

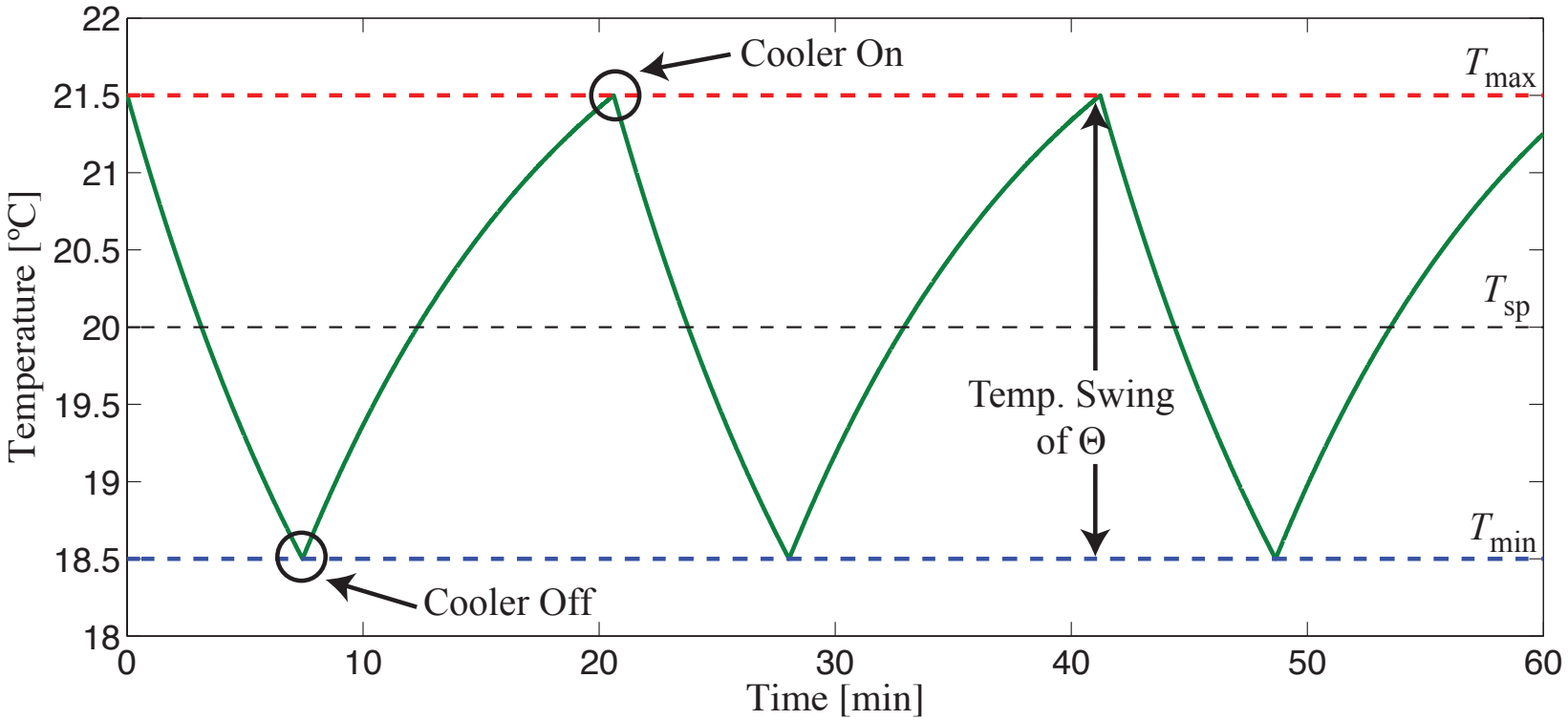
Anode-side SEI Layer Growth | UDDSx2



Modeling TCLs



Modeling TCLs



$$\dot{T}_i(t) = \frac{1}{R_i C_i}\left[T_\infty - T_i(t) - s_i(t) R_i P_i\right], \quad i = 1, 2, \ldots, N$$

$$s_i \in \{0, 1\}$$

Modeling Aggregated TCLs

Main Idea: Convert 1000+ ODEs into two coupled linear PDEs

Modeling Aggregated TCLs

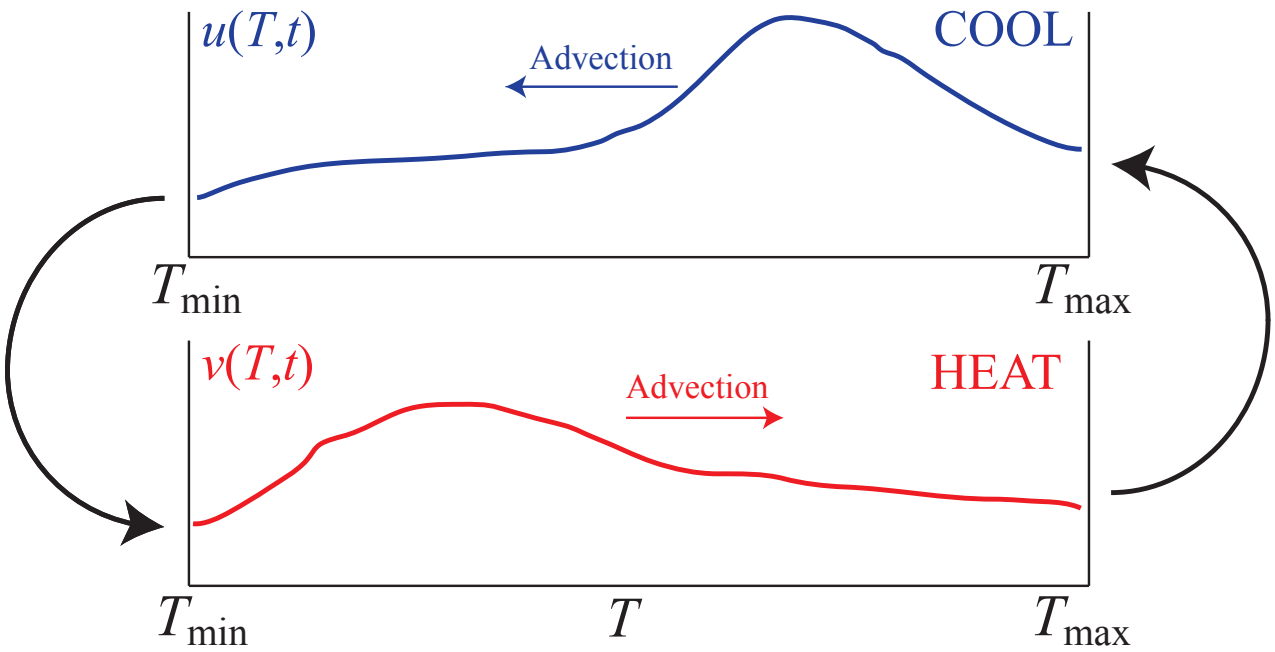
Main Idea: Convert 1000+ ODEs into two coupled linear PDEs

$u(T,t)$	# TCLs / °C, in COOL state, @ temp T, time t
$v(T,t)$	# TCLs / °C, in HEAT state, @ temp T, time t

Modeling Aggregated TCLs

Main Idea: Convert 1000+ ODEs into two coupled linear PDEs

$u(T,t)$	# TCLs / °C, in COOL state, @ temp T, time t
$v(T,t)$	# TCLs / °C, in HEAT state, @ temp T, time t



Modeling Aggregated TCLs

Main Idea: Convert 1000+ ODEs into two coupled linear PDEs

$u(T,t)$	# TCLs / °C, in COOL state, @ temp T, time t
$v(T,t)$	# TCLs / °C, in HEAT state, @ temp T, time t

Flux of TCLs in HEAT state:
#TCLs / sec

$$\psi(T,t) = v(T,t)\frac{dT}{dt}(t) = \frac{1}{RC}\left[T_\infty - T(t)\right]v(T,t)$$

Modeling Aggregated TCLs

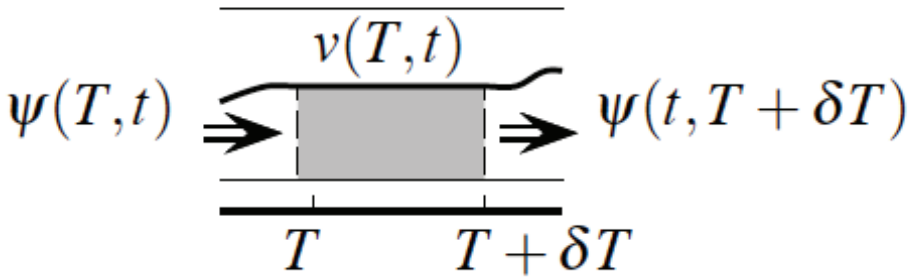
Main Idea: Convert 1000+ ODEs into two coupled linear PDEs

$u(T,t)$	# TCLs / °C, in COOL state, @ temp T, time t
$v(T,t)$	# TCLs / °C, in HEAT state, @ temp T, time t

Flux of TCLs in HEAT state:
#TCLs / sec

$$\psi(T,t) = v(T,t)\frac{dT}{dt}(t) = \frac{1}{RC}\left[T_\infty - T(t)\right] v(T,t)$$

Control volume:



Modeling Aggregated TCLs

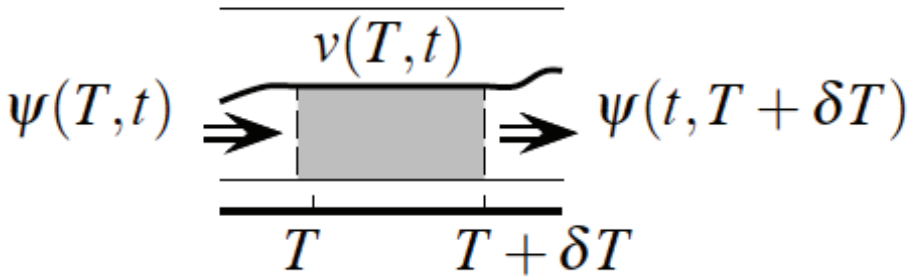
Main Idea: Convert 1000+ ODEs into two coupled linear PDEs

$u(T,t)$	# TCLs / °C, in COOL state, @ temp T, time t
$v(T,t)$	# TCLs / °C, in HEAT state, @ temp T, time t

Flux of TCLs in HEAT state:
#TCLs / sec

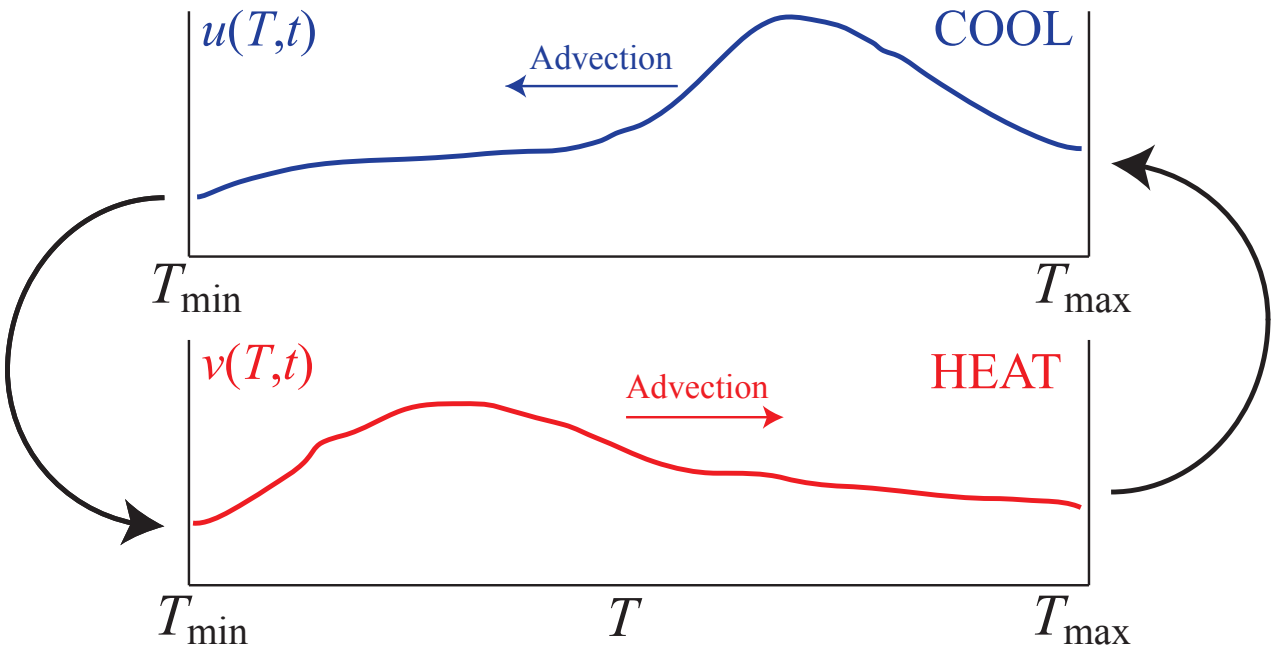
$$\psi(T,t) = v(T,t)\frac{dT}{dt}(t) = \frac{1}{RC}\left[T_\infty - T(t)\right] v(T,t)$$

Control volume:

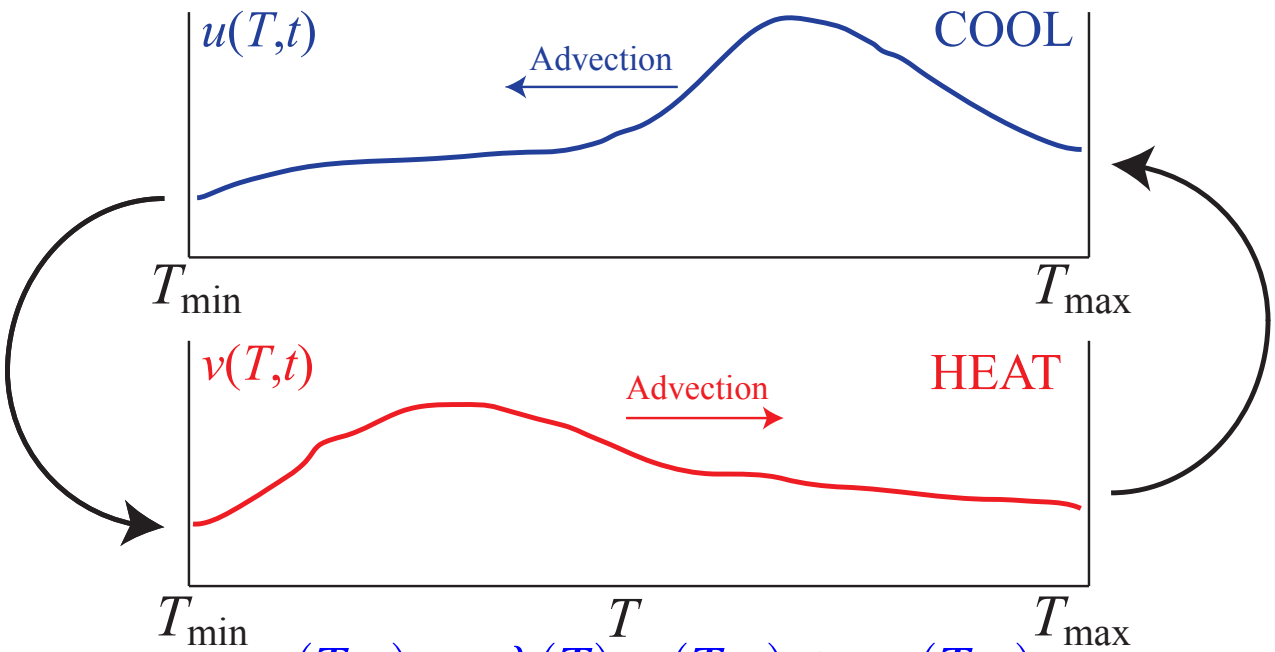


$$\begin{aligned}\frac{\partial v}{\partial t}(T,t) &= \lim_{\delta T \to 0}\left[\frac{\psi(T+\delta T,t) - \psi(T,t)}{\delta T}\right] \\ &= \frac{\partial \psi}{\partial T}(T,t) \\ &= -\frac{1}{RC}\left[T_\infty - T(t)\right]\frac{\partial v}{\partial T}(T,t) + \frac{1}{RC}v(T,t)\end{aligned}$$

PDE Model of Aggregated TCLs



PDE Model of Aggregated TCLs



$$u_t(T,t) = \alpha\lambda(T)u_T(T,t) + \alpha u(T,t)$$

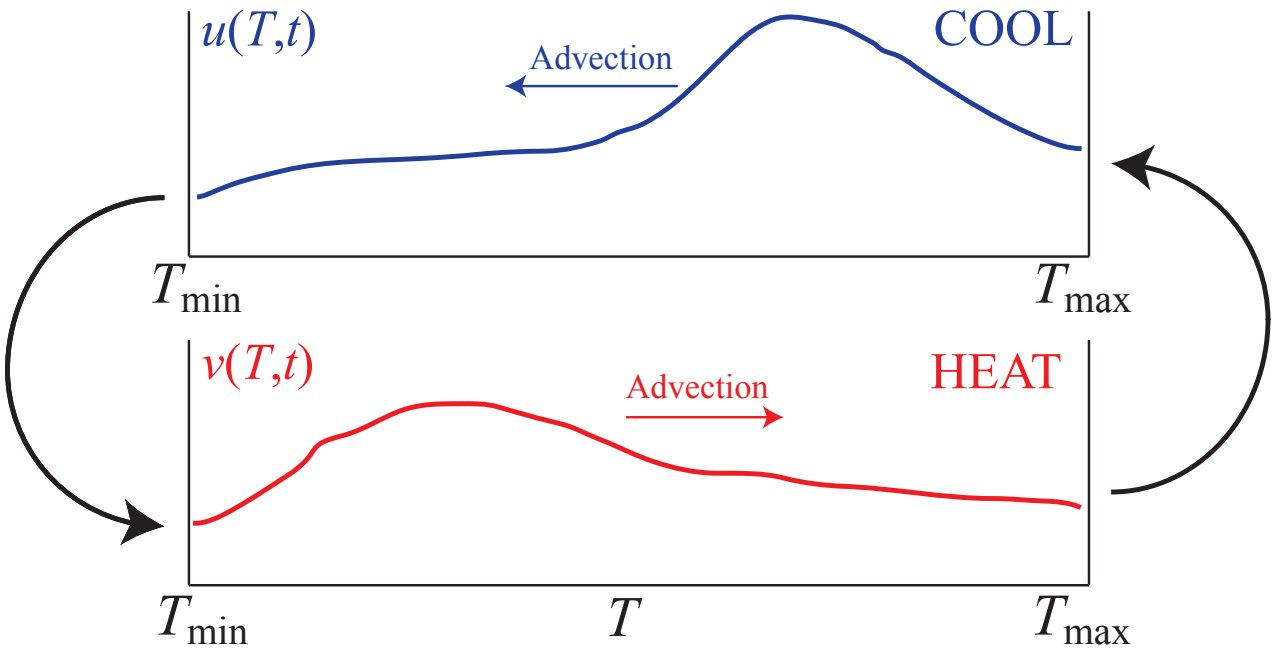
$$v_t(T,t) = -\alpha\mu(T)v_T(T,t) + \alpha v(T,t)$$

$$u(T_{\max},t) = q_1 v(T_{\max},t)$$

$$v(T_{\min},t) = q_2 u(T_{\min},t)$$

Video of 1,000 TCLs

PDE Model of Aggregated TCLs



$$u_t(T,t) = \alpha\lambda(T)u_T(T,t) + \alpha u(T,t)$$

$$v_t(T,t) = -\alpha\mu(T)v_T(T,t) + \alpha v(T,t)$$

$$u(T_{\max},t) = q_1 v(T_{\max},t)$$

$$v(T_{\min},t) = q_2 u(T_{\min},t)$$

Original Idea: Malhame and Chong, Trans. on Automatic Control (1985)
Remark: Assumes homogeneous populations

Modeling Heterogeneous Aggregated TCLs

Reality: TCL populations are heterogeneous
e.g. variable heat capacity, power, deadband sizes

Video of 1,000 heterogeneous TCLs

Modeling Heterogeneous Aggregated TCLs

Reality: TCL populations are heterogeneous
e.g. variable heat capacity, power, deadband sizes

$$
\begin{aligned}
u_t(T,t) &= \alpha\lambda(T)u_T(T,t) + \alpha u(T,t) + \beta u_{TT}(T,t) \\
v_t(T,t) &= -\alpha\mu(T)v_T(T,t) + \alpha v(T,t) + \beta v_{TT}(T,t) \\
u(T_{\max},t) &= q_1 v(T_{\max},t), \qquad u_T(T_{\min},t) = -v_T(T_{\min},t) \\
v(T_{\min},t) &= q_2 u(T_{\min},t), \qquad v_T(T_{\max},t) = -u_T(T_{\max},t)
\end{aligned}
$$

Modeling Heterogeneous Aggregated TCLs

Reality: TCL populations are heterogeneous
e.g. variable heat capacity, power, deadband sizes

$$
\begin{aligned}
u_t(T,t) &= \alpha\lambda(T)u_T(T,t) + \alpha u(T,t) + \beta u_{TT}(T,t) \\
v_t(T,t) &= -\alpha\mu(T)v_T(T,t) + \alpha v(T,t) + \beta v_{TT}(T,t) \\
u(T_{\max},t) &= q_1 v(T_{\max},t), \qquad u_T(T_{\min},t) = -v_T(T_{\min},t) \\
v(T_{\min},t) &= q_2 u(T_{\min},t), \qquad v_T(T_{\max},t) = -u_T(T_{\max},t)
\end{aligned}
$$

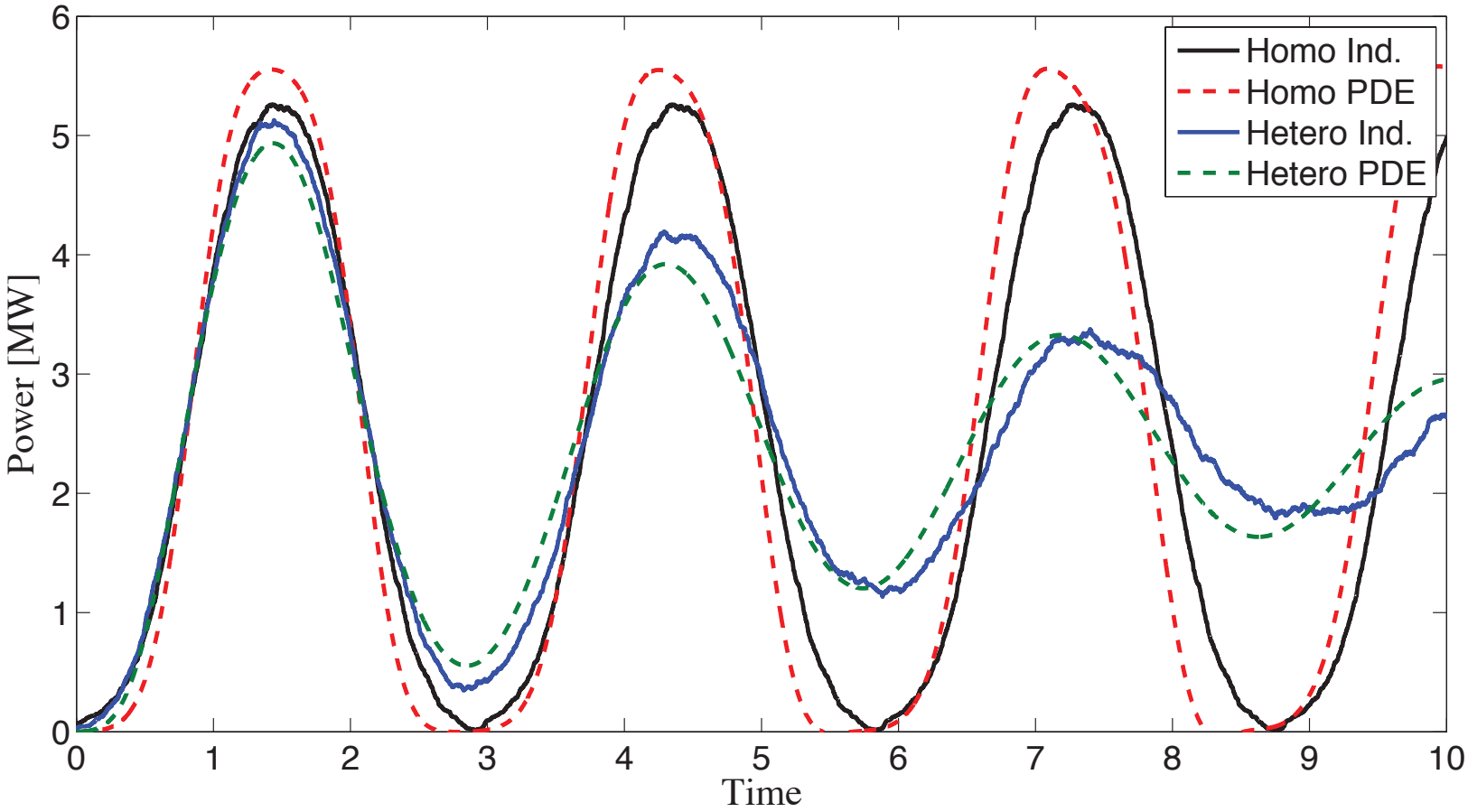
Proposition: The total number of TCLs is conserved over time.

$$
Q(t) = \int_{T_{\min}}^{T_{\max}} u(T,t)dT + \int_{T_{\min}}^{T_{\max}} v(T,t)dT
$$

$$
\frac{dQ}{dt}(t) = 0, \qquad \forall t
$$

Video Evolution of Heterogeneous PDE

Model Comparison



Outline

- Estimation - looking inside w/ Models, Meas., and Math

The State Estimation Problem

Question: Possible to monitor TCLs with minimal sensing infrastructure?

The State Estimation Problem

Question: Possible to monitor TCLs with minimal sensing infrastructure?

Answer: YES! Using HVAC on/off signals only and state estimation

The State Estimation Problem

Question: Possible to monitor TCLs with minimal sensing infrastructure?

Answer: YES! Using HVAC on/off signals only and state estimation

Problem Statement

Estimate states $u(T,t), v(T,t)$ from measurements of HVAC on/off signals

The State Estimation Problem

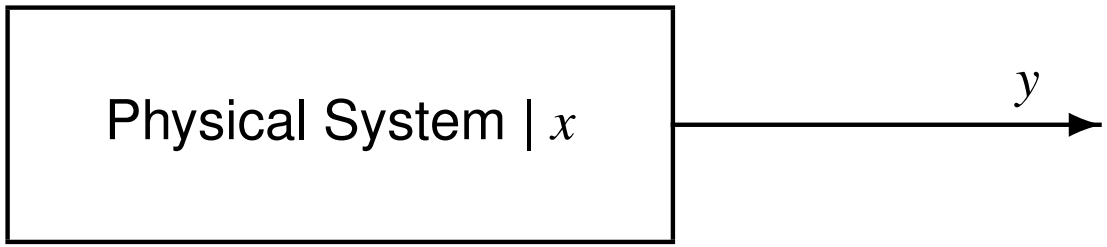
Question: Possible to monitor TCLs with minimal sensing infrastructure?

Answer: YES! Using HVAC on/off signals only and state estimation

Problem Statement

Estimate states $u(T,t), v(T,t)$ from measurements of HVAC on/off signals

Intro to Estimation



The State Estimation Problem

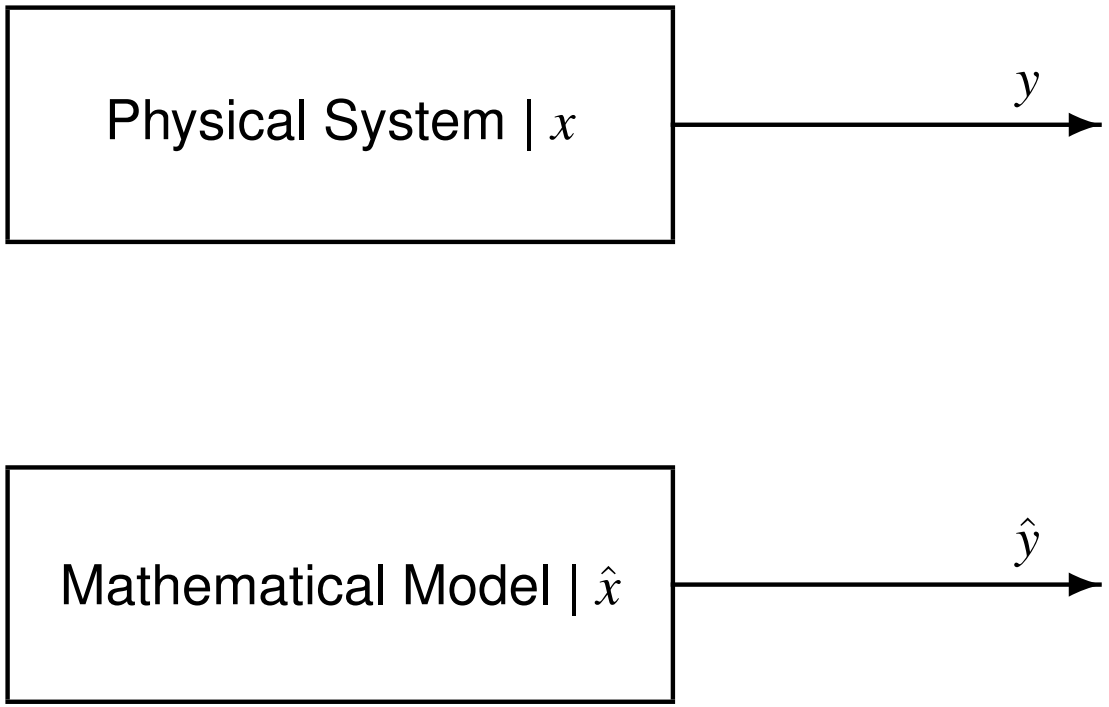
Question: Possible to monitor TCLs with minimal sensing infrastructure?

Answer: YES! Using HVAC on/off signals only and state estimation

Problem Statement

Estimate states $u(T,t), v(T,t)$ from measurements of HVAC on/off signals

Intro to Estimation



The State Estimation Problem

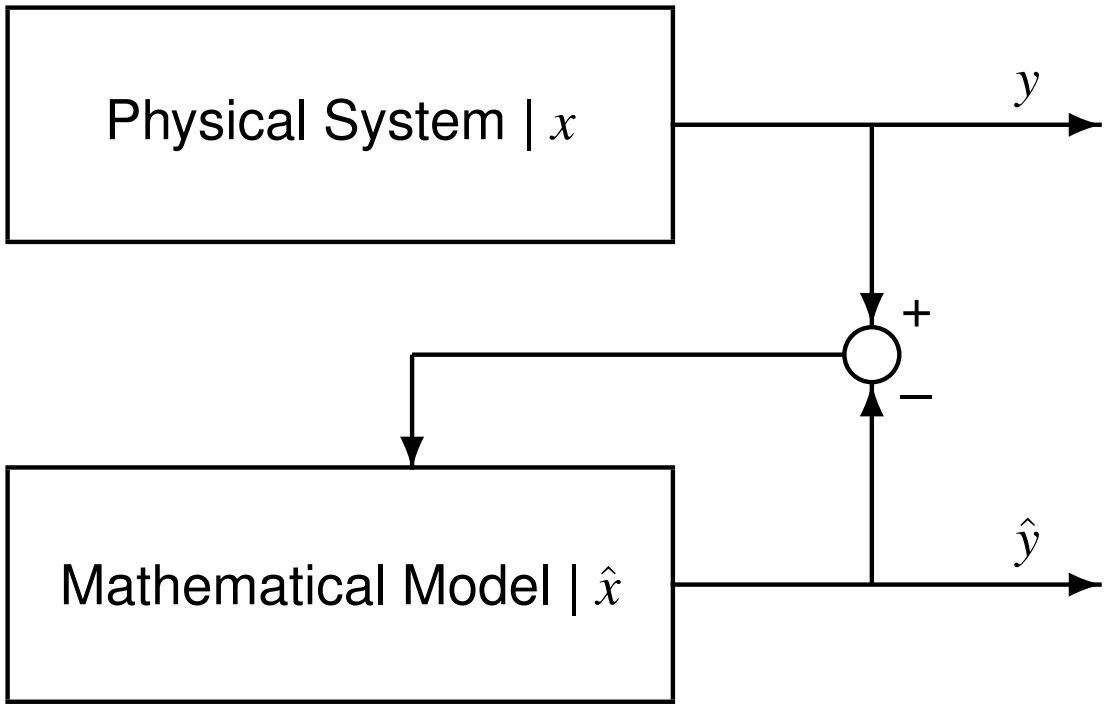
Question: Possible to monitor TCLs with minimal sensing infrastructure?

Answer: YES! Using HVAC on/off signals only and state estimation

Problem Statement

Estimate states $u(T,t), v(T,t)$ from measurements of HVAC on/off signals

Intro to Estimation



The State Estimation Problem

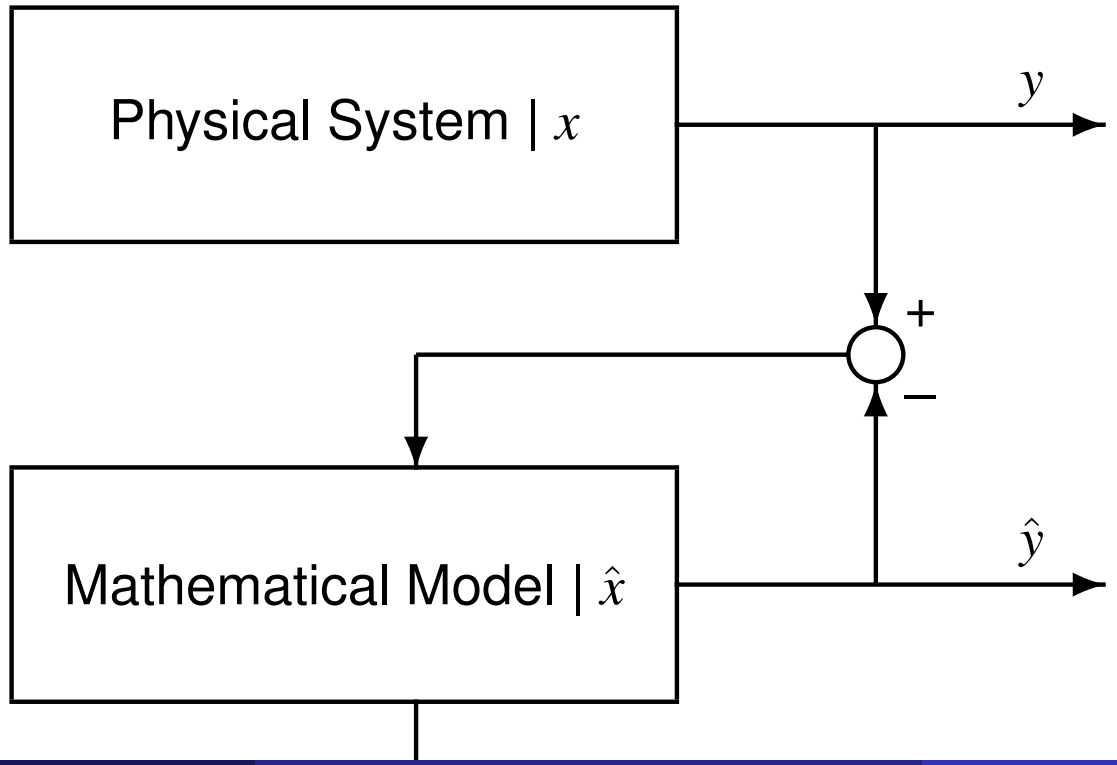
Question: Possible to monitor TCLs with minimal sensing infrastructure?

Answer: YES! Using HVAC on/off signals only and state estimation

Problem Statement

Estimate states $u(T,t), v(T,t)$ from measurements of HVAC on/off signals

Intro to Estimation



PDE State Estimator

Heterogeneous PDE Model: (u, v)

$$
\begin{aligned}
u_t(x,t) &= \alpha\lambda(x)u_x + \alpha u + \beta u_{xx} \\
v_t(x,t) &= -\alpha\mu(x)v_x + \alpha v + \beta v_{xx} \\
u(1,t) &= q_1 v(1,t), \qquad & u_x(0,t) &= -v_x(0,t) \\
v(0,t) &= q_2 u(0,t), \qquad & v_x(1,t) &= -u_x(1,t)
\end{aligned}
$$

PDE State Estimator

Estimator: $(\hat{u}, \hat{v})$

$$\hat{u}_t(x,t) = \alpha\lambda(x)\hat{u}_x + \alpha\hat{u} + \beta\hat{u}_{xx}$$
$$\hat{v}_t(x,t) = -\alpha\mu(x)\hat{v}_x + \alpha\hat{v} + \beta\hat{v}_{xx}$$
$$\hat{u}(1,t) = q_1 v(1,t), \qquad \hat{u}_x(0,t) = -\hat{v}_x(0,t) + p_{10}\left[u(0,t) - \hat{u}(0,t)\right]$$
$$\hat{v}(0,t) = q_2 u(0,t), \qquad \hat{v}_x(1,t) = -\hat{u}_x(1,t) + p_{20}\left[v(1,t) - \hat{v}(1,t)\right]$$

PDE State Estimator

Estimator: $(\hat{u}, \hat{v})$

$$\hat{u}_t(x,t) = \alpha\lambda(x)\hat{u}_x + \alpha\hat{u} + \beta\hat{u}_{xx}$$
$$\hat{v}_t(x,t) = -\alpha\mu(x)\hat{v}_x + \alpha\hat{v} + \beta\hat{v}_{xx}$$
$$\hat{u}(1,t) = q_1 v(1,t), \qquad \hat{u}_x(0,t) = -\hat{v}_x(0,t) + p_{10}\left[u(0,t) - \hat{u}(0,t)\right]$$
$$\hat{v}(0,t) = q_2 u(0,t), \qquad \hat{v}_x(1,t) = -\hat{u}_x(1,t) + p_{20}\left[v(1,t) - \hat{v}(1,t)\right]$$

Estimation Error Dynamics: $(\tilde{u}, \tilde{v}) = (u - \hat{u}, v - \hat{v})$

$$\tilde{u}_t(x,t) = \alpha\lambda(x)\tilde{u}_x + \alpha\tilde{u} + \beta\tilde{u}_{xx}$$
$$\tilde{v}_t(x,t) = -\alpha\mu(x)\tilde{v}_x + \alpha\tilde{v} + \beta\tilde{v}_{xx}$$
$$\tilde{u}(1,t) = 0, \qquad \tilde{u}_x(0,t) = -\tilde{v}_x(0,t) - p_{10}\tilde{u}(0,t)$$
$$\tilde{v}(0,t) = 0, \qquad \tilde{v}_x(1,t) = -\tilde{u}_x(1,t) - p_{20}\tilde{v}(1,t)$$

Goal: Pick $p_{10}, p_{20} \in \mathbb{R}$ such that $(\tilde{u}, \tilde{v}) = (0,0)$ is exponentially stable in $\mathcal{L}_2$-norm

Lyapunov Stability Analysis

Consider the $\mathcal{L}_2$-norm as a candidate Lyapunov functional

$$V(t) = \frac{1}{2}\int_0^1 \tilde{u}(x,t)^2 dx + \frac{1}{2}\int_0^1 \tilde{v}(x,t)^2 dx$$

Lyapunov Stability Analysis

Consider the $\mathcal{L}_2$-norm as a candidate Lyapunov functional

$$V(t) = \frac{1}{2}\int_0^1 \tilde{u}(x,t)^2 dx + \frac{1}{2}\int_0^1 \tilde{v}(x,t)^2 dx$$

The time derivative along the solution trajectories

$$\begin{aligned}\frac{dV}{dt}(t) \leq &\left[-\frac{\alpha}{2}\lambda' - \frac{\beta}{4} + \alpha\right]\int_0^1 \tilde{u}^2 dx + \left[\frac{\alpha}{2}\mu' - \frac{\beta}{4} + \alpha\right]\int_0^1 \tilde{v}^2 dx \\ &+ \left[\beta p_{10} - \frac{\alpha}{2}\lambda(0)\right]\tilde{u}^2(0) + \left[-\beta p_{20} + \frac{\alpha}{2}\mu(1)\right]\tilde{v}^2(1)\end{aligned}$$

Lyapunov Stability Analysis

Consider the $\mathcal{L}_2$-norm as a candidate Lyapunov functional

$$V(t) = \frac{1}{2}\int_0^1 \tilde{u}(x,t)^2 dx + \frac{1}{2}\int_0^1 \tilde{v}(x,t)^2 dx$$

The time derivative along the solution trajectories

$$\begin{aligned}\frac{dV}{dt}(t) \leq &\left[-\frac{\alpha}{2}\lambda' - \frac{\beta}{4} + \alpha\right]\int_0^1 \tilde{u}^2 dx + \left[\frac{\alpha}{2}\mu' - \frac{\beta}{4} + \alpha\right]\int_0^1 \tilde{v}^2 dx \\ &+ \left[\beta p_{10} - \frac{\alpha}{2}\lambda(0)\right]\tilde{u}^2(0) + \left[-\beta p_{20} + \frac{\alpha}{2}\mu(1)\right]\tilde{v}^2(1)\end{aligned}$$

Then the evolution of the $\mathcal{L}_2$-norm is bounded as

$$\begin{aligned}\|\tilde{u}(x,t)\|_{\mathcal{L}_2} &\leq \|\tilde{u}(x,0)\|_{\mathcal{L}_2} e^{\left[-\frac{\alpha}{2}\lambda' - \frac{\beta}{4} + \alpha\right]t}, \\ \|\tilde{v}(x,t)\|_{\mathcal{L}_2} &\leq \|\tilde{v}(x,0)\|_{\mathcal{L}_2} e^{\left[\frac{\alpha}{2}\mu' - \frac{\beta}{4} + \alpha\right]t},\end{aligned}$$

Video Evolution of PDE estimator

Key point: Converges to true distribution, using only HVAC on/off signals.