# Estimation and Control of Battery Electrochemistry Models: A Tutorial

Scott Moura

Assistant Professor | eCAL Director
Civil & Environmental Engineering
University of California, Berkeley

54th IEEE Conference on Decision and Control | Osaka, Japan

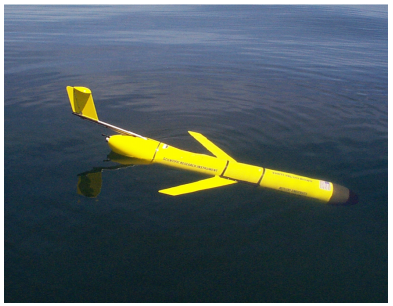





# A Golden Era


IS-1
ST. JUDE MEDICAL
Sylmar, CA USA
ACCENT SR RF
PM1210 SSIR
IS-1
ST. JUDE MEDICAL
Sylmar, CA USA
ANTHEM RF
PM3212 DDDRV





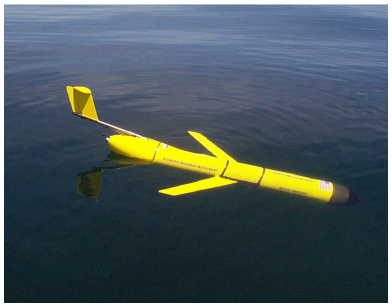




# A Golden Era

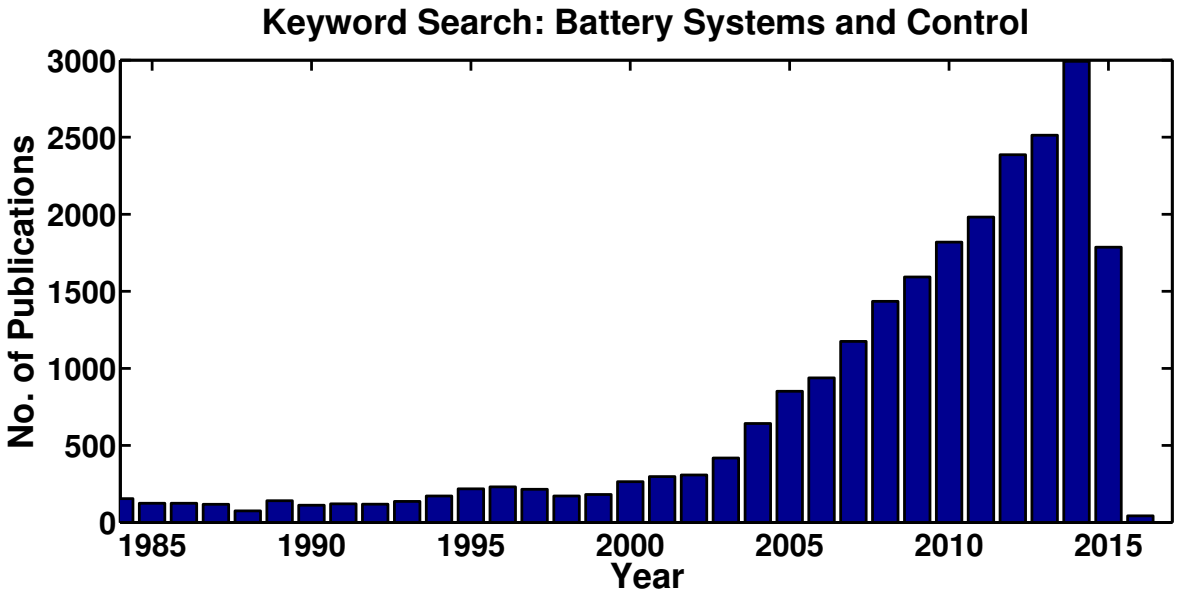

ST. JUDE MEDICAL
Sylmar, CA USA
ACCENT SR RF
PM1210 SSR
ST. JUDE MEDICAL
Sylmar, CA USA
ANTHEM RF
PM3212 DDDRV










Keyword Search: Battery Systems and Control
No. of Publications
3000
2500
2000
1500
1000
500
0
1985
1990
1995
2000
2005
2010
2015
Year

# The Battery Problem

**Needs:** Cheap, high energy/power, fast charge, long life

# The Battery Problem

**Needs:** Cheap, high energy/power, fast charge, long life

**Reality:** Expensive, conservatively design/operated, die too quickly

# The Battery Problem

**Needs:** Cheap, high energy/power, fast charge, long life

**Reality:** Expensive, conservatively design/operated, die too quickly

## Some Motivating Facts

| | |
|---|---|
| EV Batts | 1000 USD / kWh (2010)* |
| | 485 USD / kWh (2012)* |
| | 350 USD / kWh (2015)** |
| | 125 USD / kWh for parity to IC engine |
| | |
| | Only 50-80% of available capacity is used |
| | Range anxiety inhibits adoption |
| | Lifetime risks caused by fast charging |

# The Battery Problem

**Needs:** Cheap, high energy/power, fast charge, long life

**Reality:** Expensive, conservatively design/operated, die too quickly



# The Battery Problem

**Needs:** Cheap, high energy/power, fast charge, long life

**Reality:** Expensive, conservatively design/operated, die too quickly

## Some Motivating Facts

| | |
|---|---|
| EV Batts | 1000 USD / kWh (2010)* |
| | 485 USD / kWh (2012)* |
| | 350 USD / kWh (2015)** |
| | 125 USD / kWh for parity to IC engine |
| | Only 50-80% of available capacity is used |
| | Range anxiety inhibits adoption |
| | Lifetime risks caused by fast charging |

## Two Solutions

| | |
|---|---|
| Design better batteries (materials science & chemistry) | Make current batteries better (estimation and control) |

*Source: MIT Technology Review, “The Electric Car is Here to Stay.” (2013)

**Source: Tesla Powerwall. (2015)

# Outline


1. BACKGROUND & BATTERY ELECTROCHEMISTRY FUNDAMENTALS
2. ESTIMATION AND CONTROL PROBLEM STATEMENTS
3. ELECTROCHEMICAL MODEL
4. STATE & PARAMETER ESTIMATION
5. CONSTRAINED OPTIMAL CONTROL
6. SUMMARY AND OPPORTUNITIES

# History

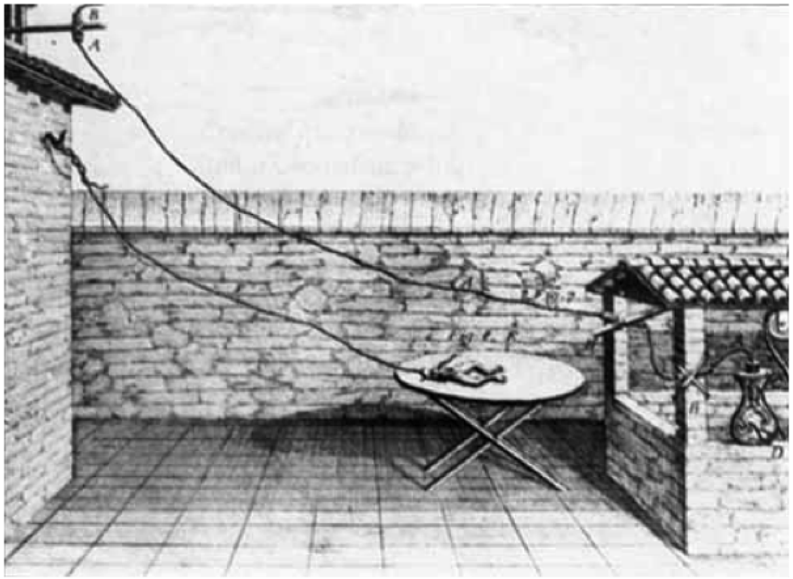
Luigi Galvani, 1737-1798,
Physicist, Bologna, Italy



"Animal electricity"
Dubbed "galvanism"

First foray into
electrophysiology

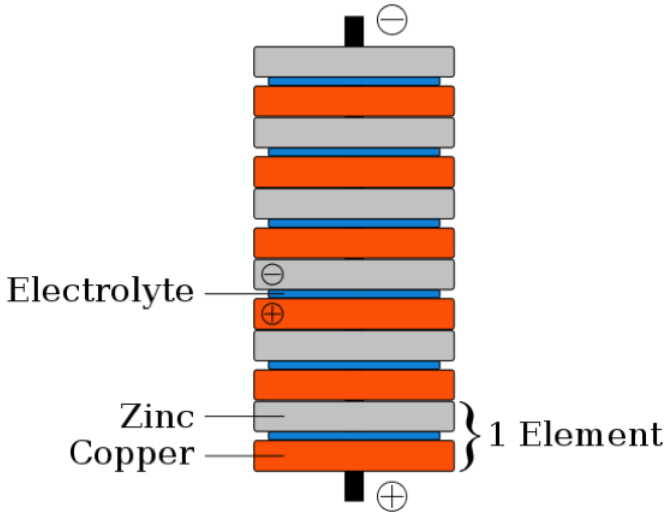
Experiments on frog legs



Alessandro Volta, 1745-1827
Physicist, Como, Italy



Voltaic Pile




Monument to Volta in Como



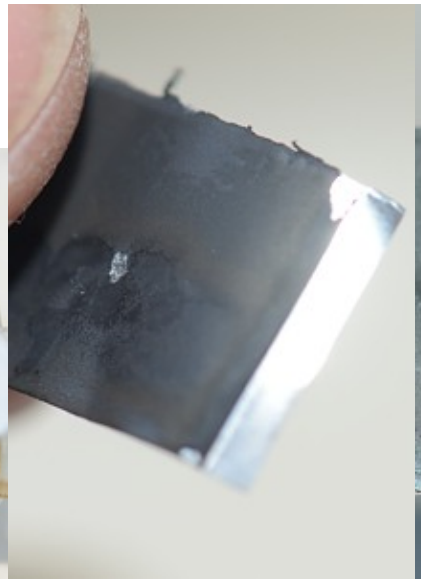
# Cell Assembly - Jelly Roll

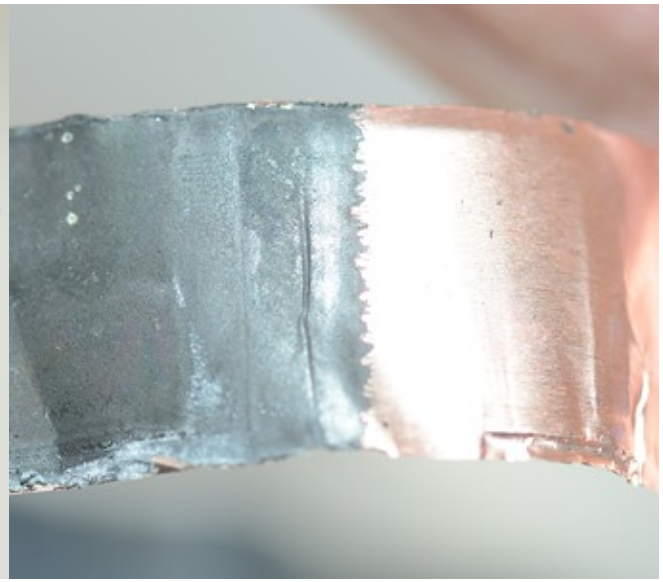




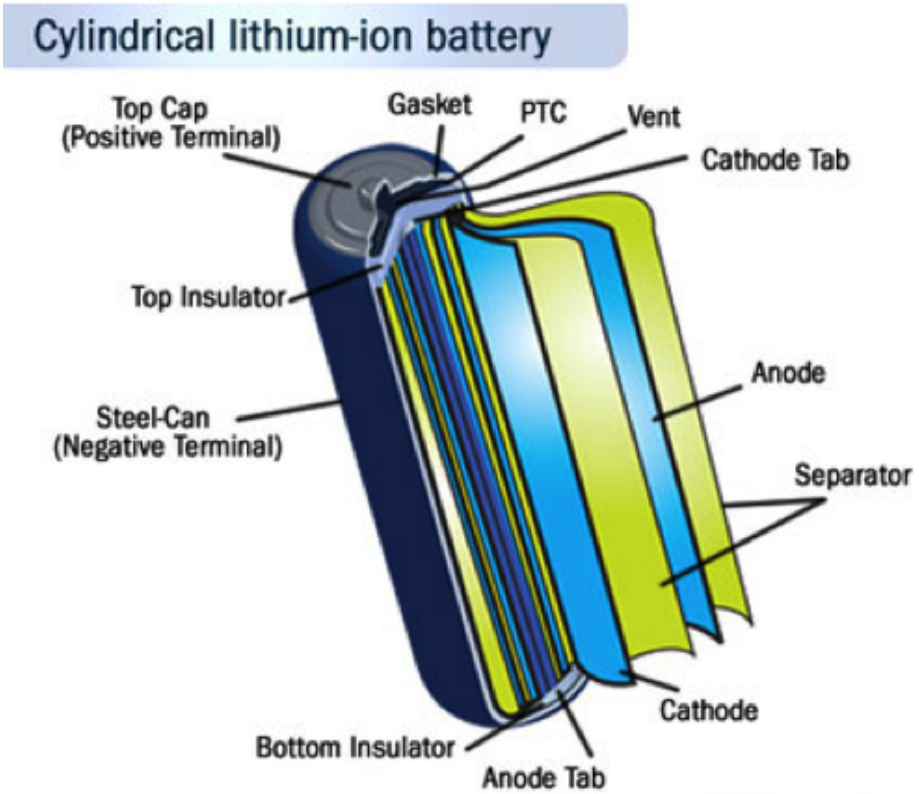






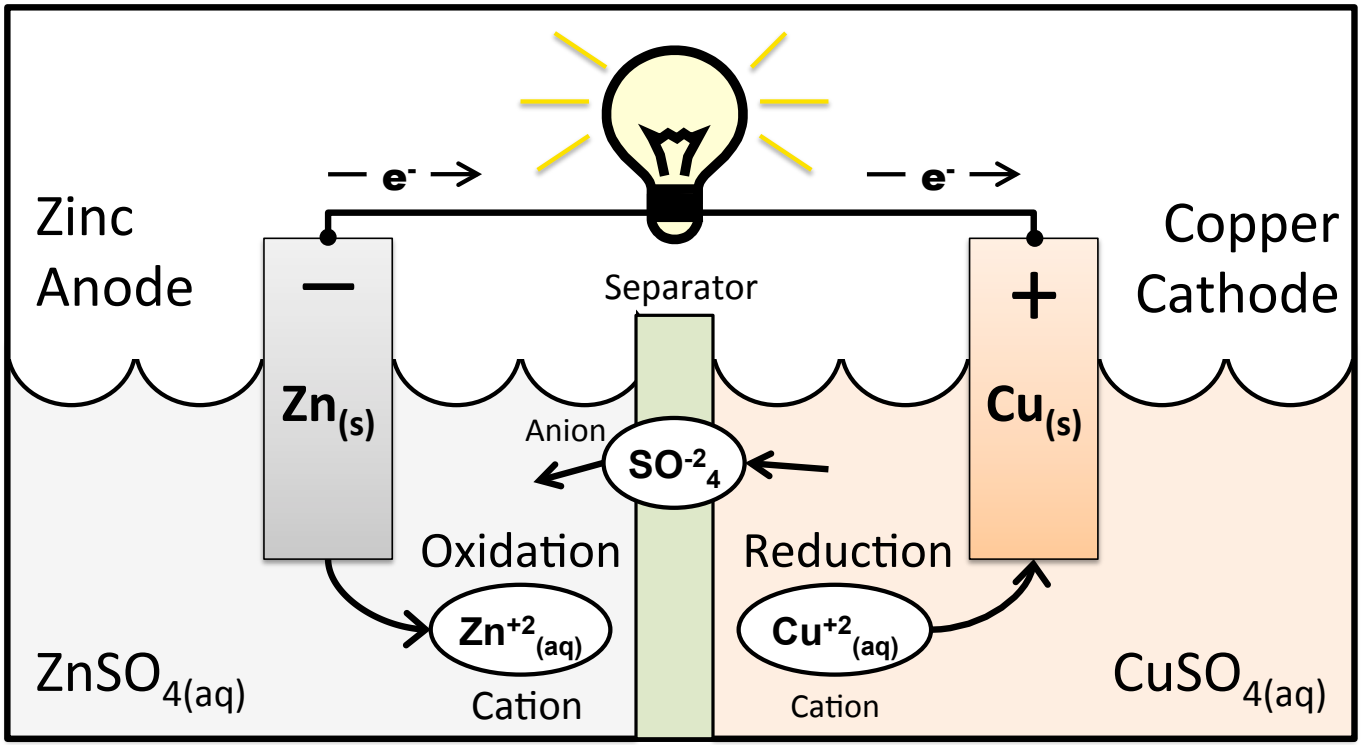


# Cell Assembly - Jelly Roll




Battery Cell Anatomy

# Principles of Operation




Anode Half Cell:

$$Zn_{(s)} \rightarrow Zn^{2+}_{(aq)} + 2e^{-}$$

Cathode Half Cell:

$$Cu^{2+}_{(aq)} + 2e^{-} \rightarrow Cu_{(s)}$$

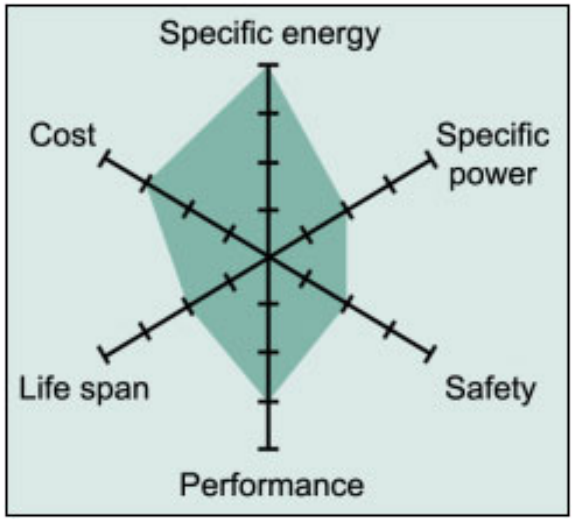
---

Total Rxn:

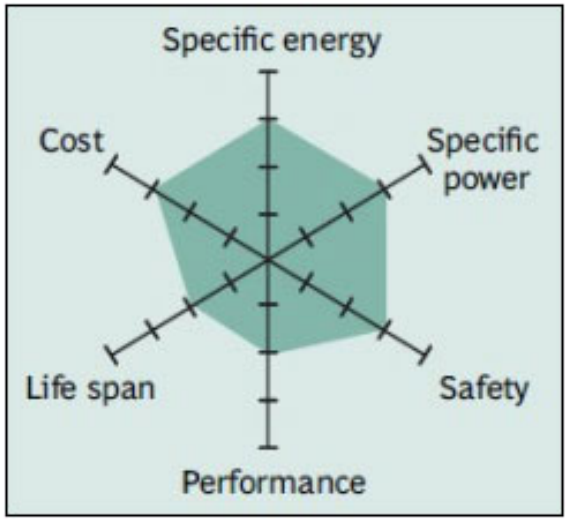
$$Zn_{(s)} + Cu^{2+}_{(aq)} \rightarrow Zn^{2+}_{(aq)} + Cu_{(s)}$$

# Comparison of Lithium Ion (Cathode) Chemistries

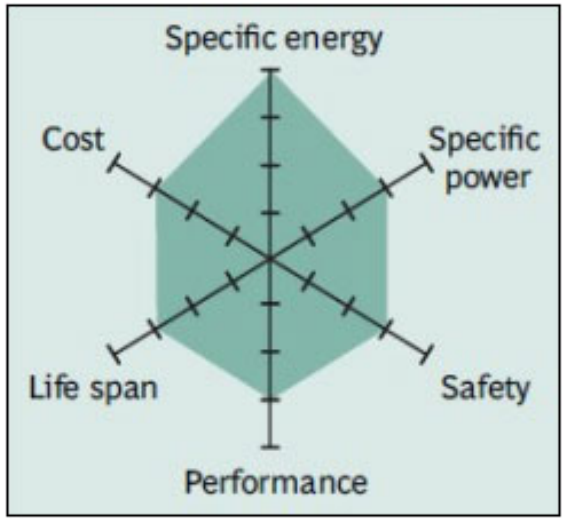
Lithium Cobalt Oxide ($LiCO_2$)



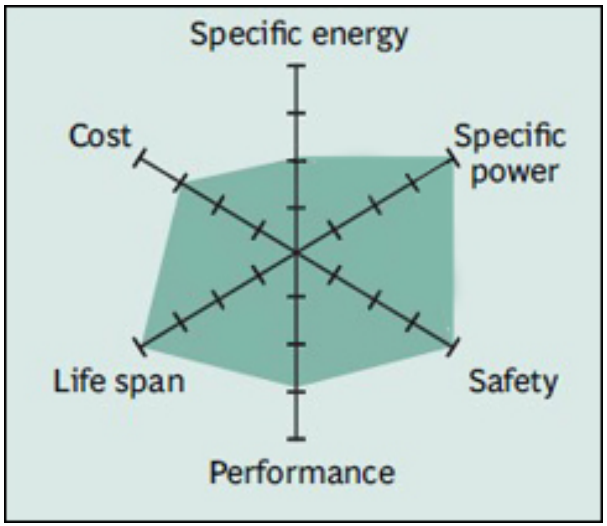

Lithium Manganese Oxide ($LiMn_2O_4$)



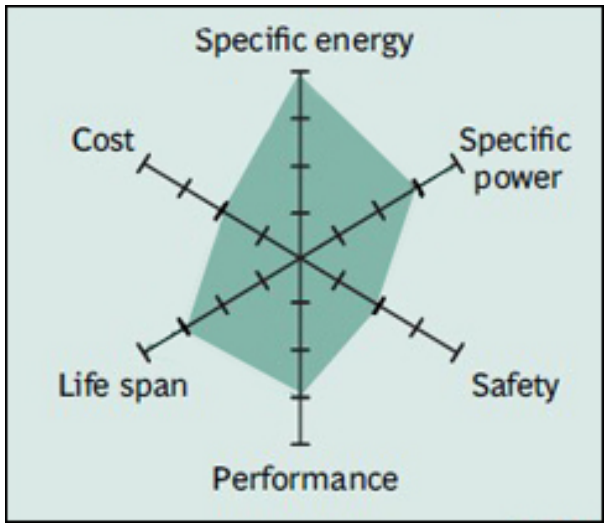

Lithium Nickel Manganese Cobalt Oxide ($LiNiMnCoO_2$)



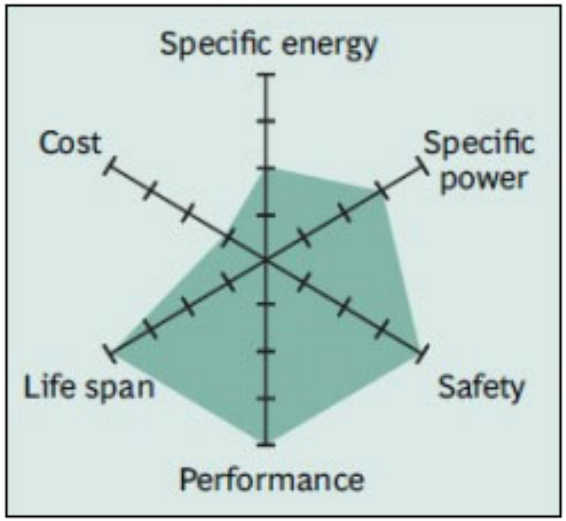

Lithium Iron Phosphate ($LiFePO_4$)




Lithium Nickel Cobalt Aluminum Oxide ($LiNiCoAlO_2$)

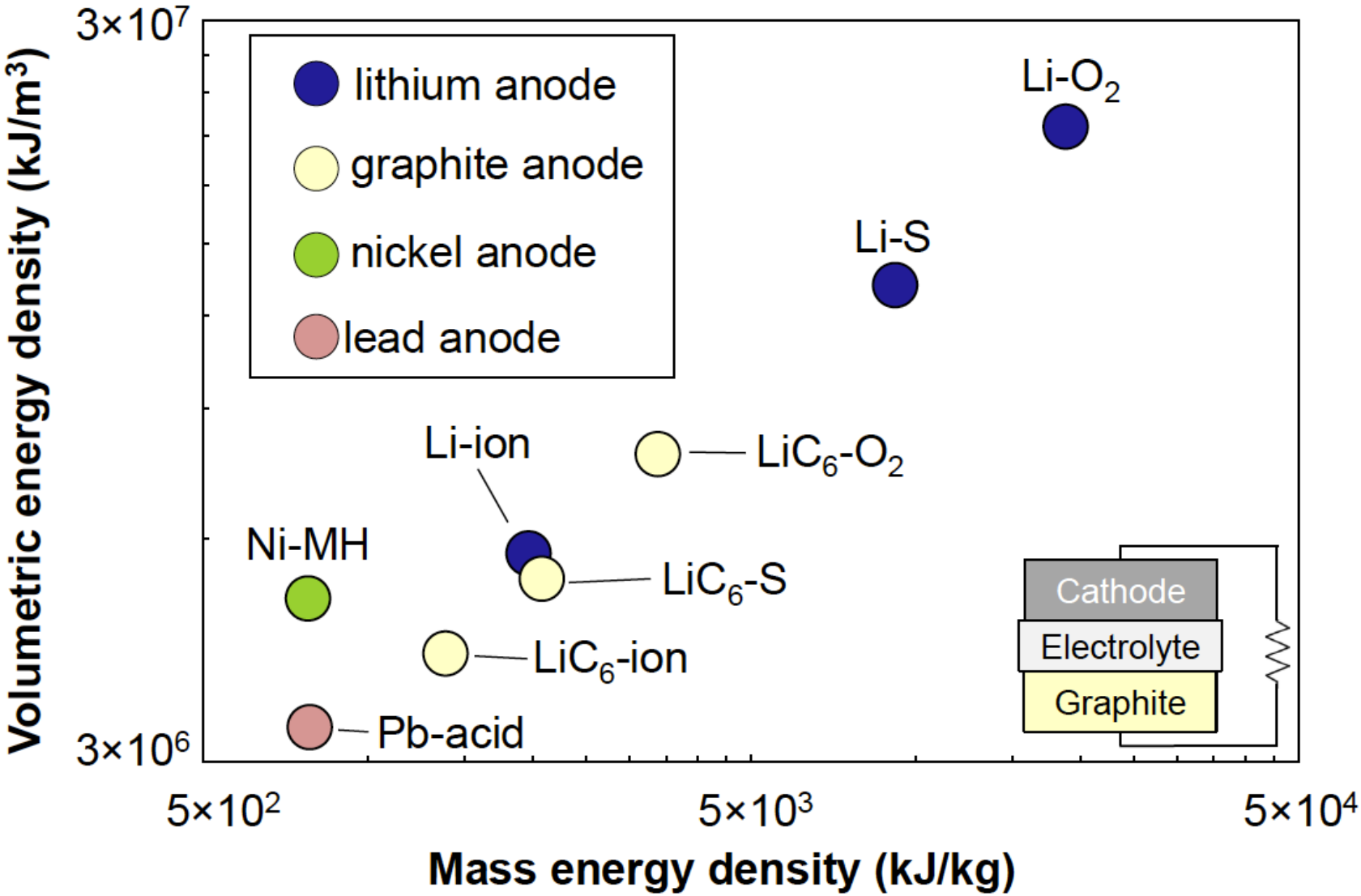



Lithium Titanate ($Li4Ti_5O_{12}$)



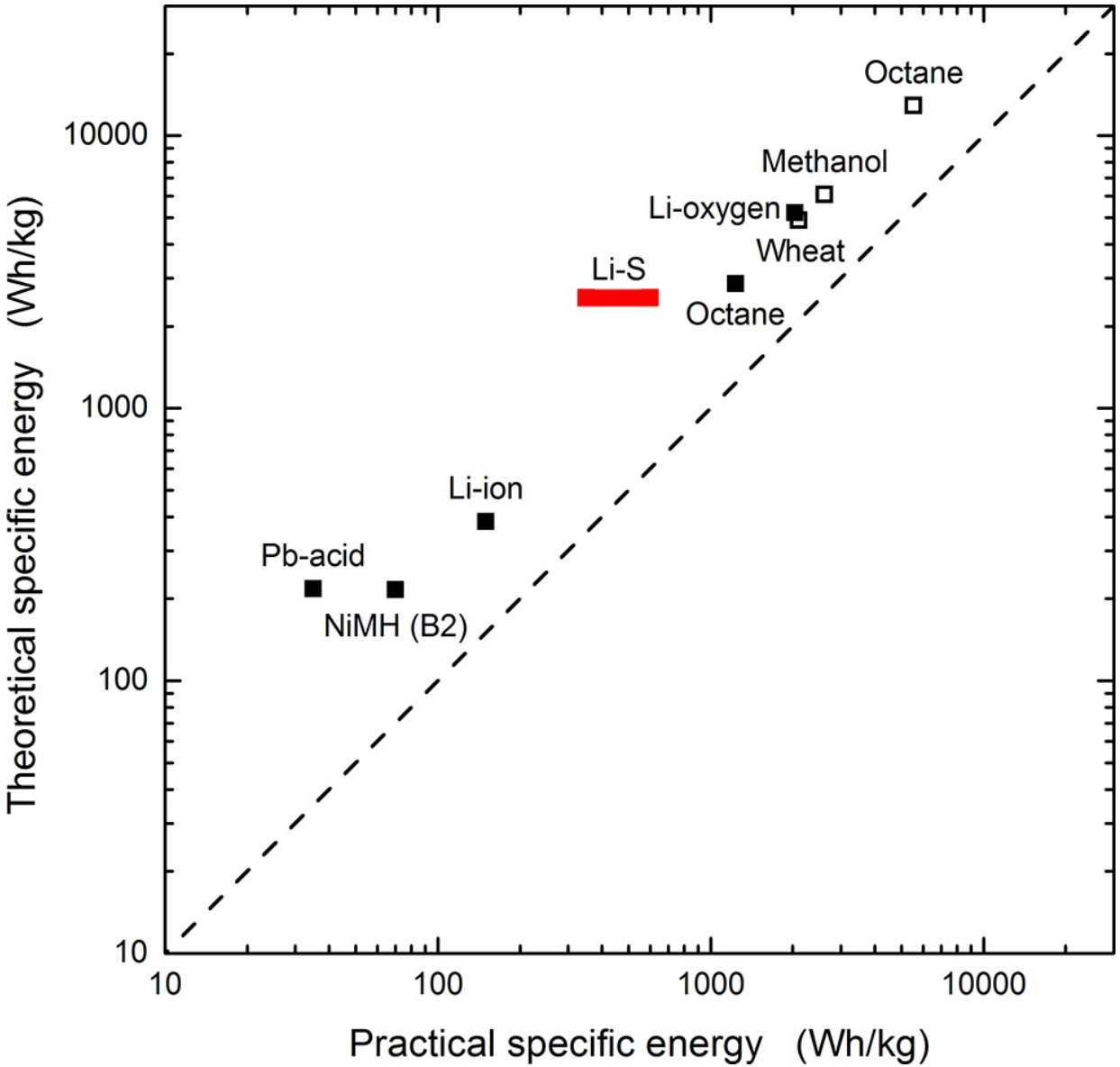

Source: `http://batteryuniversity.com/learn/article/types_of_lithium_ion`

# Energy Density




Source: Katherine Harry & Nitash Balsara, UC Berkeley

# Energy Density




N. P. Balsara, and J. Newman, “Comparing the Energy Content of Batteries, Fuels, and Materials”, Journal of Chemical Education, 90 (2013), 446-52.

# Outline


1 BACKGROUND & BATTERY ELECTROCHEMISTRY FUNDAMENTALS

2 ESTIMATION AND CONTROL PROBLEM STATEMENTS

3 ELECTROCHEMICAL MODEL

4 STATE & PARAMETER ESTIMATION

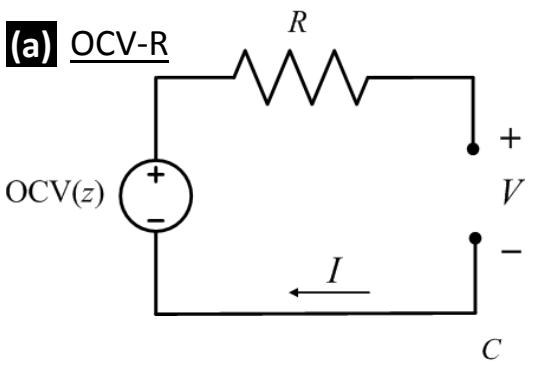
5 CONSTRAINED OPTIMAL CONTROL

6 SUMMARY AND OPPORTUNITIES

# Battery Models

## Equivalent Circuit Model

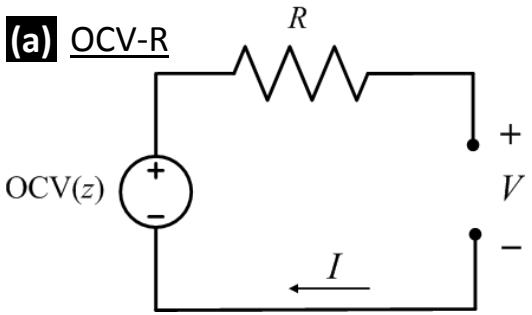
**(a)** OCV-R



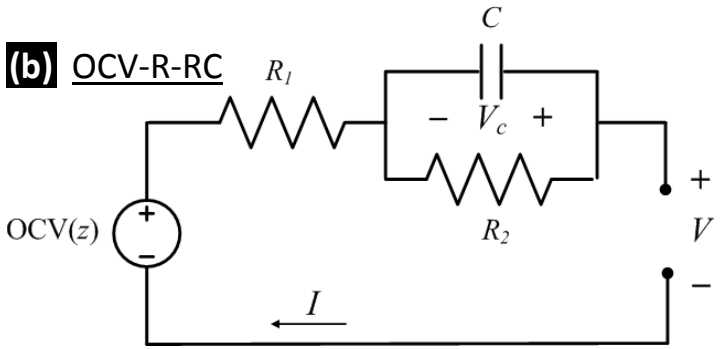
# Battery Models

## Equivalent Circuit Model

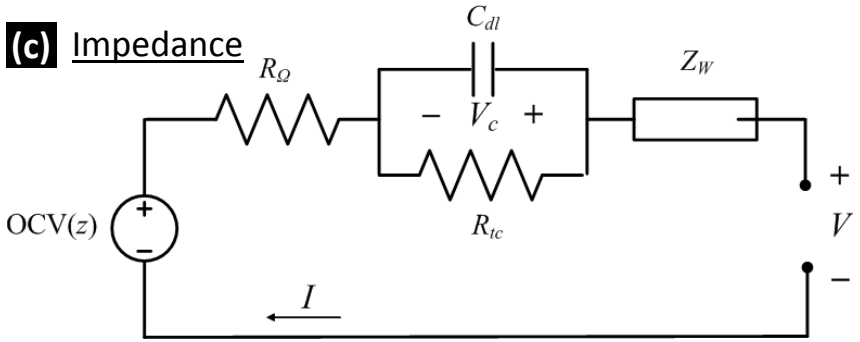
**(a)** OCV-R




**(b)** OCV-R-RC

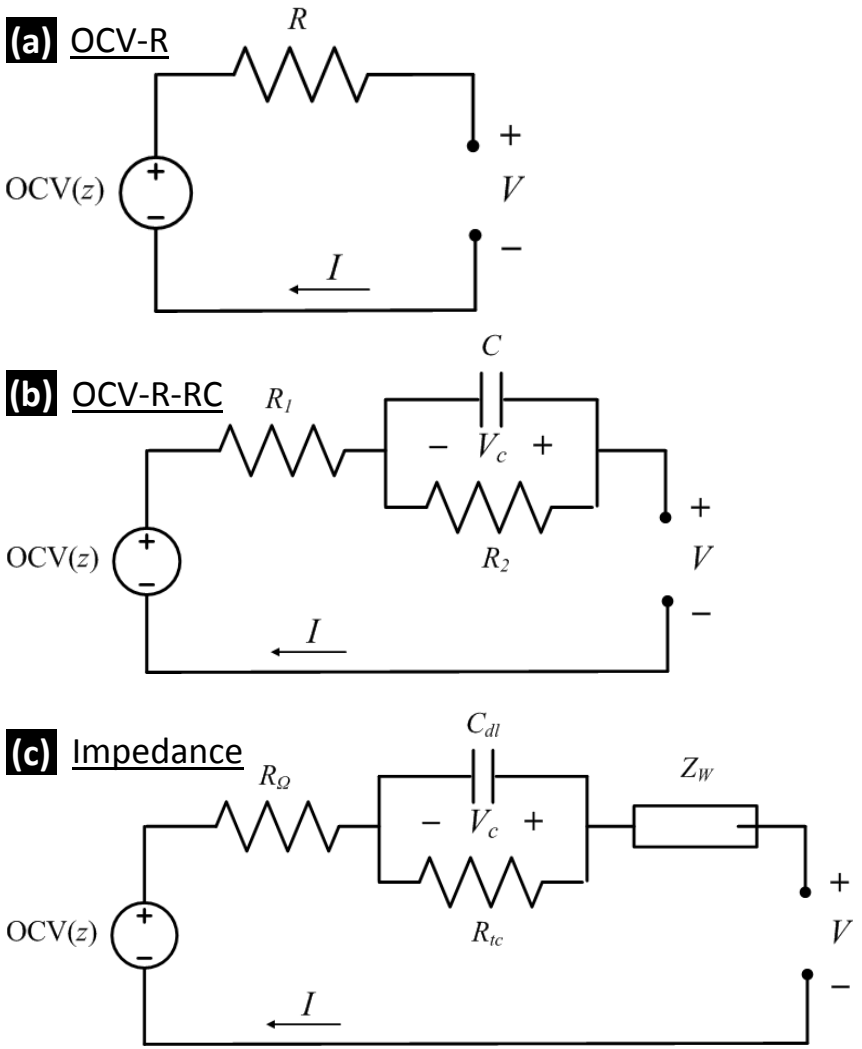



**(c)** Impedance

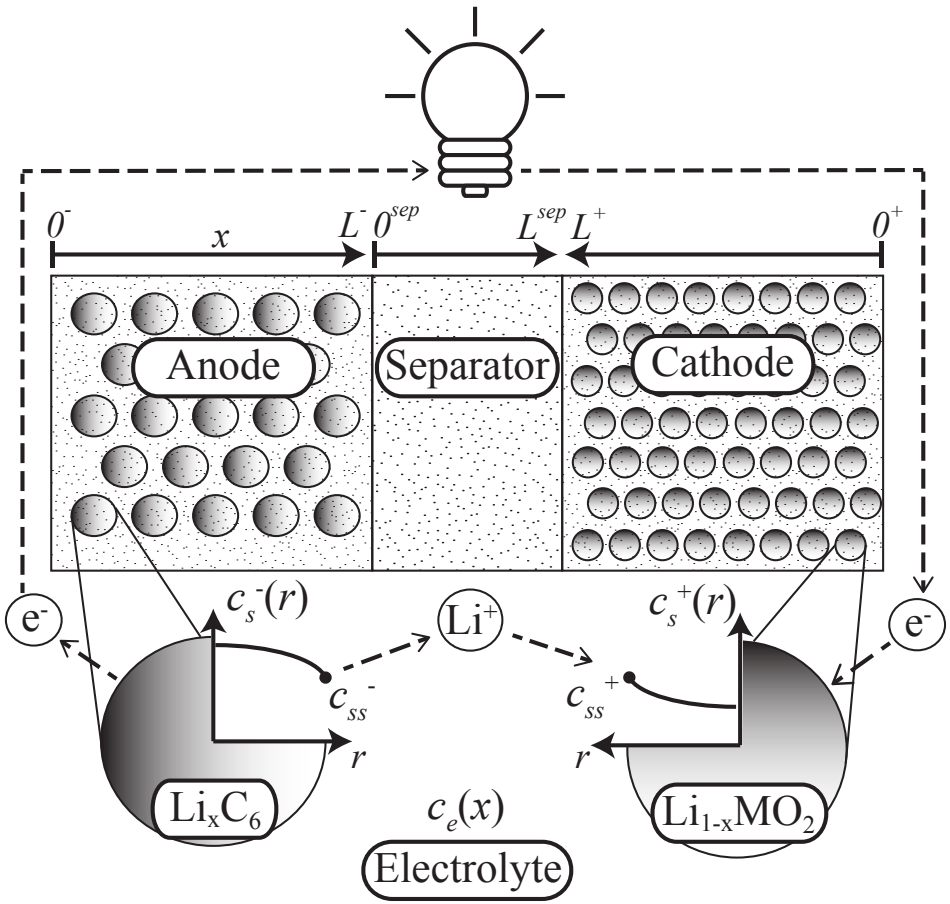


# Battery Models

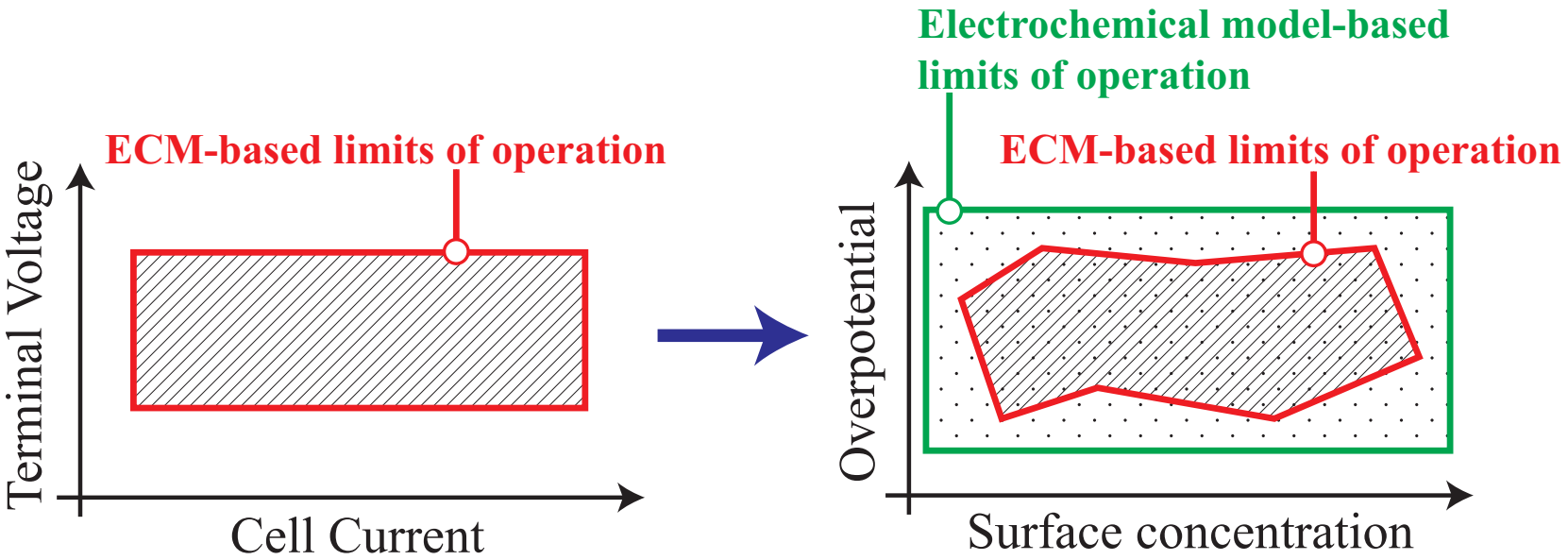
## Equivalent Circuit Model



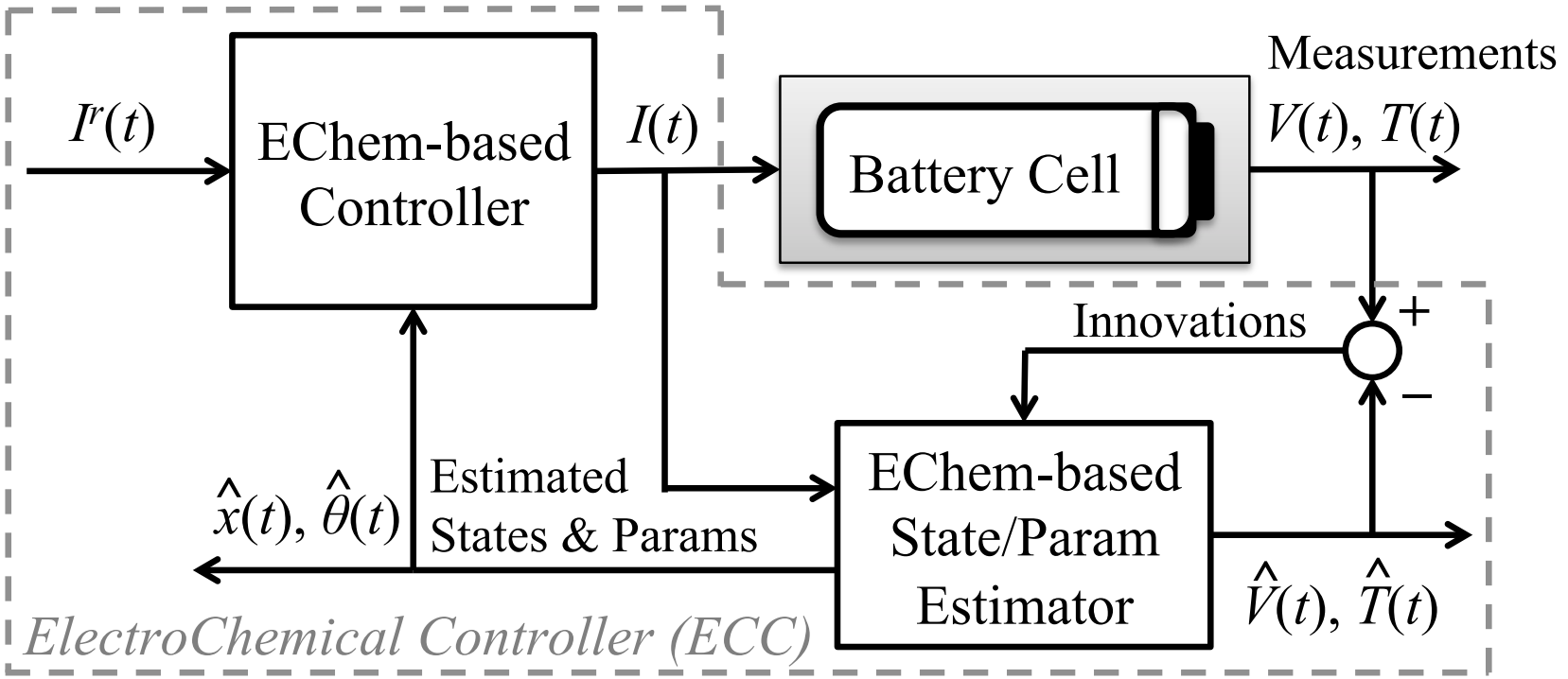

## Electrochemical Model



# Safely Operate Batteries at their Physical Limits

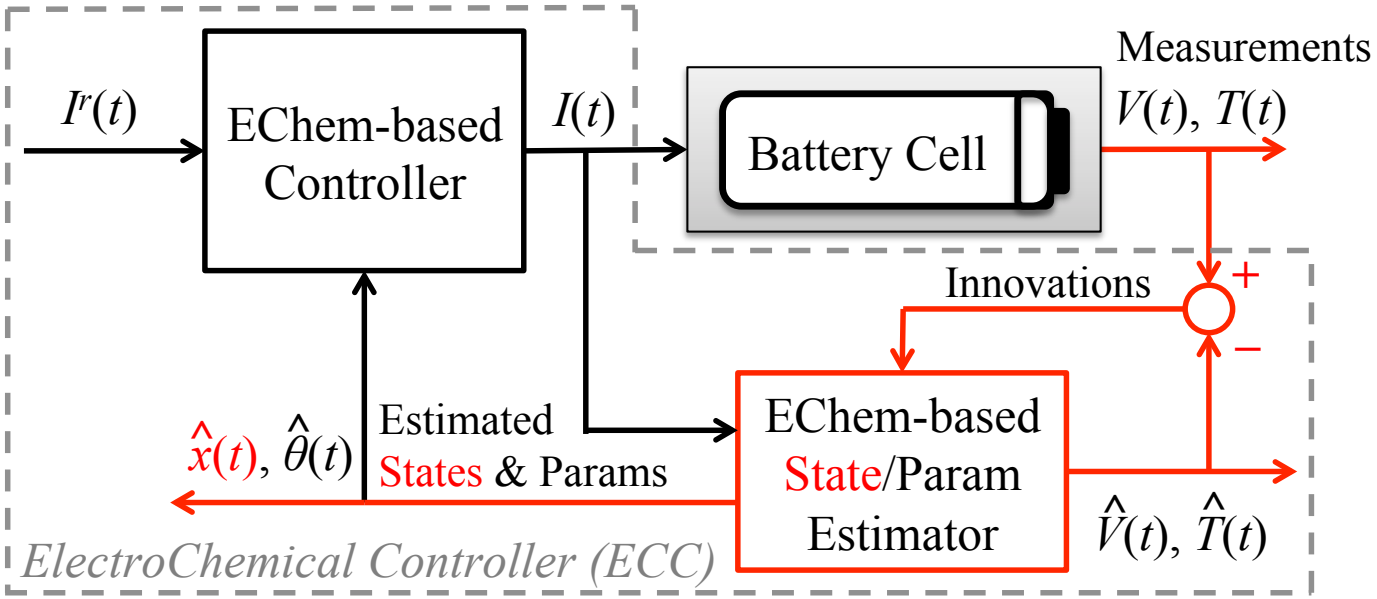


# ElectroChemical Controller (ECC)



# ElectroChemical Controller (ECC)

## The State Estimation Problem



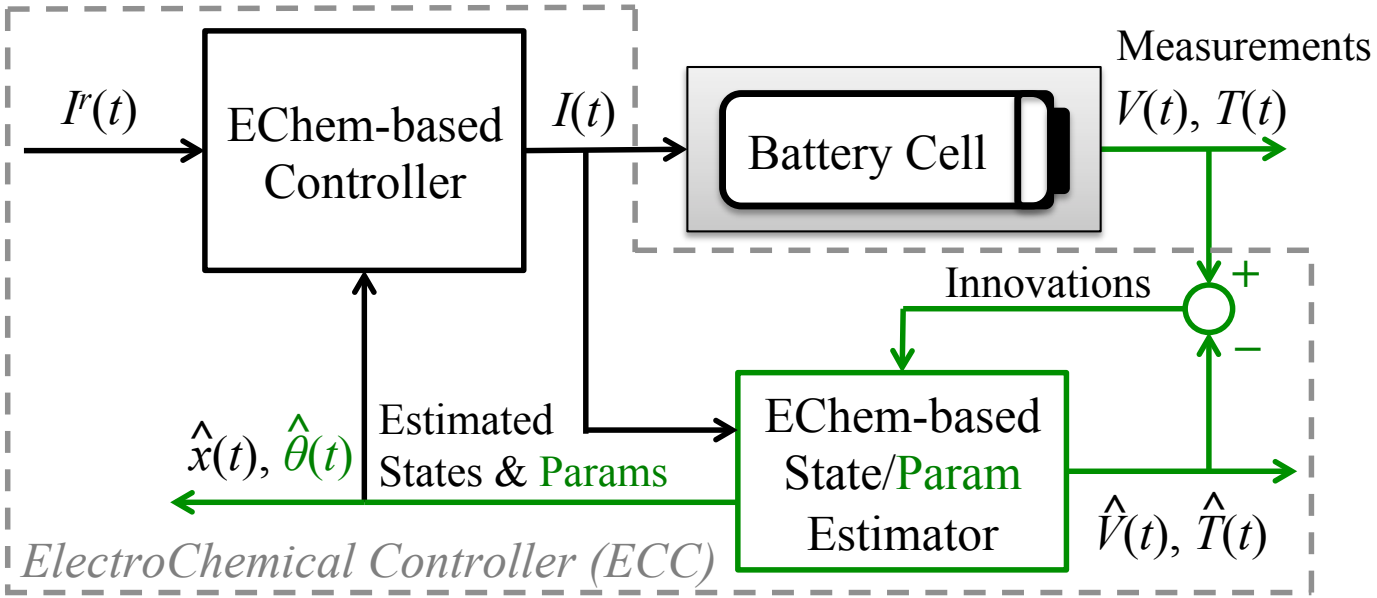

## The State (a.k.a. SOC) Estimation Problem

Given measurements of current $I(t)$, voltage $V(t)$, and temperature $T(t)$, estimate the electrochemical states of interest. Exs:

- bulk solid phase Li concentration (state-of-charge)
- surface solid phase Li concentration (state-of-power)

# ElectroChemical Controller (ECC)

## The Parameter Estimation Problem



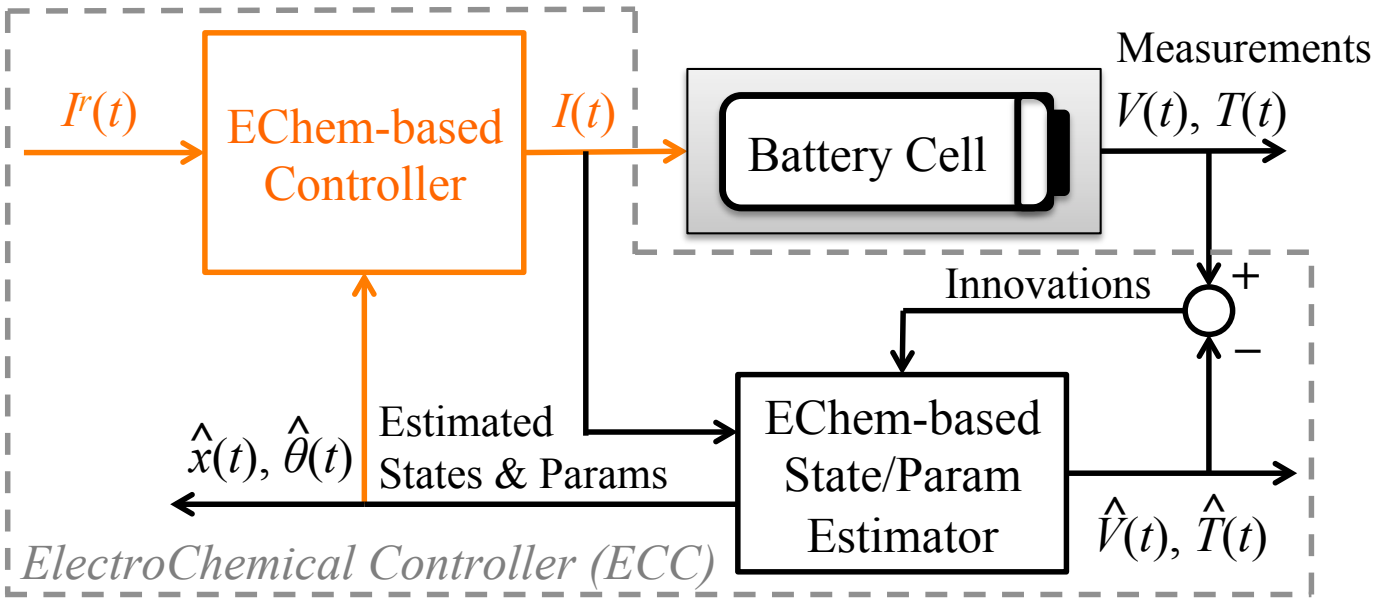

## The Parameter (a.k.a. SOH) Estimation Problem

Given measurements of current $I(t)$, voltage $V(t)$, and temperature $T(t)$, estimate uncertain parameters related to SOH. Exs:

- cyclable lithium (capacity fade)
- volume fraction (capacity fade)
- solid-electrolyte interface resistance (power fade)

# ElectroChemical Controller (ECC)

## The Constrained Control Problem

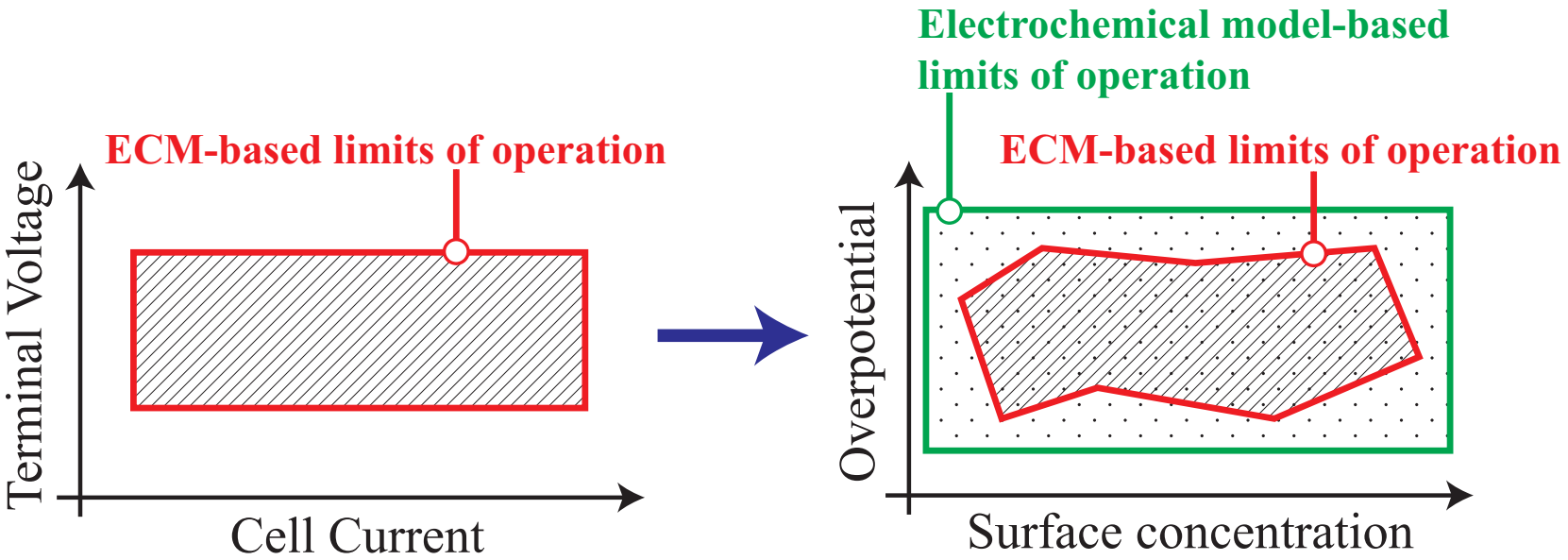



## The Constrained Control Problem

Given measurements of current $I(t)$, voltage $V(t)$, and temperature $T(t)$, control current such that critical electrochemical variables are maintained within safe operating constraints. Exs:

- saturation/depletion of solid phase and electrolyte phase
- side-reaction overpotentials
- internal temperature

# Safely Operate Batteries at their Physical Limits



# Outline


1 BACKGROUND & BATTERY ELECTROCHEMISTRY FUNDAMENTALS

2 ESTIMATION AND CONTROL PROBLEM STATEMENTS

3 ELECTROCHEMICAL MODEL

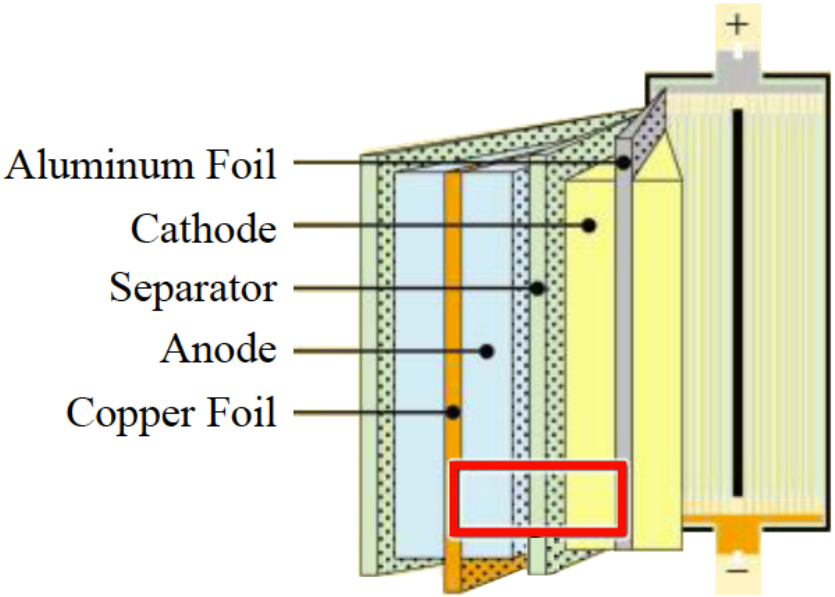
4 STATE & PARAMETER ESTIMATION

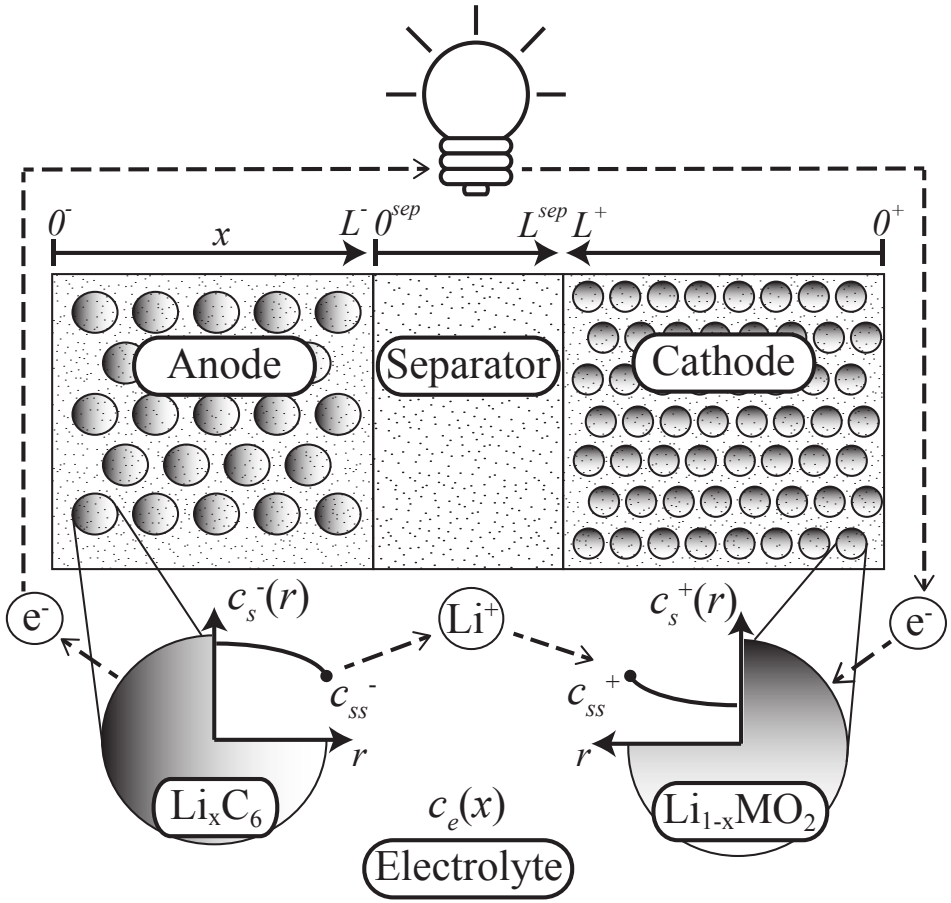
5 CONSTRAINED OPTIMAL CONTROL

6 SUMMARY AND OPPORTUNITIES

# Battery Electrochemistry Model

## The Doyle-Fuller-Newman (DFN) Model




Key References:


- K. Thomas, J. Newman, and R. Darling, Advances in Lithium-Ion Batteries. New York, NY USA: Kluwer Academic/Plenum Publishers, 2002, ch. 12: Mathematical modeling of lithium batteries, pp. 345-392.
- N. A. Chaturvedi, R. Klein, J. Christensen, J. Ahmed, and A. Kojic, “Algorithms for advanced battery-management systems,” IEEE Control Systems Magazine, vol. 30, no. 3, pp. 49-68, 2010.
- J. Newman. (2008) Fortran programs for the simulation of electrochemical systems. [Online]. Available: `http://www.cchem.berkeley.edu/jsngrp/fortran.html`

# Electrochemical Model Equations

well, some of them | Matlab CODE: github.com/scott-moura/dfn

| Description | Equation |
|---|---|
| Solid phase Li concentration | $\frac{\partial c_s^{\pm}}{\partial t}(x,r,t) = \frac{1}{r^2}\frac{\partial}{\partial r}\left[D_s^{\pm} r^2 \frac{\partial c_s^{\pm}}{\partial r}(x,r,t)\right]$ |
| Electrolyte Li concentration | $\varepsilon_e \frac{\partial c_e}{\partial t}(x,t) = \frac{\partial}{\partial x}\left[\varepsilon_e D_e(c_e)\frac{\partial c_e}{\partial x}(x,t) + \frac{1-t_c^0}{F} i_e^{\pm}(x,t)\right]$ |
| Solid potential | $\frac{\partial \phi_s^{\pm}}{\partial x}(x,t) = \frac{i_e^{\pm}(x,t) - I(t)}{\sigma^{\pm}}$ |
| Electrolyte potential | $\frac{\partial \phi_e}{\partial x}(x,t) = -\frac{{i_e}^{\pm}(x,t)}{\kappa} + \frac{2RT(1-t_c^0)}{F}\left(1 + \frac{d\ln f_{c/a}}{d\ln c_e}(x,t)\right)\frac{\partial \ln c_e}{\partial x}(x,t)$ |
| Electrolyte ionic current | $\frac{\partial {i_e}^{\pm}}{\partial x}(x,t) = a_s F {j_n}^{\pm}(x,t)$ |
| Molar flux btw phases | $j_n^{\pm}(x,t) = \frac{1}{F} i_0^{\pm}(x,t)\left[e^{\frac{\alpha_a F}{RT}\eta^{\pm}(x,t)} - e^{-\frac{\alpha_c F}{RT}\eta^{\pm}(x,t)}\right]$ |
| Temperature | $\rho c_P \frac{dT}{dt}(t) = h\left[T^0(t) - T(t)\right] + I(t)V(t) - \int_{0^-}^{0^+} a_s F j_n(x,t)\Delta T(x,t)dx$ |

# Electrochemical Model Equations

well, some of them | Matlab CODE: github.com/scott-moura/dfn

| Description | Equation |
|---|---|
| Solid phase Li concentration | $\frac{\partial c_s^{\pm}}{\partial t}(x,r,t) = \frac{1}{r^2}\frac{\partial}{\partial r}\left[D_s^{\pm} r^2 \frac{\partial c_s^{\pm}}{\partial r}(x,r,t)\right]$ (PDE in $r,t$) |
| Electrolyte Li concentration | $\varepsilon_e \frac{\partial c_e}{\partial t}(x,t) = \frac{\partial}{\partial x}\left[\varepsilon_e D_e(c_e)\frac{\partial c_e}{\partial x}(x,t) + \frac{1-t_c^0}{F} i_e^{\pm}(x,t)\right]$ (PDE in $x,t$) |
| Solid potential | $\frac{\partial \phi_s^{\pm}}{\partial x}(x,t) = \frac{i_e^{\pm}(x,t) - I(t)}{\sigma^{\pm}}$ |
| Electrolyte potential | $\frac{\partial \phi_e}{\partial x}(x,t) = -\frac{{i_e}^{\pm}(x,t)}{\kappa} + \frac{2RT(1-t_c^0)}{F}\left(1 + \frac{d\ln f_{c/a}}{d\ln c_e}(x,t)\right)\frac{\partial \ln c_e}{\partial x}(x,t)$ |
| Electrolyte ionic current | $\frac{\partial {i_e}^{\pm}}{\partial x}(x,t) = a_s F {j_n}^{\pm}(x,t)$ |
| Molar flux btw phases | $j_n^{\pm}(x,t) = \frac{1}{F} i_0^{\pm}(x,t)\left[e^{\frac{\alpha_a F}{RT}\eta^{\pm}(x,t)} - e^{-\frac{\alpha_c F}{RT}\eta^{\pm}(x,t)}\right]$ |
| Temperature | $\rho c_P \frac{dT}{dt}(t) = h\left[T^0(t) - T(t)\right] + I(t)V(t) - \int_{0^-}^{0^+} a_s F j_n(x,t)\Delta T(x,t)dx$ |

# Electrochemical Model Equations

well, some of them | Matlab CODE: github.com/scott-moura/dfn

| Description | Equation |
|---|---|
| Solid phase Li concentration | $\frac{\partial c_s^{\pm}}{\partial t}(x,r,t) = \frac{1}{r^2}\frac{\partial}{\partial r}\left[D_s^{\pm} r^2 \frac{\partial c_s^{\pm}}{\partial r}(x,r,t)\right]$ |
| Electrolyte Li concentration | $\varepsilon_e \frac{\partial c_e}{\partial t}(x,t) = \frac{\partial}{\partial x}\left[\varepsilon_e D_e(c_e)\frac{\partial c_e}{\partial x}(x,t) + \frac{1-t_c^0}{F} i_e^{\pm}(x,t)\right]$ |
| Solid potential | $\frac{\partial \phi_s^{\pm}}{\partial x}(x,t) = \frac{i_e^{\pm}(x,t) - I(t)}{\sigma^{\pm}}$ (ODE in $x$) |
| Electrolyte potential | $\frac{\partial \phi_e}{\partial x}(x,t) = -\frac{{i_e}^{\pm}(x,t)}{\kappa} + \frac{2RT(1-t_c^0)}{F}\left(1 + \frac{d\ln f_{c/a}}{d\ln c_e}(x,t)\right)\frac{\partial \ln c_e}{\partial x}(x,t)$ (ODE in $x$) |
| Electrolyte ionic current | $\frac{\partial {i_e}^{\pm}}{\partial x}(x,t) = a_s F {j_n}^{\pm}(x,t)$ (ODE in $x$) |
| Molar flux btw phases | $j_n^{\pm}(x,t) = \frac{1}{F} i_0^{\pm}(x,t)\left[e^{\frac{\alpha_a F}{RT}\eta^{\pm}(x,t)} - e^{-\frac{\alpha_c F}{RT}\eta^{\pm}(x,t)}\right]$ |
| Temperature | $\rho c_P \frac{dT}{dt}(t) = h\left[T^0(t) - T(t)\right] + I(t)V(t) - \int_{0^-}^{0^+} a_s F j_n(x,t)\Delta T(x,t)dx$ |

# Electrochemical Model Equations

well, some of them | Matlab CODE: github.com/scott-moura/dfn

| Description | Equation |
|---|---|
| Solid phase Li concentration | $\frac{\partial c_s^{\pm}}{\partial t}(x,r,t) = \frac{1}{r^2}\frac{\partial}{\partial r}\left[D_s^{\pm} r^2 \frac{\partial c_s^{\pm}}{\partial r}(x,r,t)\right]$ |
| Electrolyte Li concentration | $\varepsilon_e \frac{\partial c_e}{\partial t}(x,t) = \frac{\partial}{\partial x}\left[\varepsilon_e D_e(c_e)\frac{\partial c_e}{\partial x}(x,t) + \frac{1-t_c^0}{F} i_e^{\pm}(x,t)\right]$ |
| Solid potential | $\frac{\partial \phi_s^{\pm}}{\partial x}(x,t) = \frac{i_e^{\pm}(x,t) - I(t)}{\sigma^{\pm}}$ |
| Electrolyte potential | $\frac{\partial \phi_e}{\partial x}(x,t) = -\frac{{i_e}^{\pm}(x,t)}{\kappa} + \frac{2RT(1-t_c^0)}{F}\left(1 + \frac{d\ln f_{c/a}}{d\ln c_e}(x,t)\right)\frac{\partial \ln c_e}{\partial x}(x,t)$ |
| Electrolyte ionic current | $\frac{\partial {i_e}^{\pm}}{\partial x}(x,t) = a_s F {j_n}^{\pm}(x,t)$ |
| Molar flux btw phases | $j_n^{\pm}(x,t) = \frac{1}{F} i_0^{\pm}(x,t)\left[e^{\frac{\alpha_a F}{RT}\eta^{\pm}(x,t)} - e^{-\frac{\alpha_c F}{RT}\eta^{\pm}(x,t)}\right]$ (nonlinear AE) |
| Temperature | $\rho c_P \frac{dT}{dt}(t) = h\left[T^0(t) - T(t)\right] + I(t)V(t) - \int_{0^-}^{0^+} a_s F j_n(x,t)\Delta T(x,t)dx$ |

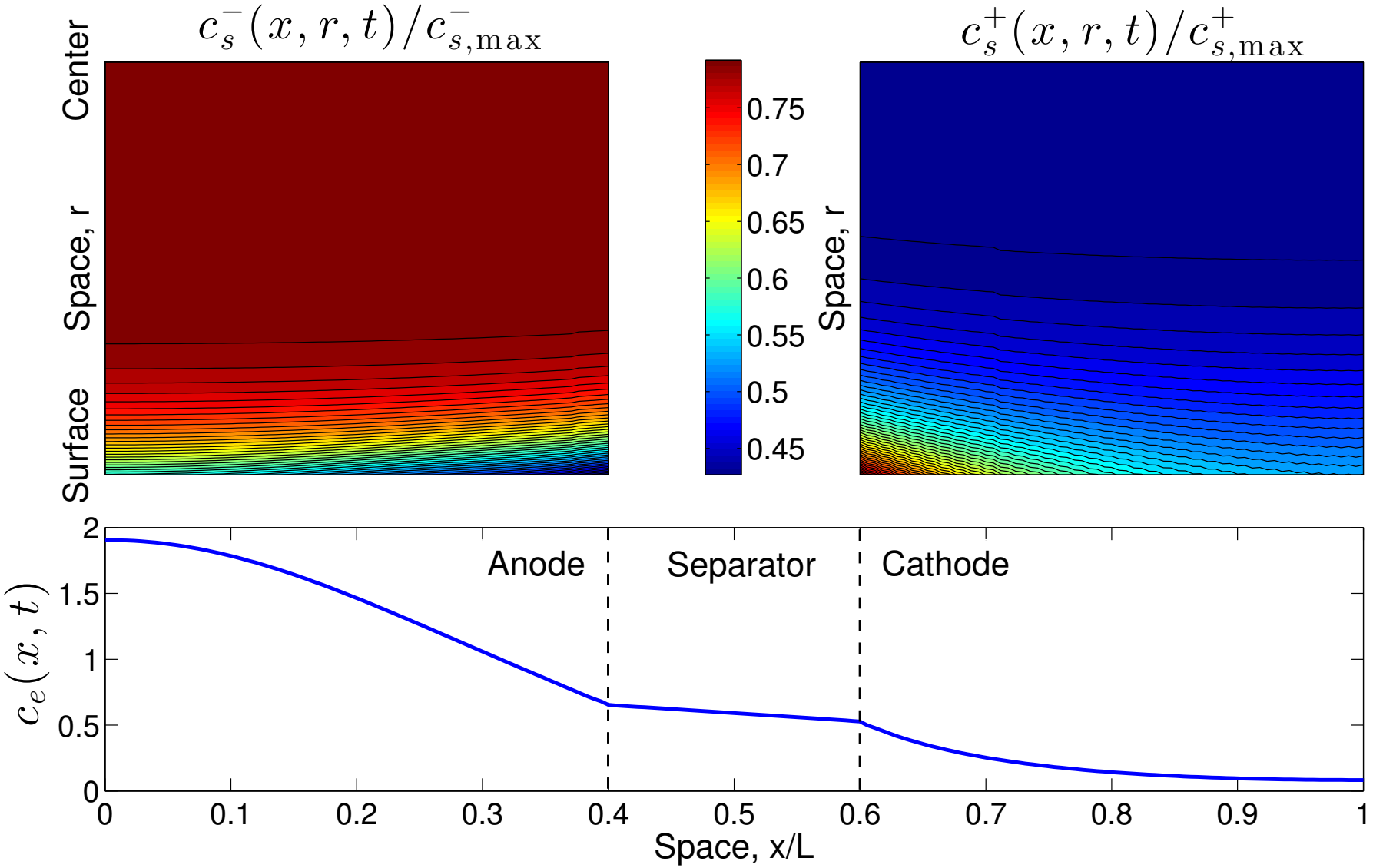
# Electrochemical Model Equations

well, some of them | Matlab CODE: github.com/scott-moura/dfn

| Description | Equation |
|---|---|
| Solid phase Li concentration | $\frac{\partial c_s^{\pm}}{\partial t}(x,r,t) = \frac{1}{r^2}\frac{\partial}{\partial r}\left[D_s^{\pm} r^2 \frac{\partial c_s^{\pm}}{\partial r}(x,r,t)\right]$ |
| Electrolyte Li concentration | $\varepsilon_e \frac{\partial c_e}{\partial t}(x,t) = \frac{\partial}{\partial x}\left[\varepsilon_e D_e(c_e)\frac{\partial c_e}{\partial x}(x,t) + \frac{1-t_c^0}{F} i_e^{\pm}(x,t)\right]$ |
| Solid potential | $\frac{\partial \phi_s^{\pm}}{\partial x}(x,t) = \frac{i_e^{\pm}(x,t) - I(t)}{\sigma^{\pm}}$ |
| Electrolyte potential | $\frac{\partial \phi_e}{\partial x}(x,t) = -\frac{{i_e}^{\pm}(x,t)}{\kappa} + \frac{2RT(1-t_c^0)}{F}\left(1 + \frac{d\ln f_{c/a}}{d\ln c_e}(x,t)\right)\frac{\partial \ln c_e}{\partial x}(x,t)$ |
| Electrolyte ionic current | $\frac{\partial {i_e}^{\pm}}{\partial x}(x,t) = a_s F {j_n}^{\pm}(x,t)$ |
| Molar flux btw phases | $j_n^{\pm}(x,t) = \frac{1}{F} i_0^{\pm}(x,t)\left[e^{\frac{\alpha_a F}{RT}\eta^{\pm}(x,t)} - e^{-\frac{\alpha_c F}{RT}\eta^{\pm}(x,t)}\right]$ |
| Temperature | $\rho c_P \frac{dT}{dt}(t) = h\left[T^0(t) - T(t)\right] + I(t)V(t) - \int_{0^-}^{0^+} a_s F j_n(x,t)\Delta T(x,t)dx$ (ODE in $t$) |

# Simulations

## $LiCoO_2$-C cell | 5C discharge after 30sec



# Animation of Li Ion Evolution

## Pulsed Discharge @ 5C

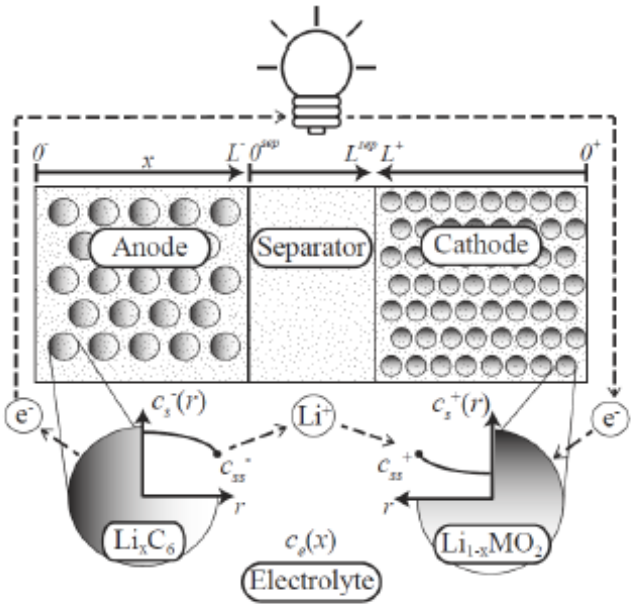
# Model Reduction

Derive control-oriented models from full electrochemical model to:

- Achieve “fast” and “sufficiently accurate” simulations
- Study state observability & parameter identifiability
- Analyze stability, optimality, feasibility

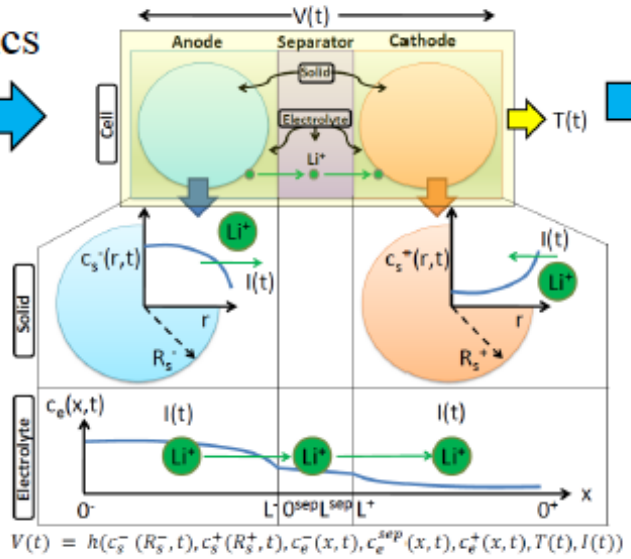
# Model Reduction

## Electrochemical Model




Less Physics

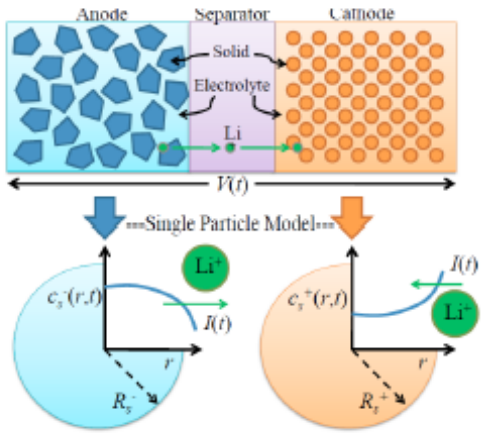
## Single Particle + Electrolyte and Thermal Dynamics




$$V(t) = h(c_s^-(R_s^-,t), c_s^+(R_s^+,t), c_e^-(x,t), c_e^{sep}(x,t), c_e^+(x,t), T(t), I(t))$$

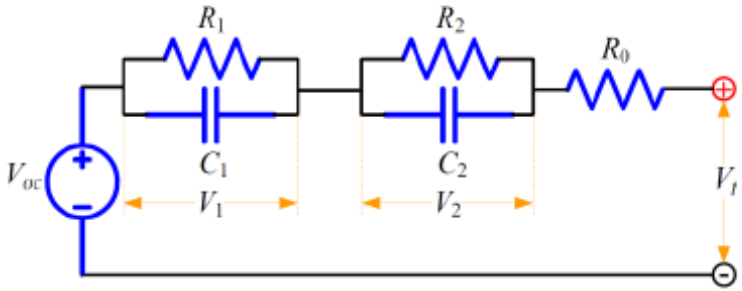
Less Physics

## Single Particle Model




Less Physics

## Equivalent Circuit Model



# Model Reduction

Methods in literature:

- Spectral methods [6], [7]
- Residue grouping [8]
- Quasilinearization & Padé approximation [9]
- Principle orthogonal decomposition [10]
- Single particle model variants [11], [12], [13]
- and much, much more (to be discussed by co-presenters)

This is a very popular topic. Won't be discussed further in this talk.

# Outline


1 BACKGROUND & BATTERY ELECTROCHEMISTRY FUNDAMENTALS

2 ESTIMATION AND CONTROL PROBLEM STATEMENTS

3 ELECTROCHEMICAL MODEL

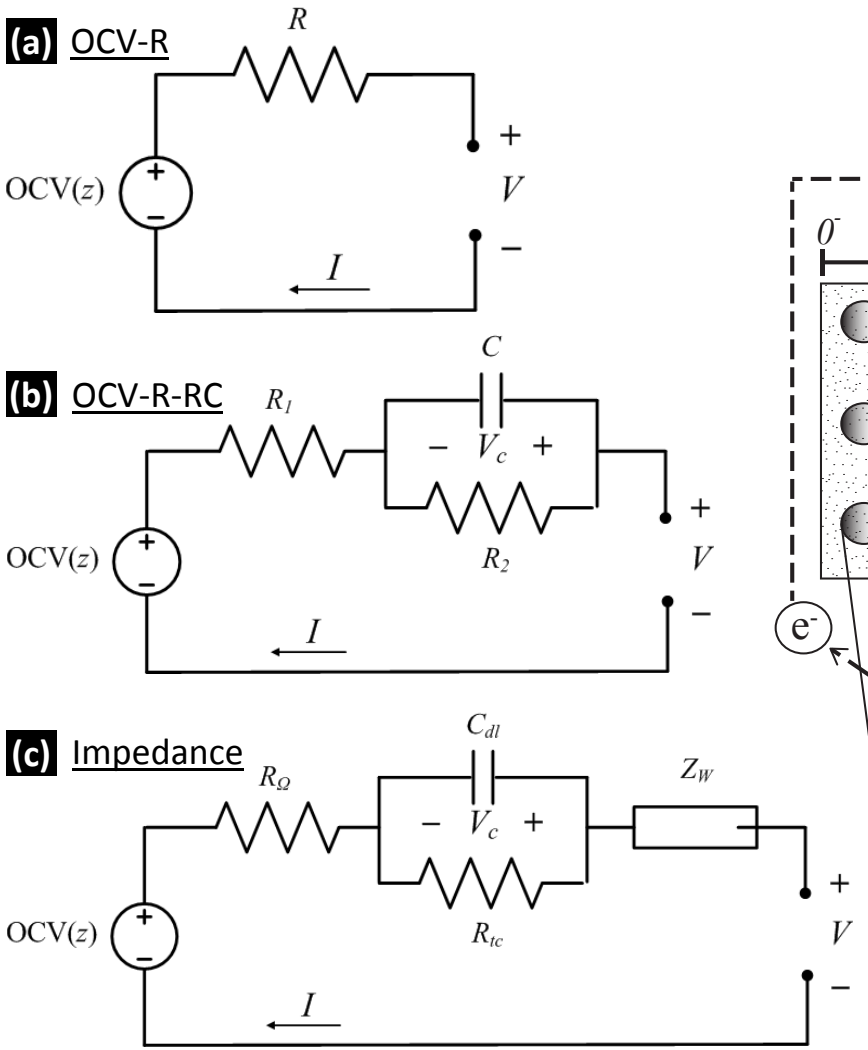
4 STATE & PARAMETER ESTIMATION

5 CONSTRAINED OPTIMAL CONTROL

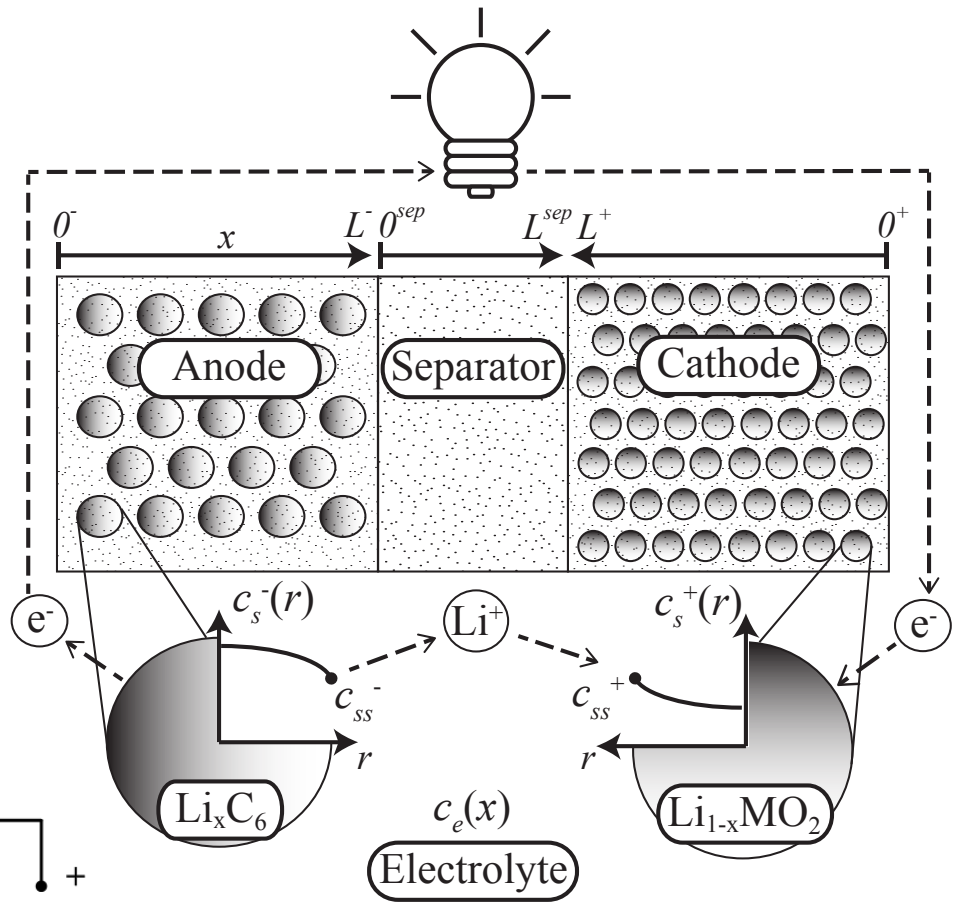
6 SUMMARY AND OPPORTUNITIES

# Survey of SOC/SOH Estimation Literature

## Equivalent Circuit Model (ECM)




## Electrochemical Model



# Survey of SOC/SOH Estimation Literature

## Equivalent Circuit Model (ECM)

Study ECM variant *X*
with estimation algorithm *Y*

Not the focus here.

## Electrochemical Model

EChem-based estimation has recently emerged

Focus on estimation for reduced EChem models

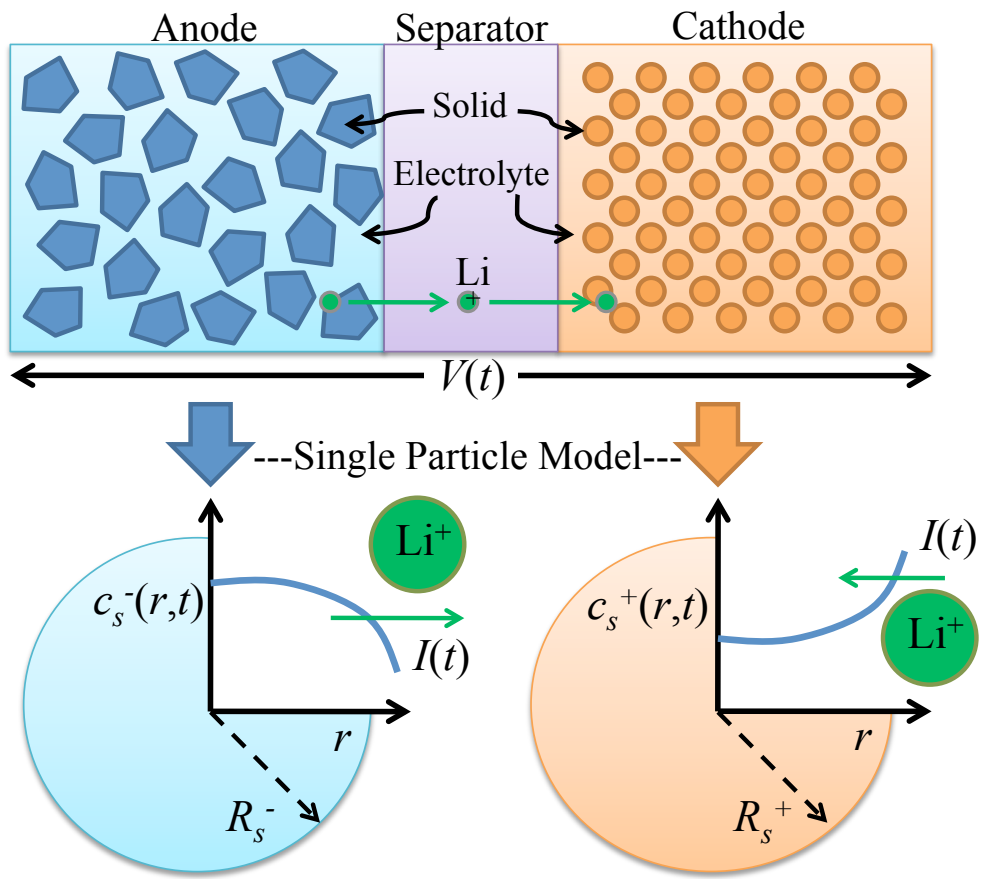
Model reduction and estimation are intimately intertwined

Ideally, want to prove estimation error stability for the highest fidelity model possible

First wave of studies consider a "Single Particle Model" [11], [12], [14], [15]

**Difficulty of proving stability increases as model complexity/fidelity increases. Core difficulty is lack of complete observability and nonlinear identifiability.**

# Single Particle Model (SPM)

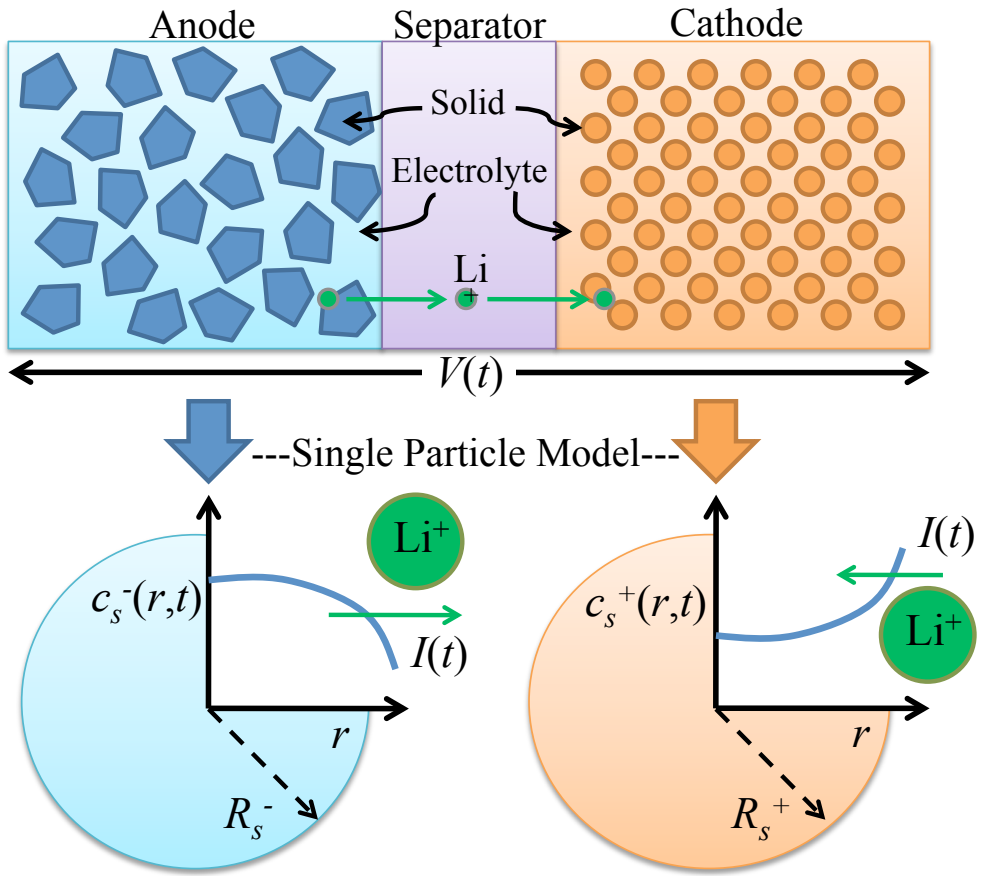


# Single Particle Model (SPM)

Diffusion of Li in solid phase:

$$\frac{\partial c_s^-}{\partial t}(r,t) = \frac{D_s^-}{r^2}\frac{\partial}{\partial r}\left[r^2\frac{\partial^2 c_s^-}{\partial r^2}(r,t)\right]$$

$$\frac{\partial c_s^+}{\partial t}(r,t) = \frac{D_s^+}{r^2}\frac{\partial}{\partial r}\left[r^2\frac{\partial^2 c_s^+}{\partial r^2}(r,t)\right]$$



# Single Particle Model (SPM)

Diffusion of Li in solid phase:

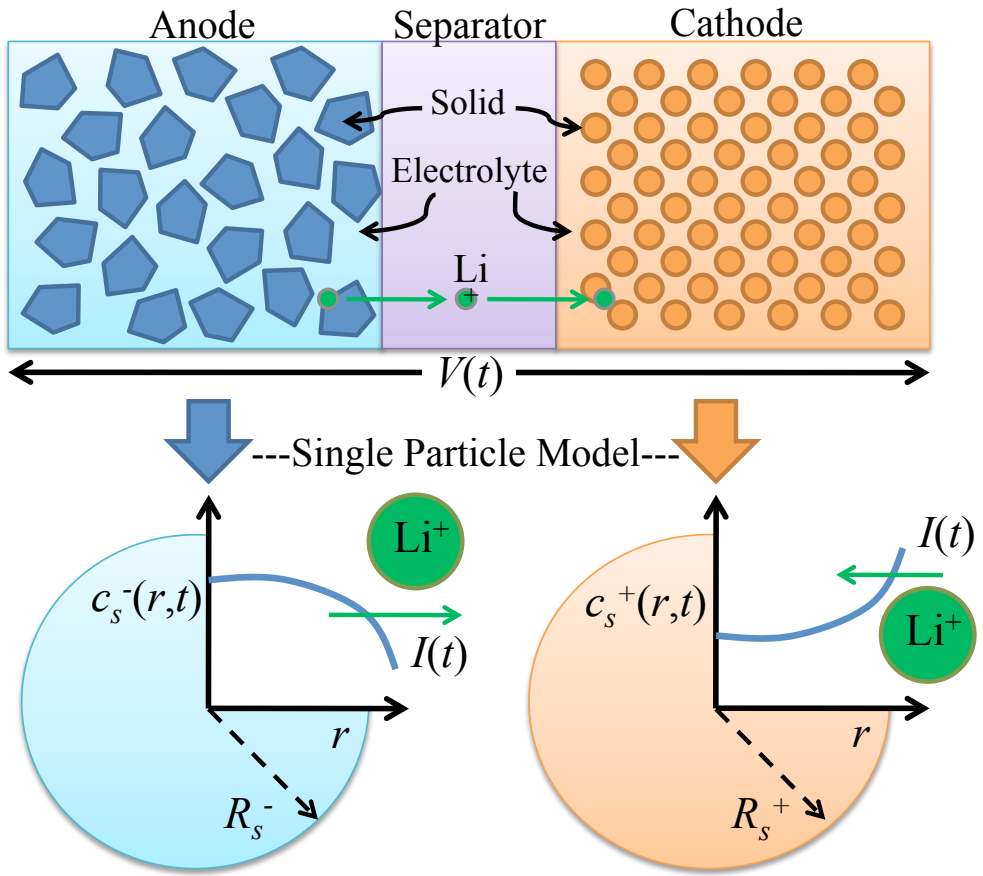
$$\frac{\partial c_s^-}{\partial t}(r,t) = \frac{D_s^-}{r^2}\frac{\partial}{\partial r}\left[r^2\frac{\partial^2 c_s^-}{\partial r^2}(r,t)\right]$$

$$\frac{\partial c_s^+}{\partial t}(r,t) = \frac{D_s^+}{r^2}\frac{\partial}{\partial r}\left[r^2\frac{\partial^2 c_s^+}{\partial r^2}(r,t)\right]$$

Boundary conditions:

$$\frac{\partial c_s^-}{\partial r}(R_s^-,t) = -\rho^- I(t)$$

$$\frac{\partial c_s^+}{\partial r}(R_s^+,t) = \rho^+ I(t)$$



# Single Particle Model (SPM)

Diffusion of Li in solid phase:

$$\frac{\partial c_s^-}{\partial t}(r,t) = \frac{D_s^-}{r^2}\frac{\partial}{\partial r}\left[r^2\frac{\partial^2 c_s^-}{\partial r^2}(r,t)\right]$$

$$\frac{\partial c_s^+}{\partial t}(r,t) = \frac{D_s^+}{r^2}\frac{\partial}{\partial r}\left[r^2\frac{\partial^2 c_s^+}{\partial r^2}(r,t)\right]$$

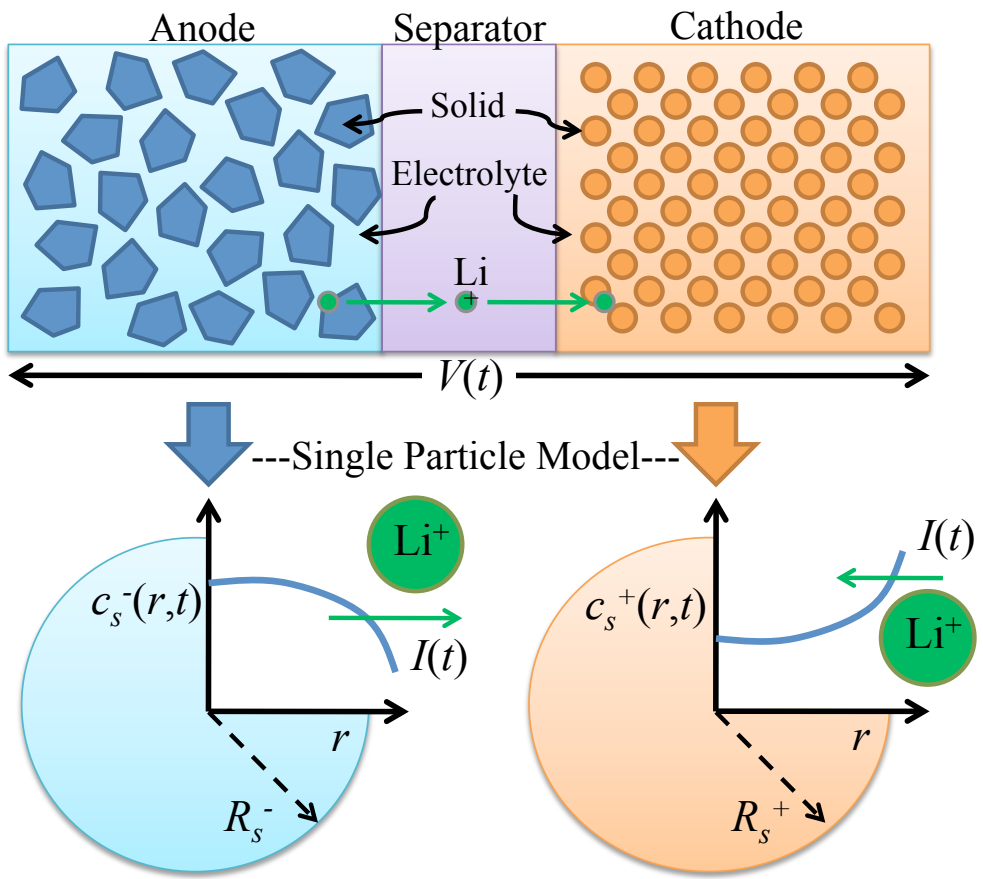
Boundary conditions:

$$\frac{\partial c_s^-}{\partial r}(R_s^-,t) = -\rho^- I(t)$$

$$\frac{\partial c_s^+}{\partial r}(R_s^+,t) = \rho^+ I(t)$$

Voltage Output Function:

$$V(t) = h(c_{ss}^-(t), c_{ss}^+(t), I(t); \theta)$$



# Single Particle Model (SPM)

Diffusion of Li in solid phase:

$$\frac{\partial c_s^-}{\partial t}(r,t) = \frac{D_s^-}{r^2}\frac{\partial}{\partial r}\left[r^2\frac{\partial^2 c_s^-}{\partial r^2}(r,t)\right]$$

$$\frac{\partial c_s^+}{\partial t}(r,t) = \frac{D_s^+}{r^2}\frac{\partial}{\partial r}\left[r^2\frac{\partial^2 c_s^+}{\partial r^2}(r,t)\right]$$

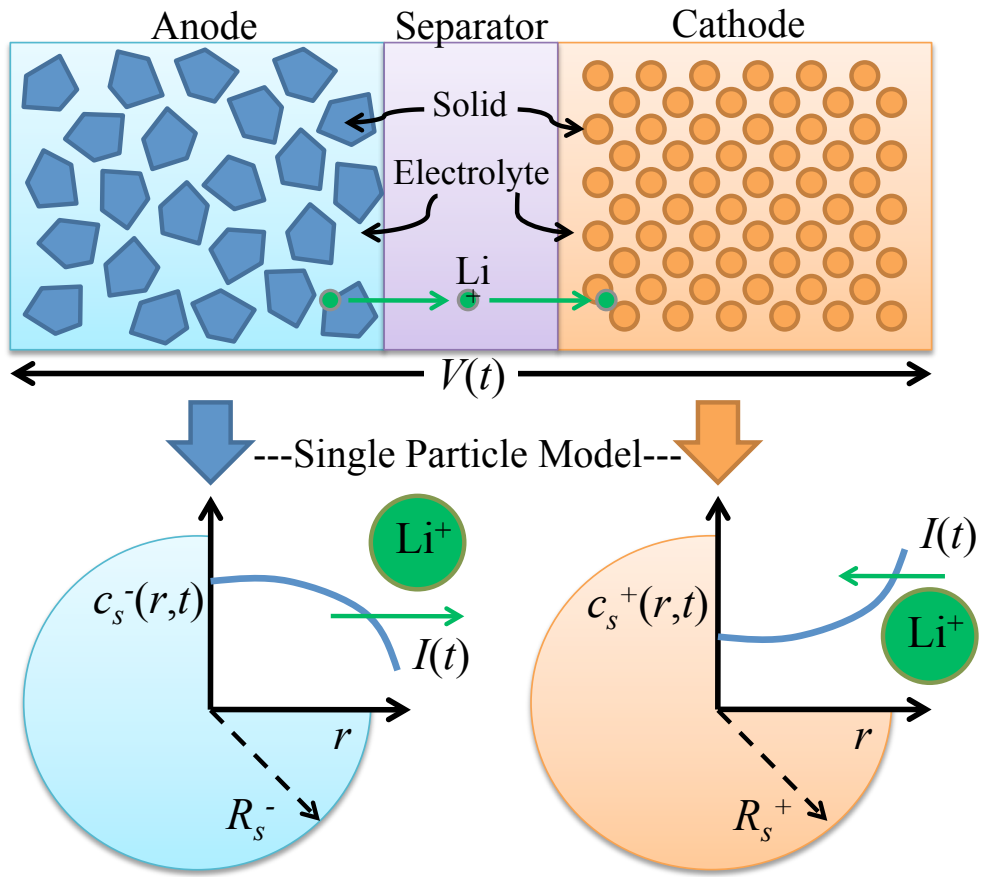
Boundary conditions:

$$\frac{\partial c_s^-}{\partial r}(R_s^-,t) = -\rho^- I(t)$$

$$\frac{\partial c_s^+}{\partial r}(R_s^+,t) = \rho^+ I(t)$$

Voltage Output Function:

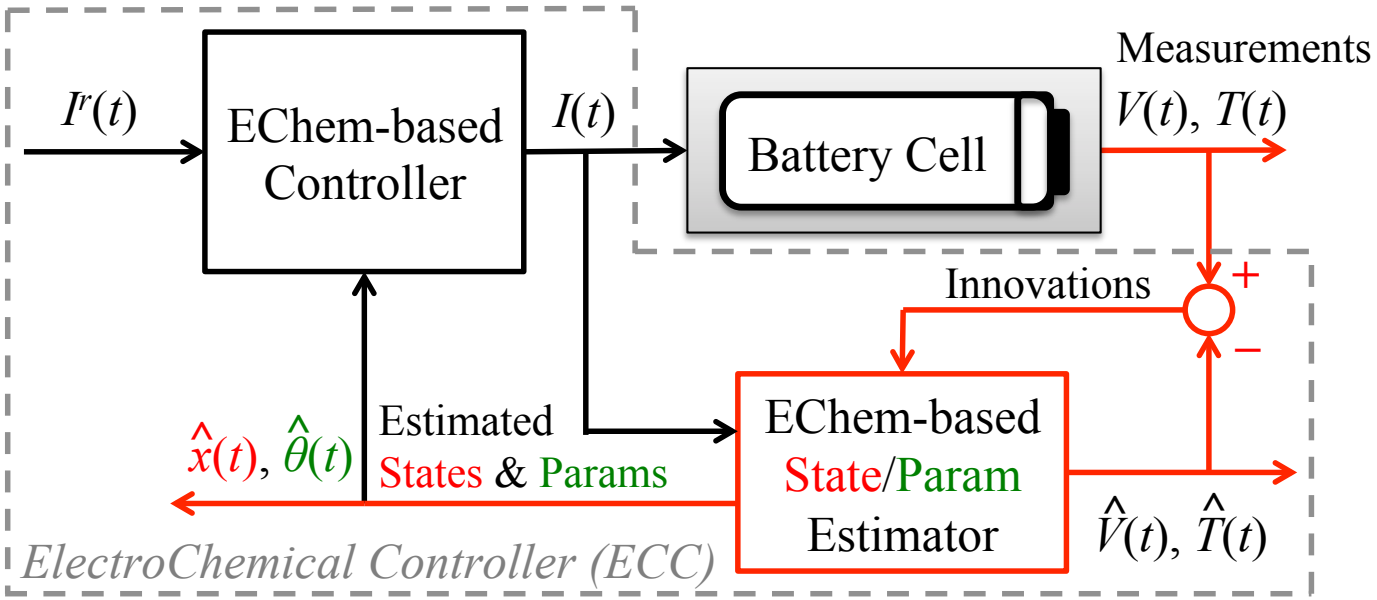
$$V(t) = h(c_{ss}^-(t), c_{ss}^+(t), I(t); \theta)$$




Definitions

- SOC: Bulk concentration $SOC_{bulk}$, Surface concentration $c_{ss}^-(t)$
- SOH: Physical parameters, e.g. $\varepsilon$, $q$, $n_{Li}$, $R_f$

# Adaptive SOC/SOH Problem




## Combined SOC/SOH Problem

Given measurements of current $I(t)$, voltage $V(t)$, and the SPM equations, simultaneously estimate the lithium concentration states $c_s^-(r,t), c_s^+(r,t)$ and parameters $\theta$.

# Causal Structure of SPM

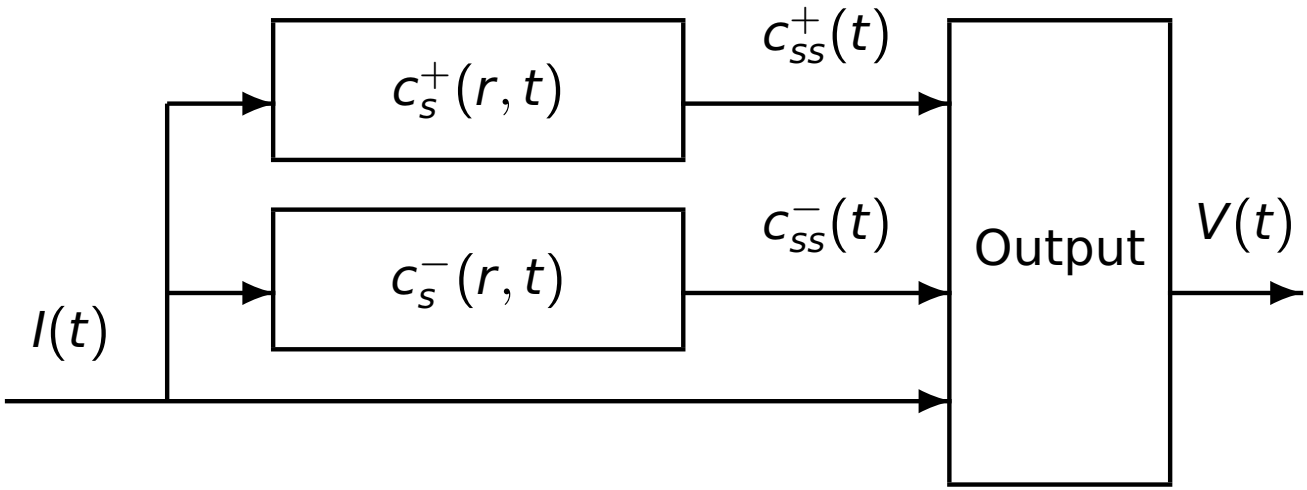



Figure: Block diagram of SPM. Note that the $c_s^+, c_s^-$ subsystems are independent of one another.

# Model Properties - I

$$\frac{\partial c_s^-}{\partial t}(r,t) = \frac{D_s^-}{r^2}\frac{\partial}{\partial r}\left[r^2\frac{\partial^2 c_s^-}{\partial r^2}(r,t)\right] \qquad \frac{\partial c_s^+}{\partial t}(r,t) = \frac{D_s^+}{r^2}\frac{\partial}{\partial r}\left[r^2\frac{\partial^2 c_s^+}{\partial r^2}(r,t)\right]$$

$$\frac{\partial c_s^-}{\partial r}(0,t) = 0 \qquad \frac{\partial c_s^+}{\partial r}(0,t) = 0$$

$$\frac{\partial c_s^-}{\partial r}(R_s^-,t) = -\rho^- I(t) \qquad \frac{\partial c_s^+}{\partial r}(R_s^+,t) = \rho^+ I(t)$$

## *Proposition 1: Marginal Stability*

Each PDE subsystem $(c_s^+(r,t), c_s^-(r,t))$ is marginally stable.
In particular, each PDE contains

- one e-value @ origin
- remaining e-values on negative real axis

# Model Properties - II

## *Proposition 2: Conservation of Lithium*

Moles of solid phase lithium are conserved. Mathematically, $\frac{d}{dt}(n_{Li}(t)) = 0$ where

$$n_{Li}(t) = \sum_{j \in \{+,-\}} \frac{\epsilon_s^j L^j A}{\frac{4}{3}\pi (R_s^j)^3} \int_0^{R_s^j} 4\pi r^2 c_s^j(r,t) dr$$

## *Remark 2: Initial Conditions and Moles of Lithium*

Consider ICs corresponding to steady-state and $I(t) = 0$, then the ICs $c_{s,0}^+, c_{s,0}^-$, moles of lithium $n_{Li}$, and initial voltage $V_0$ verify:

$$\begin{aligned} n_{Li} &= \varepsilon_s^+ L^+ c_{s,0}^+ + \varepsilon_s^- L^- c_{s,0}^-, \\ V_0 &= U^+(c_{s,0}^+) - U^-(c_{s,0}^-) \end{aligned}$$

# Invertability Analysis

## Objective

Study invertability of output function $V(t) = h(c_{ss}^+, c_{ss}^-, I)$ w.r.t. $c_{ss}^+$ and $c_{ss}^-$.

$$V(t) = \frac{RT}{\alpha F}\sinh^{-1}\left(\frac{-I(t)}{2a^+AL^+i_0^+(c_{ss}^+)}\right) - \frac{RT}{\alpha F}\sinh^{-1}\left(\frac{I(t)}{2a^-AL^+i_0^-(c_{ss}^-)}\right)$$
$$U^+(c_{ss}^+) - U^-(c_{ss}^-) - \left(\frac{R_f^+}{a^+L^+} + \frac{R_f^-}{a^-L^-}\right)I(t), \tag{1}$$

$$i_0^{\pm}(c_{ss}^{\pm}) = k^{\pm}\sqrt{c_e^0 c_{ss}^{\pm}(c_{s,\max}^{\pm} - c_{ss}^{\pm})} \tag{2}$$

Define:

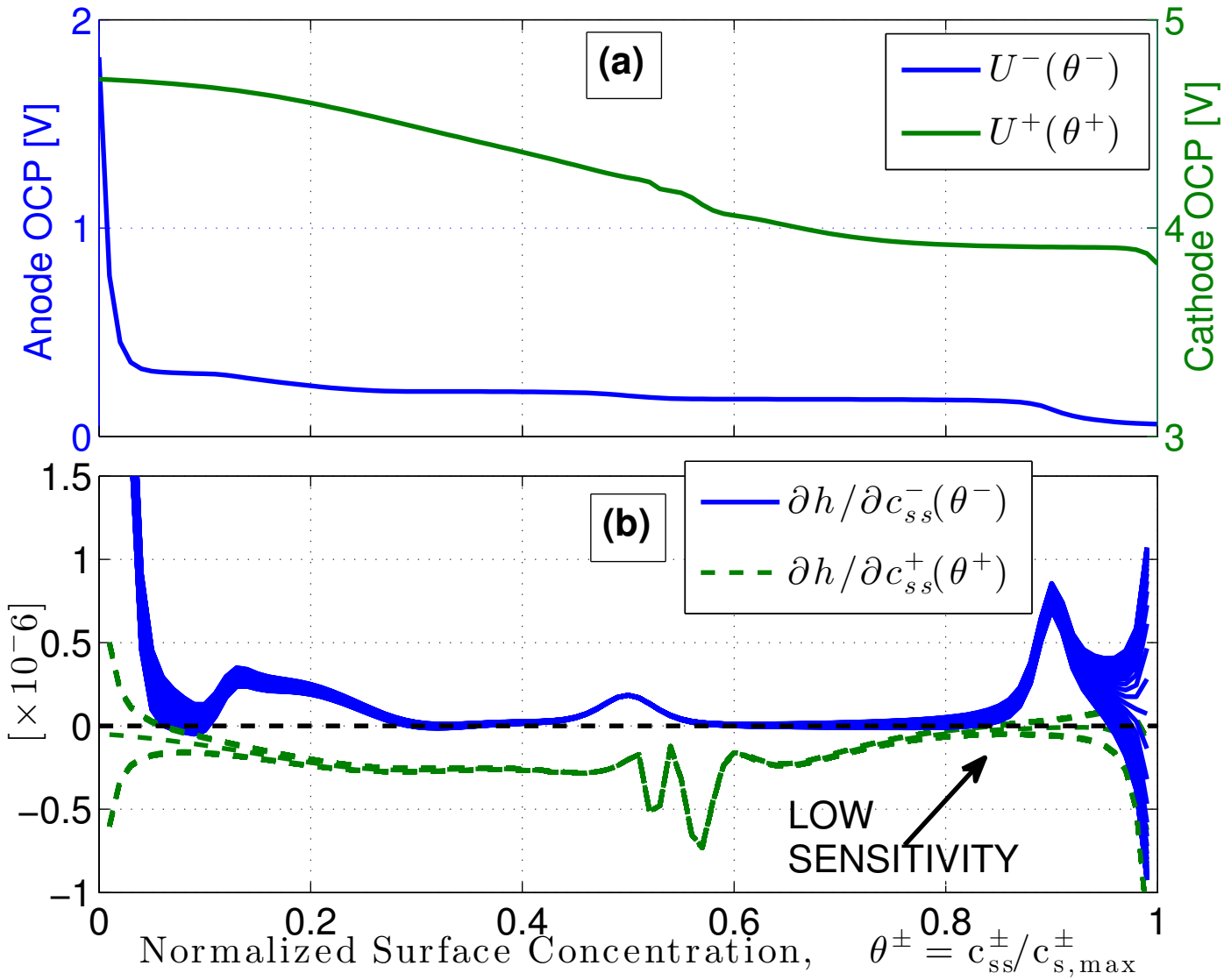
$$V(t) = h(c_{ss}^+, c_{ss}^-, I) \tag{3}$$

Compute:

$$\frac{\partial h}{\partial c_{ss}^+}(c_{ss}^+, c_{ss}^-, I) \quad AND \quad \frac{\partial h}{\partial c_{ss}^-}(c_{ss}^+, c_{ss}^-, I) \tag{4}$$

over a range of $SOC$ and $I$.

# OCPs and Output Function Sensitivities



# Nonlinear Parameter Identifiability

## Nonlinearly Parameterized Output

$$V(t) = h(c_{ss}^{+}(t), c_{ss}^{-}(t), I(t); \theta)$$

- $\theta$ contains many parameters
- Linear dependence between parameters?

# Nonlinear Parameter Identifiability

## Nonlinearly Parameterized Output

$$V(t) = h(c_{ss}^{+}(t), c_{ss}^{-}(t), I(t); \theta)$$

- $\theta$ contains many parameters
- Linear dependence between parameters?

## Identifiability Analysis Result

- Linearly independent parameter subset : $\theta_h = [n_{Li}, R_f]^T$
  - $n_{Li}$ : Total amount of cyclable Li (Capacity Fade)
  - $R_f$ : Resistance of current collectors, electrolyte, etc. (Power Fade)

# Nonlinear Parameter Identifiability

## Nonlinearly Parameterized Output

$$V(t) = h(c_{ss}^{+}(t), c_{ss}^{-}(t), I(t); \theta)$$

- $\theta$ contains many parameters
- Linear dependence between parameters?

## Identifiability Analysis Result

- Linearly independent parameter subset : $\theta_h = [n_{Li}, R_f]^T$
  - $n_{Li}$ : Total amount of cyclable Li (Capacity Fade)
  - $R_f$ : Resistance of current collectors, electrolyte, etc. (Power Fade)

Enables the application of nonlinear least squares parameter identification tools applied to vector $\theta_h$

# Nonlinear Identifiability Analysis

## Parameterized Output

$$V(t) = h(c_{ss}^{+}(t), c_{ss}^{-}(t), I(t); \theta)$$

$$\theta = \left[ n_{Li}, \frac{1}{a^{+} A L^{+} k^{+} \sqrt{c_e^0}}, \frac{1}{a^{-} A L^{-} k^{-} \sqrt{c_e^0}}, R_f \right]^T$$

- Linear dependence between parameters?

## Parameter Sensitivity

$$S = \frac{\partial h}{\partial \theta} \qquad S \in R^{n_T \times 4}$$

$$S = [S_1, S_2, S_3, S_4]^T$$

- A particular decomposition of $S^T S$ reveals linear dependence between parameters!

# Nonlinear Identifiability Analysis

## Decomposition of $S^TS = D^TCD$

$$D = \mathrm{diag}(\|S_1\|, \|S_2\|, \|S_3\|, \|S_4\|)$$

$$C = \begin{bmatrix} 1 & \frac{\langle S_1,S_2\rangle}{\|S_1\|\|S_2\|} & \frac{\langle S_1,S_3\rangle}{\|S_1\|\|S_3\|} & \frac{\langle S_1,S_4\rangle}{\|S_1\|\|S_4\|} \\ \frac{\langle S_2,S_1\rangle}{\|S_2\|\|S_1\|} & 1 & \frac{\langle S_2,S_3\rangle}{\|S_2\|\|S_3\|} & \frac{\langle S_2,S_4\rangle}{\|S_2\|\|S_4\|} \\ \frac{\langle S_3,S_1\rangle}{\|S_3\|\|S_1\|} & \frac{\langle S_3,S_2\rangle}{\|S_3\|\|S_2\|} & 1 & \frac{\langle S_3,S_4\rangle}{\|S_3\|\|S_4\|} \\ \frac{\langle S_4,S_1\rangle}{\|S_4\|\|S_1\|} & \frac{\langle S_4,S_2\rangle}{\|S_4\|\|S_2\|} & \frac{\langle S_4,S_3\rangle}{\|S_4\|\|S_3\|} & 1 \end{bmatrix}$$

- $\frac{|\langle S_i,S_j\rangle|}{\|S_i\|\|S_j\|} \approx 1 \Rightarrow$ linear dependence
- $\frac{|\langle S_i,S_j\rangle|}{\|S_i\|\|S_j\|} \approx 0 \Rightarrow$ linear independence

# Nonlinear Identifiability Analysis

## Decomposition of $S^TS = D^TCD$

- $\frac{|\langle S_i, S_j \rangle|}{\|S_i\| \|S_j\|} \approx 1 \Rightarrow$ linear dependence
- $\frac{|\langle S_i, S_j \rangle|}{\|S_i\| \|S_j\|} \approx 0 \Rightarrow$ linear independence

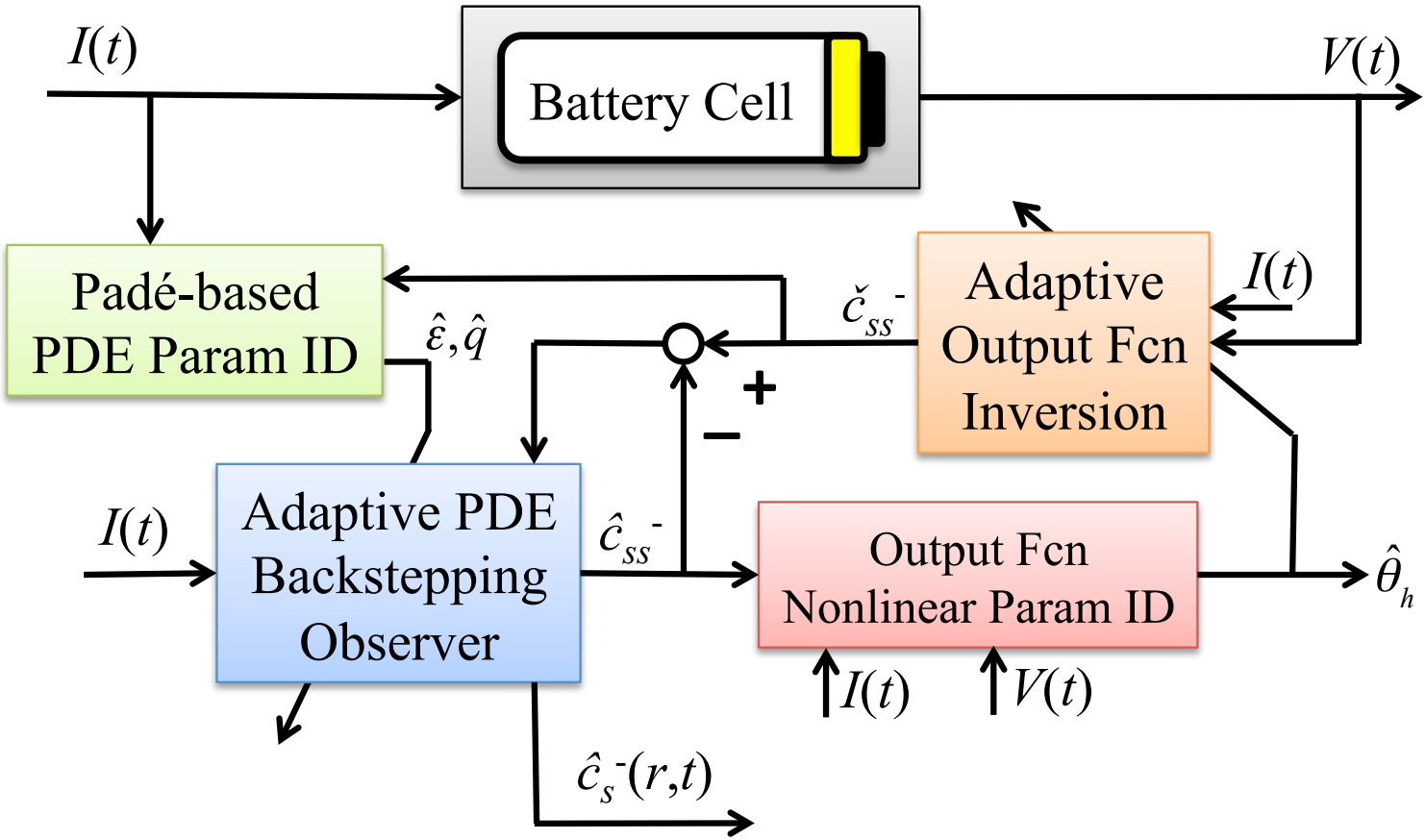
## Example: UDDS Drive Cycle Applied to Battery Model

$$C = \begin{bmatrix} 1 & -0.3000 & 0.2908 & 0.2956 \\ -0.3000 & 1 & -0.9801 & -0.9805 \\ 0.2908 & -0.9801 & 1 & 0.9322 \\ 0.2956 & -0.9805 & 0.9322 & 1 \end{bmatrix}$$

- $\theta_2, \theta_3, \theta_4$ are linearly dependent
- Identify the subset $\theta_h = [\theta_1, \theta_4]^T$ via nonlinear least squares
  - $\theta_1 = n_{Li}$ : Capacity Fade
  - $\theta_4 = R_f$ : Power Fade

# Adaptive Observer

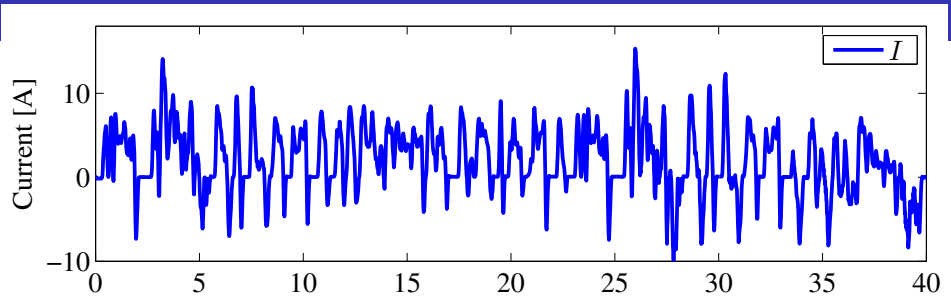
## Combined State & Parameter Estimation




S. J. Moura, N. A. Chaturvedi, M. Krstic, "Adaptive PDE Observer for Battery SOC/SOH Estimation via an Electrochemical Model," *ASME Journal of Dynamic Systems, Measurement, and Control*, v 136, n 1, pp. 011015-011026, Oct 2013.

# Adaptive Observer Simulations

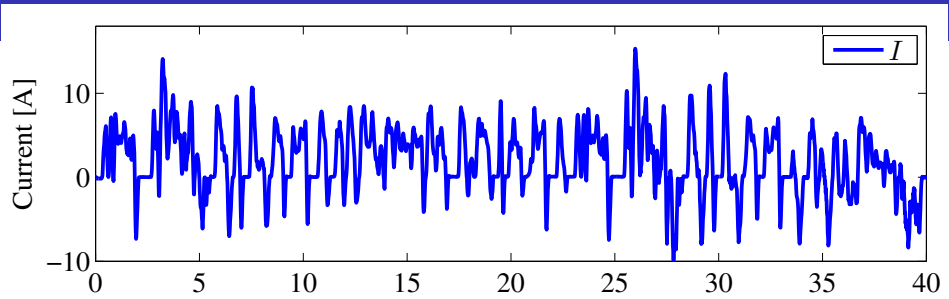
## UDDS Drive Cycle Input

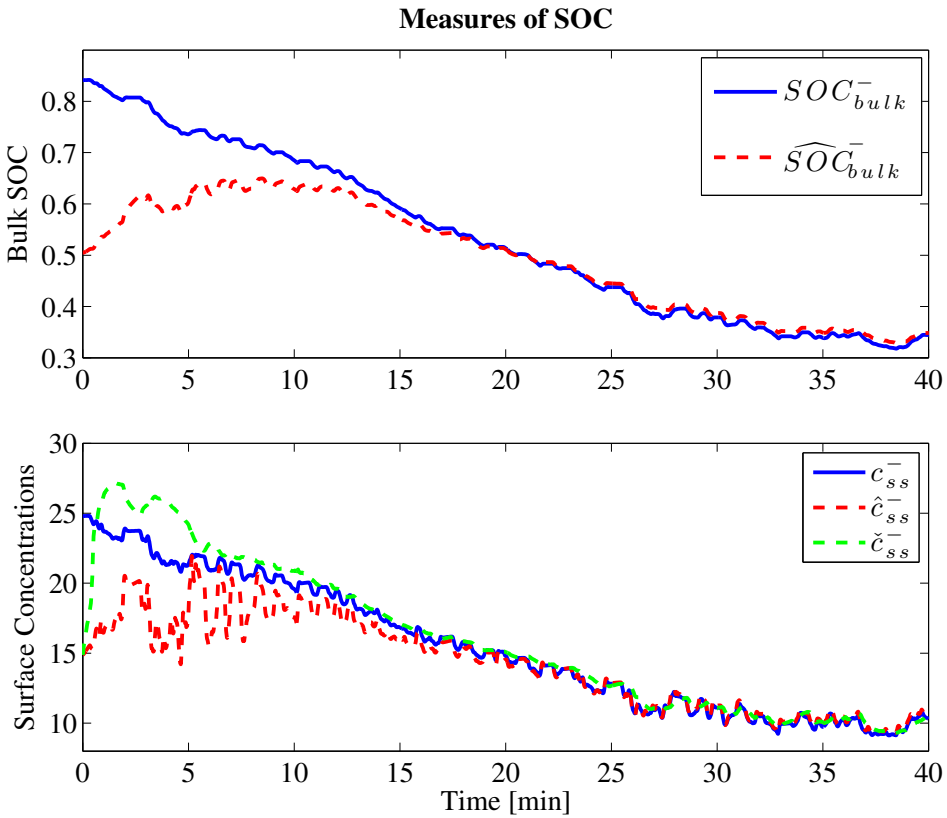



S. J. Moura, N. A. Chaturvedi, M. Krstic, "Adaptive PDE Observer for Battery SOC/SOH Estimation via an Electrochemical Model," *ASME Journal of Dynamic Systems, Measurement, and Control*, v 136, n 1, pp. 011015-011026, Oct 2013.

# Adaptive Observer Simulations

## UDDS Drive Cycle Input

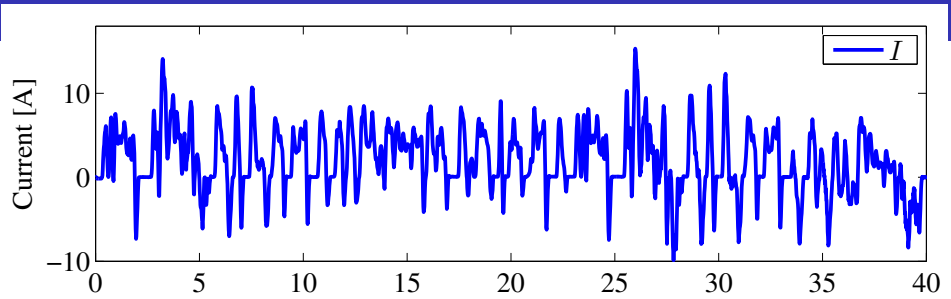


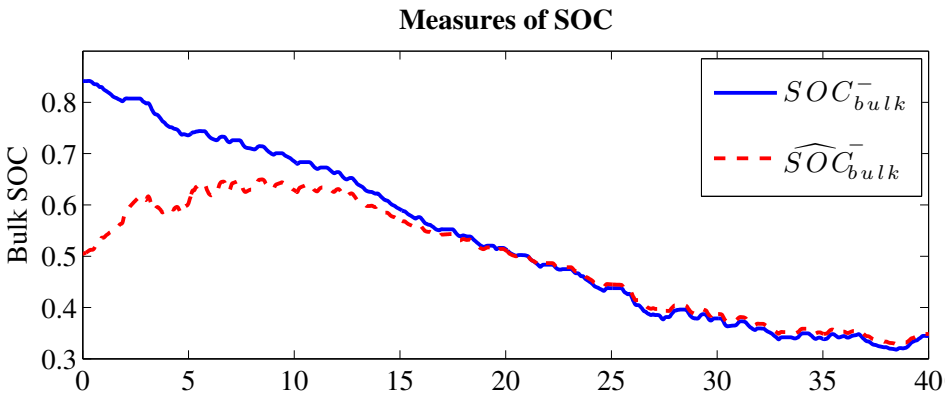



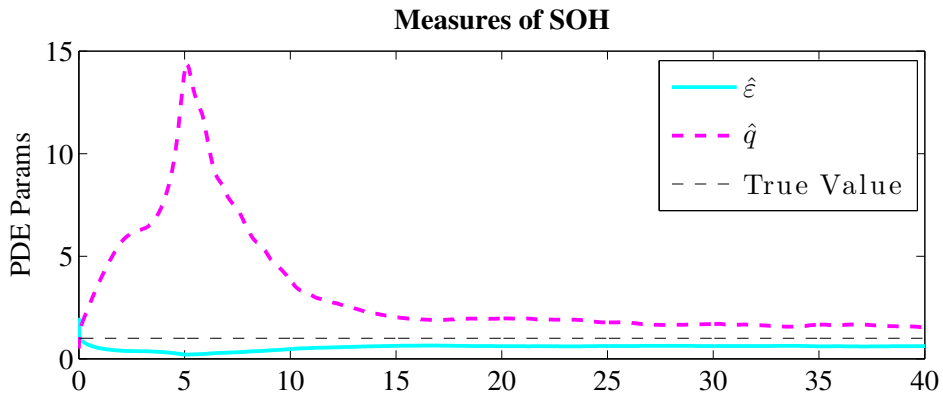

S. J. Moura, N. A. Chaturvedi, M. Krstic, "Adaptive PDE Observer for Battery SOC/SOH Estimation via an Electrochemical Model," *ASME Journal of Dynamic Systems, Measurement, and Control*, v 136, n 1, pp. 011015-011026, Oct 2013.

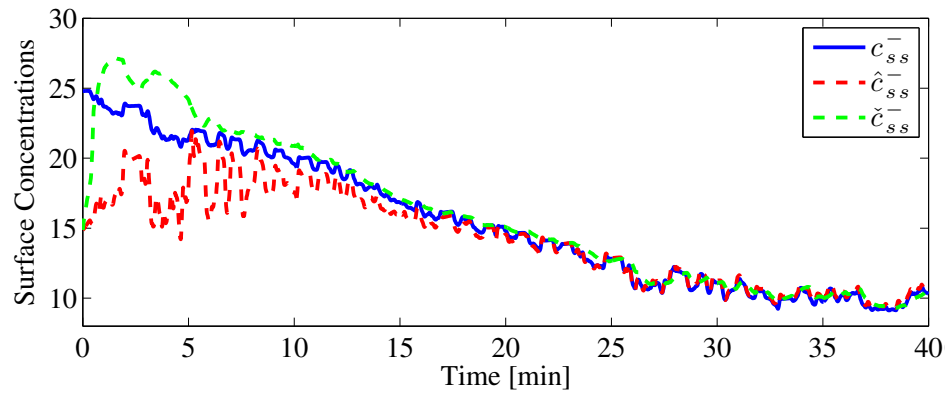
# Adaptive Observer Simulations

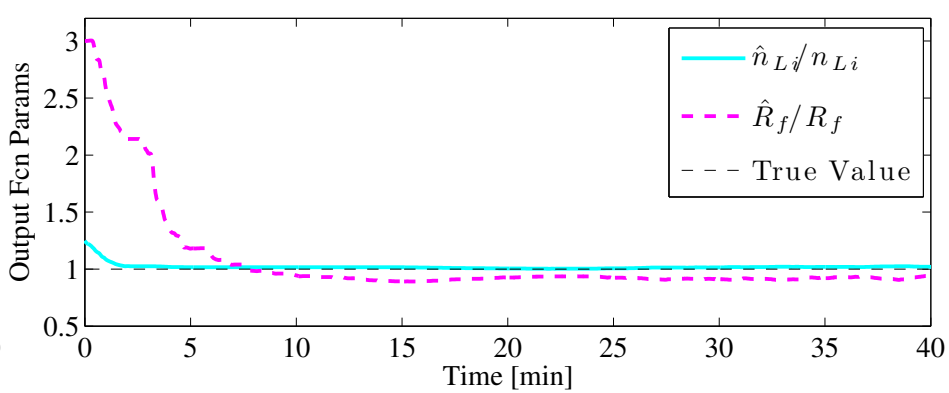
## UDDS Drive Cycle Input




S. J. Moura, N. A. Chaturvedi, M. Krstic, "Adaptive PDE Observer for Battery SOC/SOH Estimation via an Electrochemical Model," *ASME Journal of Dynamic Systems, Measurement, and Control*, v 136, n 1, pp. 011015-011026, Oct 2013.

# Outline


1 BACKGROUND & BATTERY ELECTROCHEMISTRY FUNDAMENTALS

2 ESTIMATION AND CONTROL PROBLEM STATEMENTS

3 ELECTROCHEMICAL MODEL

4 STATE & PARAMETER ESTIMATION

5 CONSTRAINED OPTIMAL CONTROL

6 SUMMARY AND OPPORTUNITIES

# Operate Batteries at their Physical Limits



# Operate Batteries at their Physical Limits

## Existing Literature

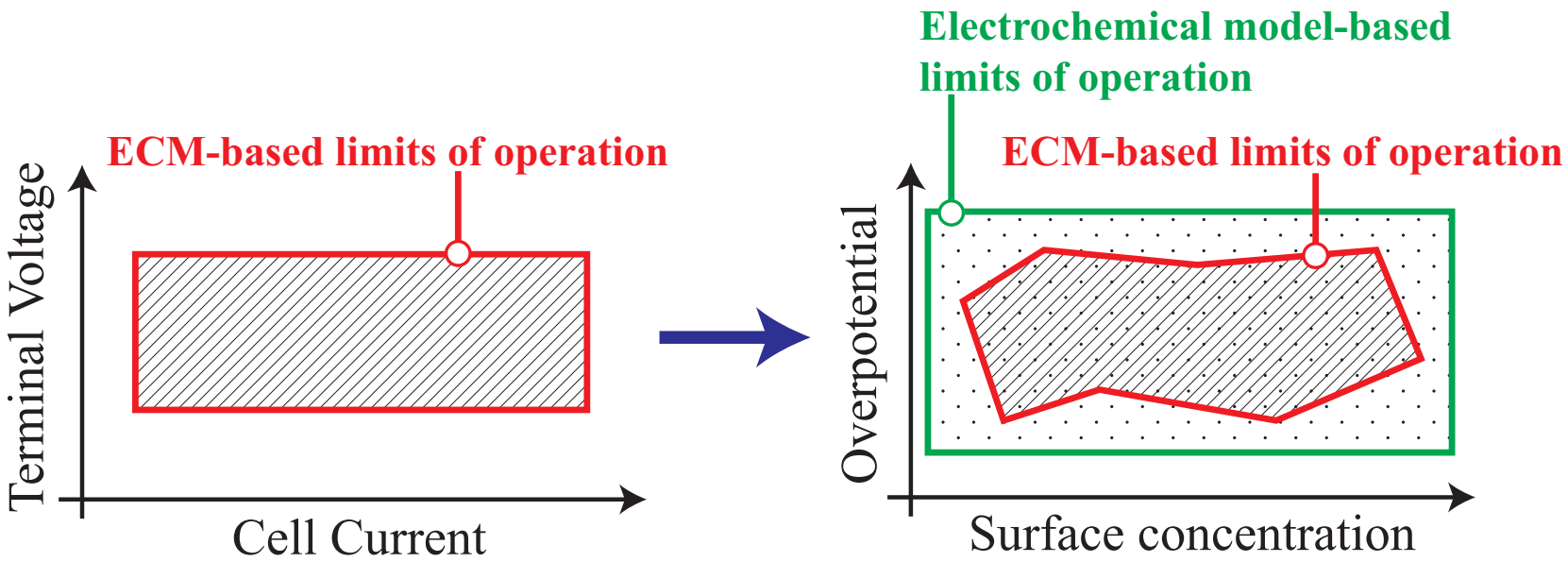
### Heuristic Protocols

- Survey of protocols [25]
- Multi-stage CC plus CV (MCC-CV) [Ansean et al, 2013]
- Boost charging (CV-CC-CV) [Notten et al, 2005]
- CC-CV with negative pulse (CC-CV-NP) [Monem et al., 2015]

### Model-based

- Piecewise constant time discretization [Methekar et al, 2010]
- One step model predictive control [Klein et al, 2010]
- Linear quadratic formulations [Parvini et al, 2015]
- Linearized input-output models [Torchio et al, 2015]
- State independent electrical parameters [Abdollahi et al, 2015]
- Reference governors [Perez et al, 2015]

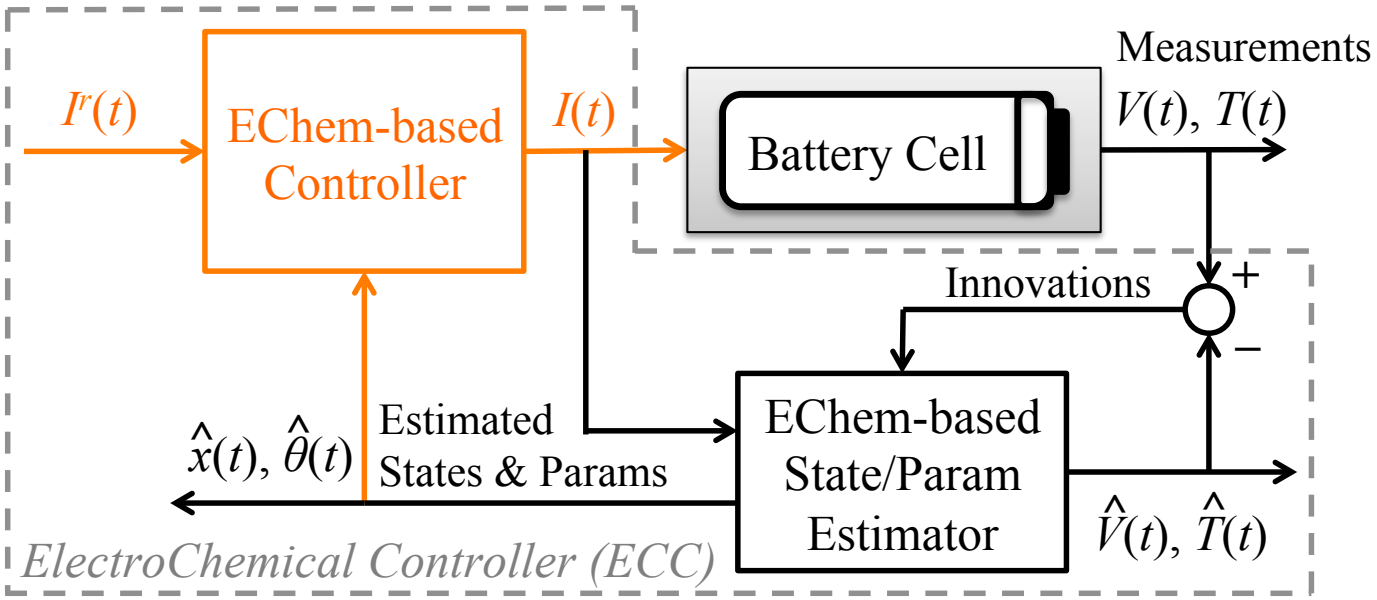
# Operate Batteries at their Physical Limits




## Problem Statement

Given accurate electrochemical state/parameter estimates $(\hat{x}, \hat{\theta})$, govern the input current $I(t)$ such that the EChem constraints are enforced.

# Operate Batteries at their Physical Limits




## Problem Statement

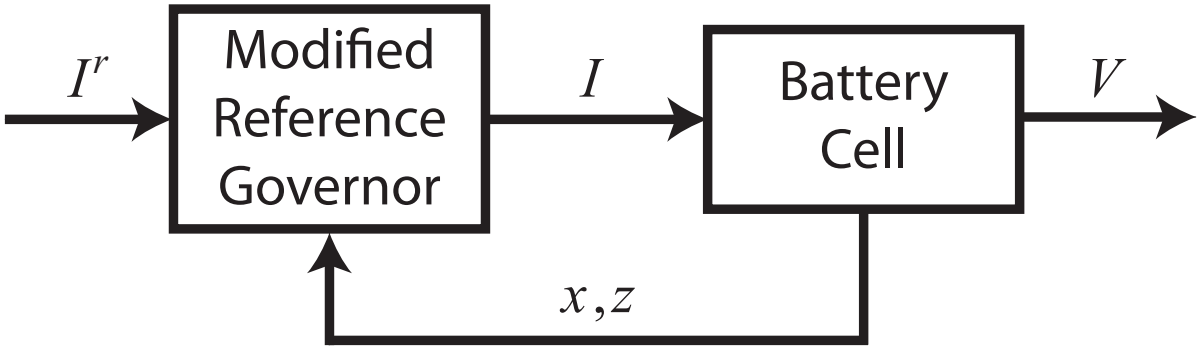
Given accurate electrochemical state/parameter estimates $(\hat{x}, \hat{\theta})$, govern the input current $I(t)$ such that the EChem constraints are enforced.

# Constraints

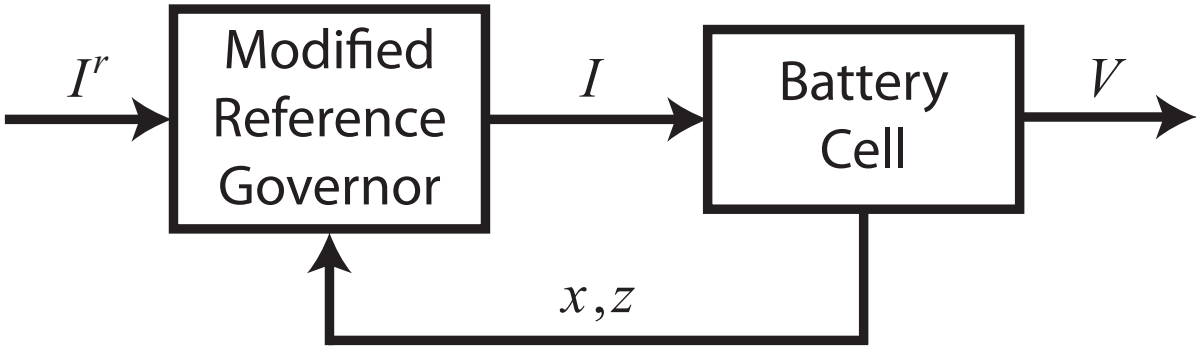
| Variable | Definition | Constraint |
|---|---|---|
| $I(t)$ | Current | Power electronics limits |
| $c_s^{\pm}(x,r,t)$ | Li concentration in solid | Saturation/depletion |
| $\frac{\partial c_s^{\pm}}{\partial r}(x,r,t)$ | Li concentration gradient | Diffusion-induced stress |
| $c_e(x,t)$ | Li concentration in electrolyte | Saturation/depletion |
| $T(t)$ | Temperature | High/low temps accel. aging |
| $\eta_s(x,t)$ | Side-rxn overpotential | Li plating, dendrite formation |

Each variable, $y$, must satisfy $y_{\min} \leq y \leq y_{\max}$.

# Modified Reference Governor (MRG)



# Modified Reference Governor (MRG)

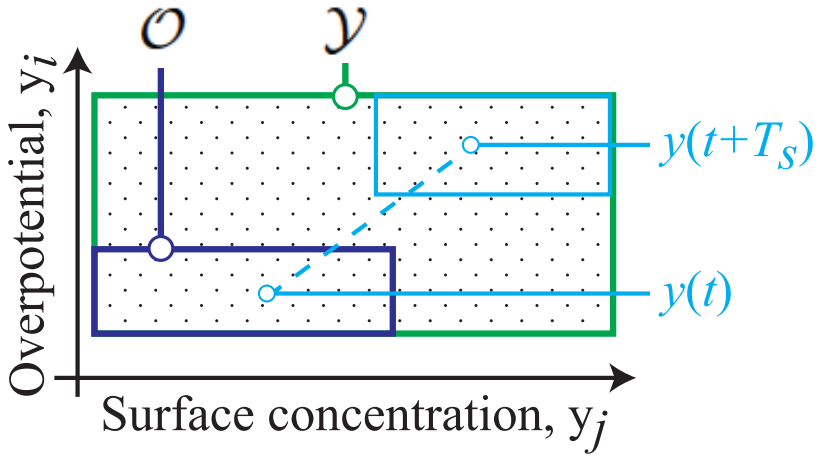



## MRG Equations

$$I[k+1] = \beta^*[k] I^r[k], \qquad \beta^* \in [0,1],$$

$$\beta^*[k] = \max\{\beta \in [0,1] : (x(t), z(t)) \in \mathcal{O}\}$$

# Modified Reference Governor (MRG)




## MRG Equations

$$I[k+1] = \beta^*[k] I^r[k], \qquad \beta^* \in [0,1],$$

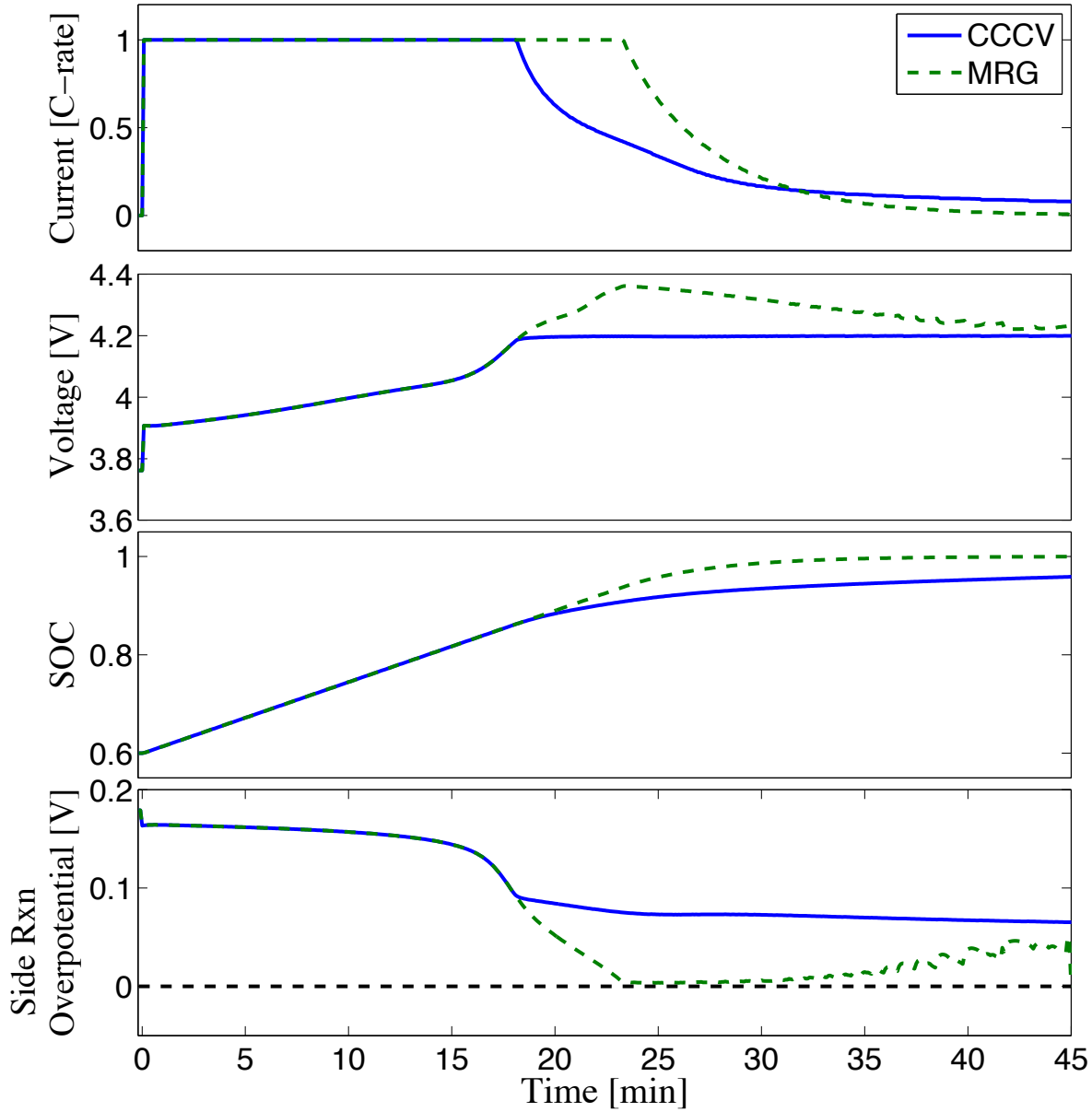
$$\beta^*[k] = \max\{\beta \in [0,1] : (x(t), z(t)) \in \mathcal{O}\}$$

## Def'n: Admissible Set $\mathcal{O}$

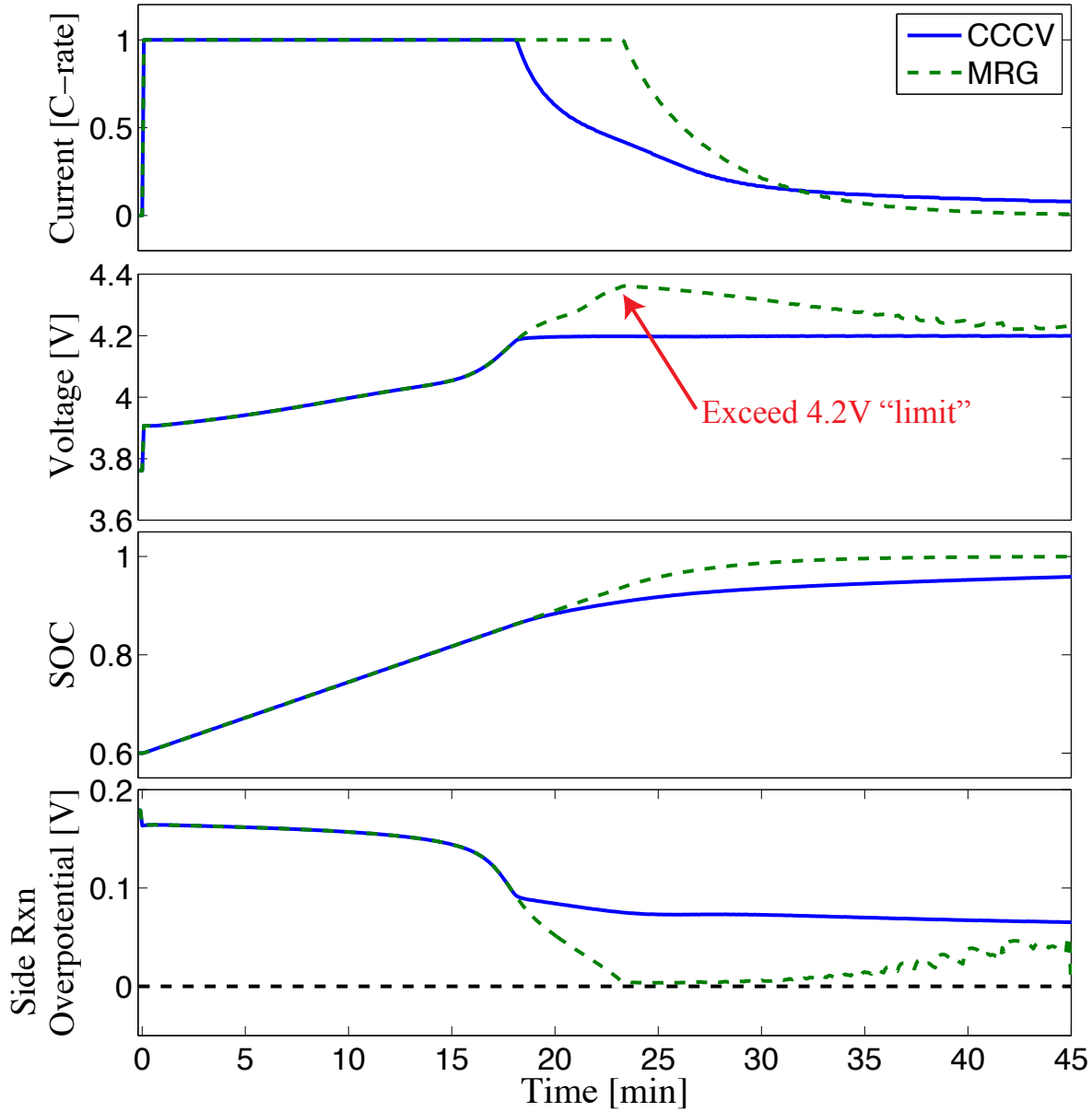
$$\mathcal{O} = \{(x(t), z(t)) : y(\tau) \in \mathcal{Y}, \forall \tau \in [t, t+T_s]\}$$

$$\begin{aligned} \dot{x}(t) &= f(x(t), z(t), \beta I^r) \\ 0 &= g(x(t), z(t), \beta I^r) \\ y(t) &= C_1 x(t) + C_2 z(t) + D \cdot \beta I^r + E \end{aligned}$$

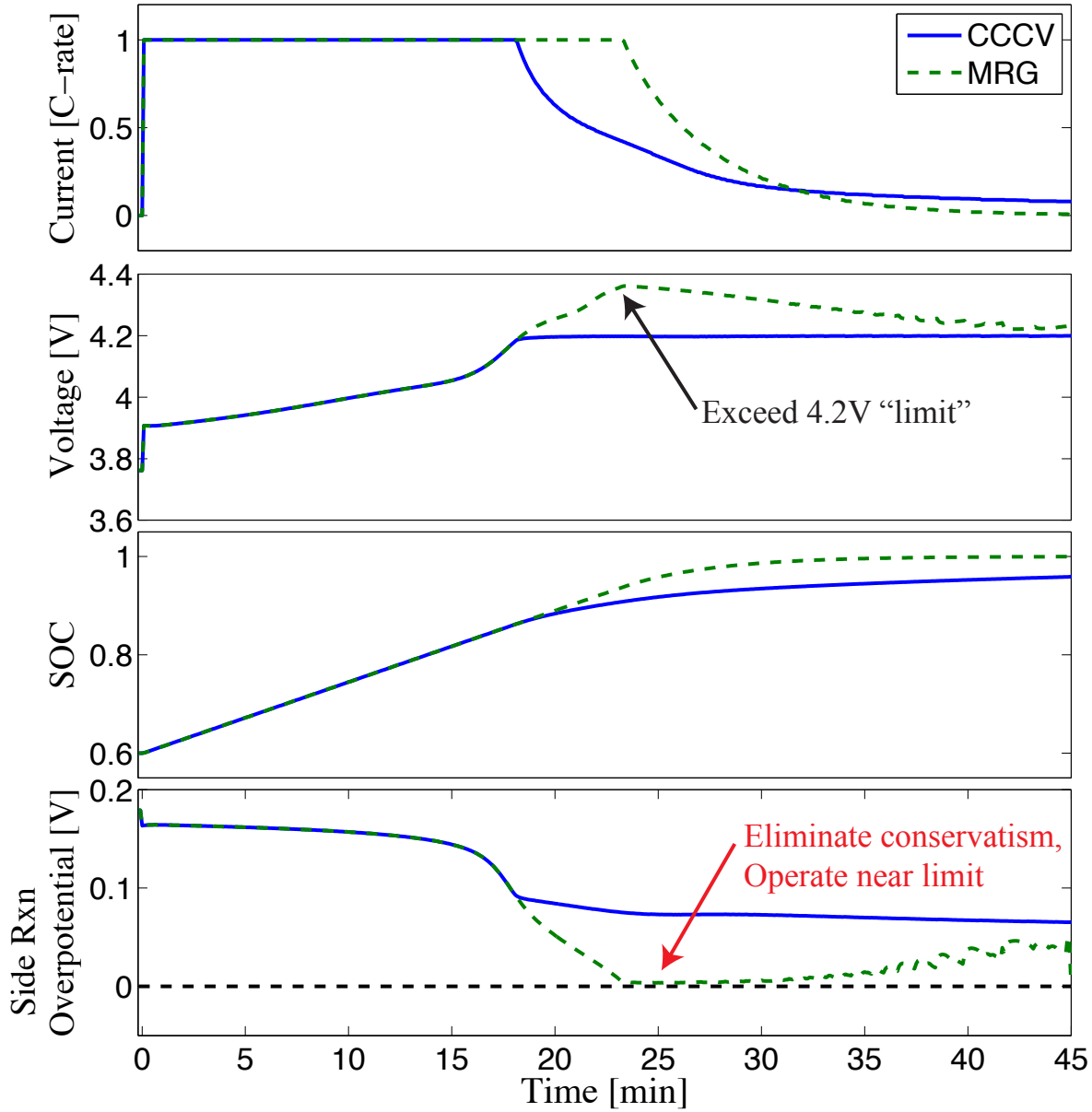
# Application to Charging



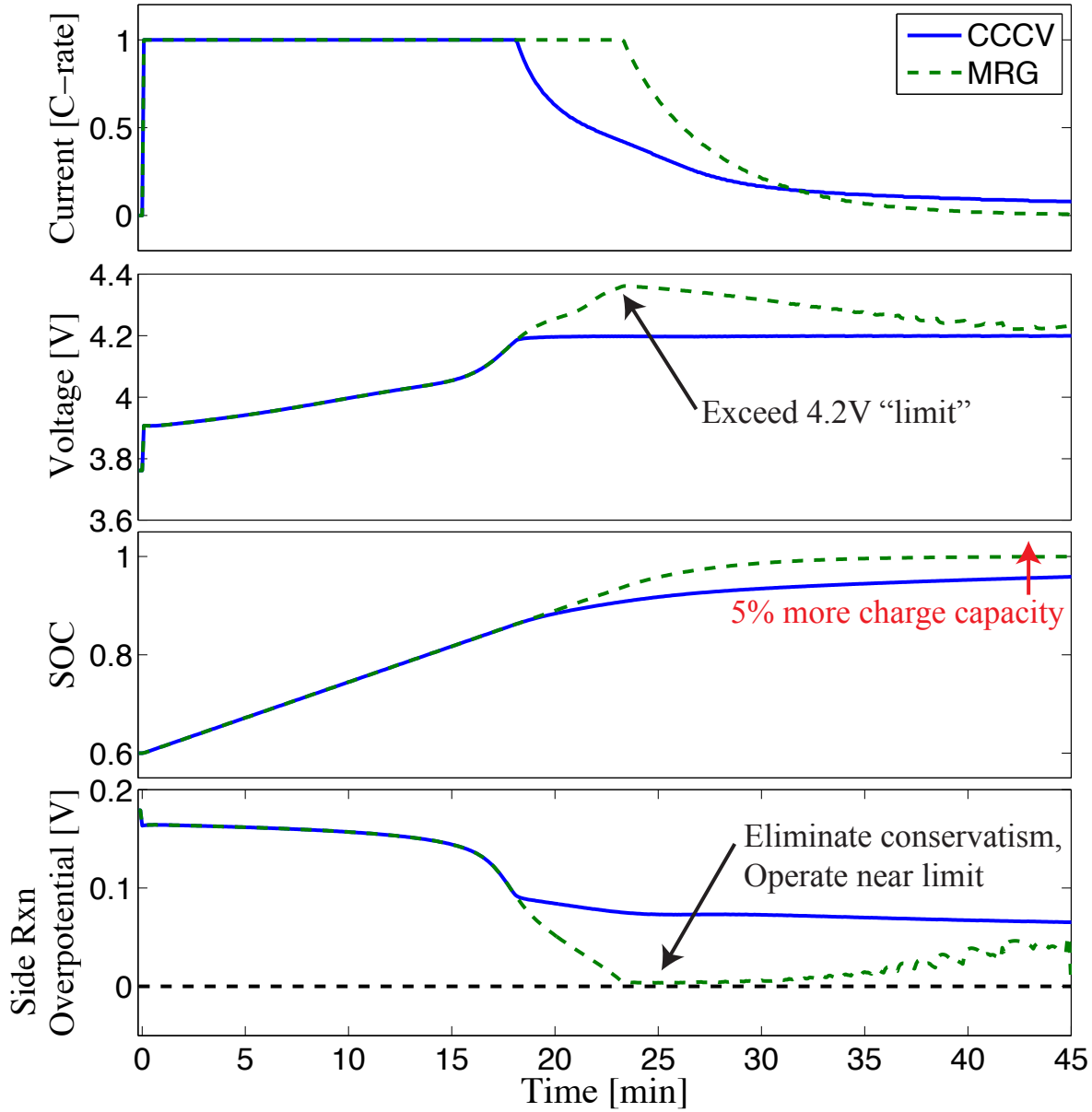
# Application to Charging



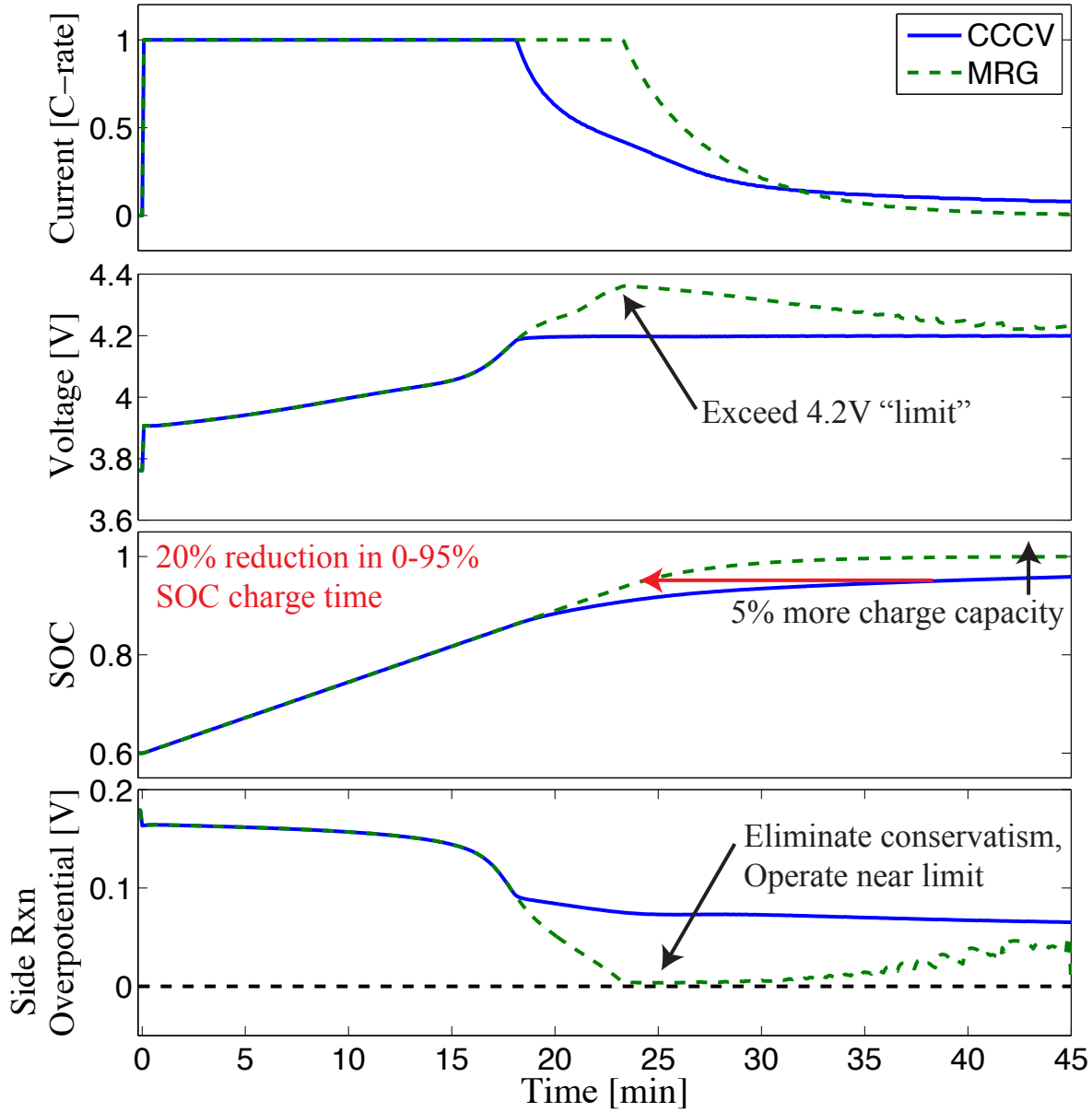
# Application to Charging



# Application to Charging



# Application to Charging



# Fast charge your EV while getting coffee

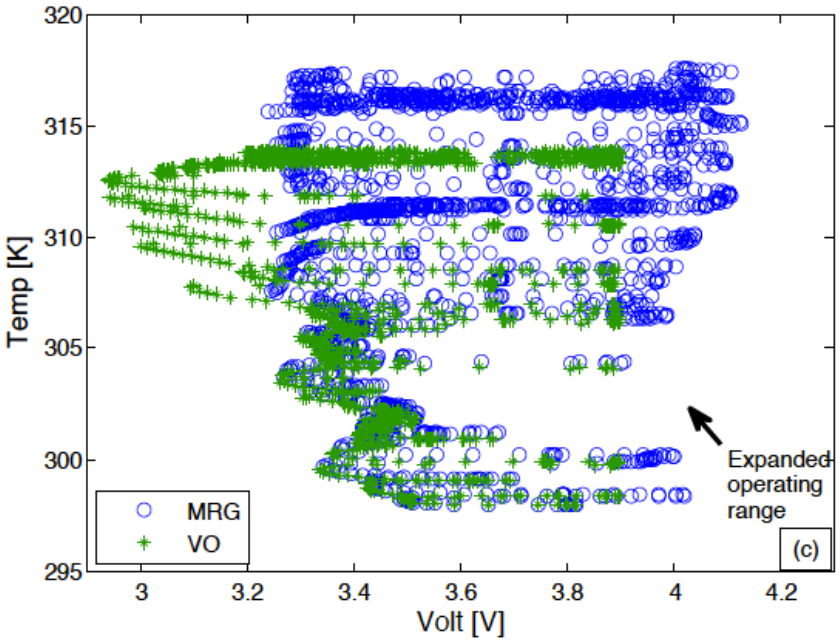
Table: Simulated fast charge times for various C-rates

| **Charge range** | **0.7C** \| Traditional | **1.8C** \| ECC | **2.5C** \| ECC |
|---|---|---|---|
| 0-10% | 7.92 min | 3.17 min | 2.33 min |
| 0-20% | 17.83 min | 7.00 min | 5.08 min |
| 0-50% | 47.33 min | 18.42 min | 20.50 min |

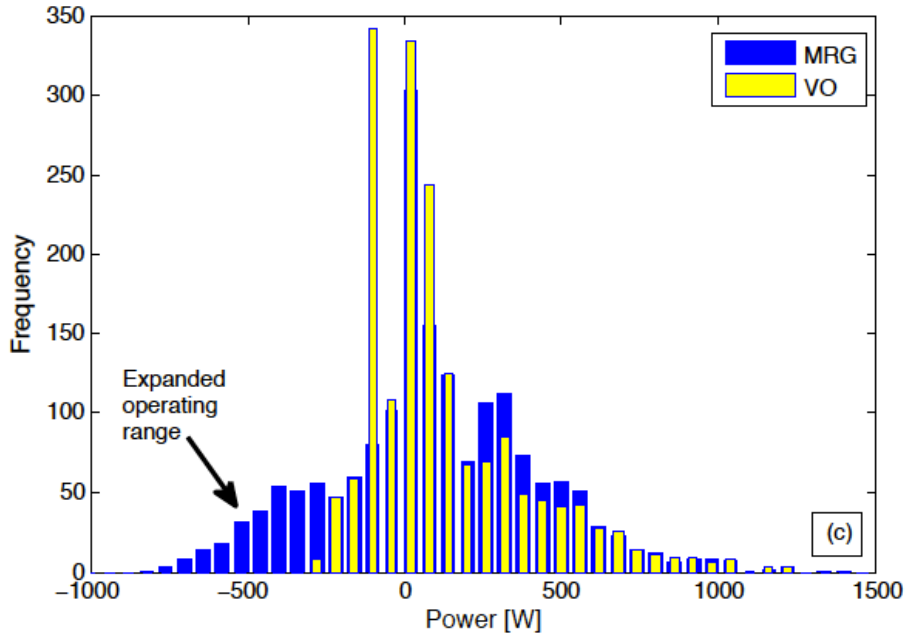
H. E. Perez, N. Shahmohammadhamedani, S. J. Moura, “Enhanced Performance of Li-ion Batteries via Modified Reference Governors & Electrochemical Models,” IEEE/ASME Transactions on Mechatronics, v 20, n 4, pp. 1511-1520, Aug 2015.

# Expanded Operating Range

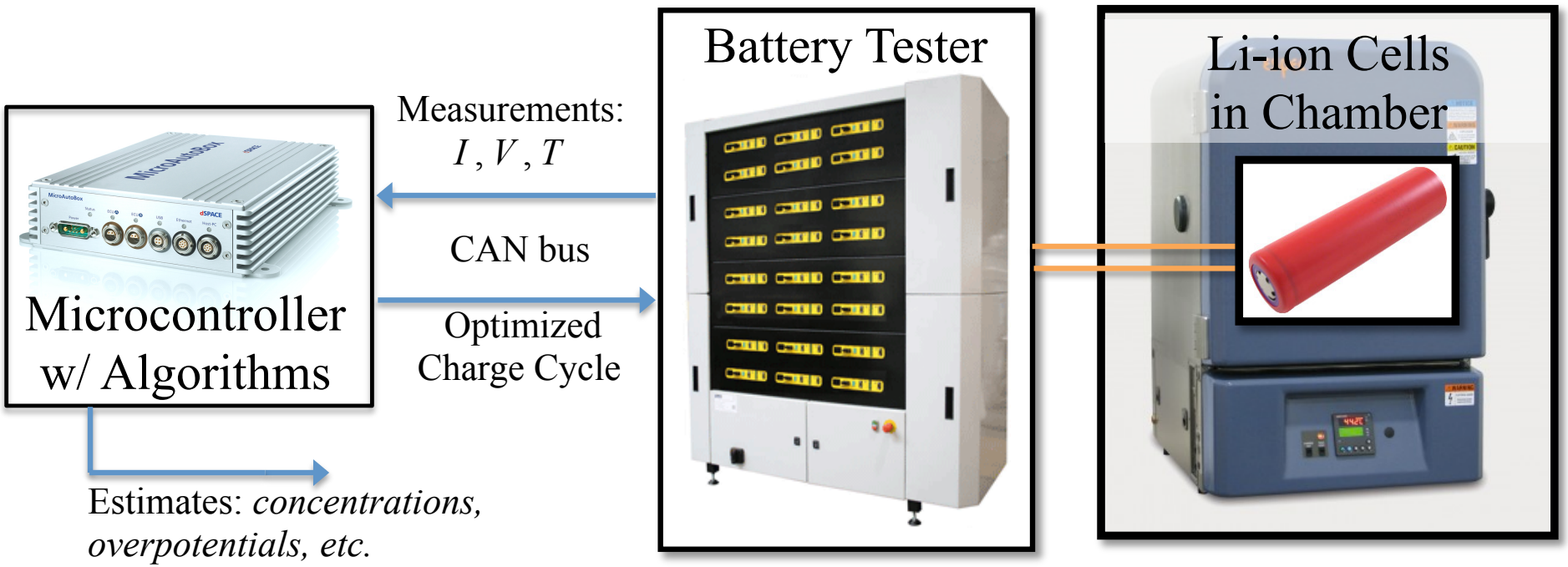
## Operating Points on Temperature-Voltage Plane



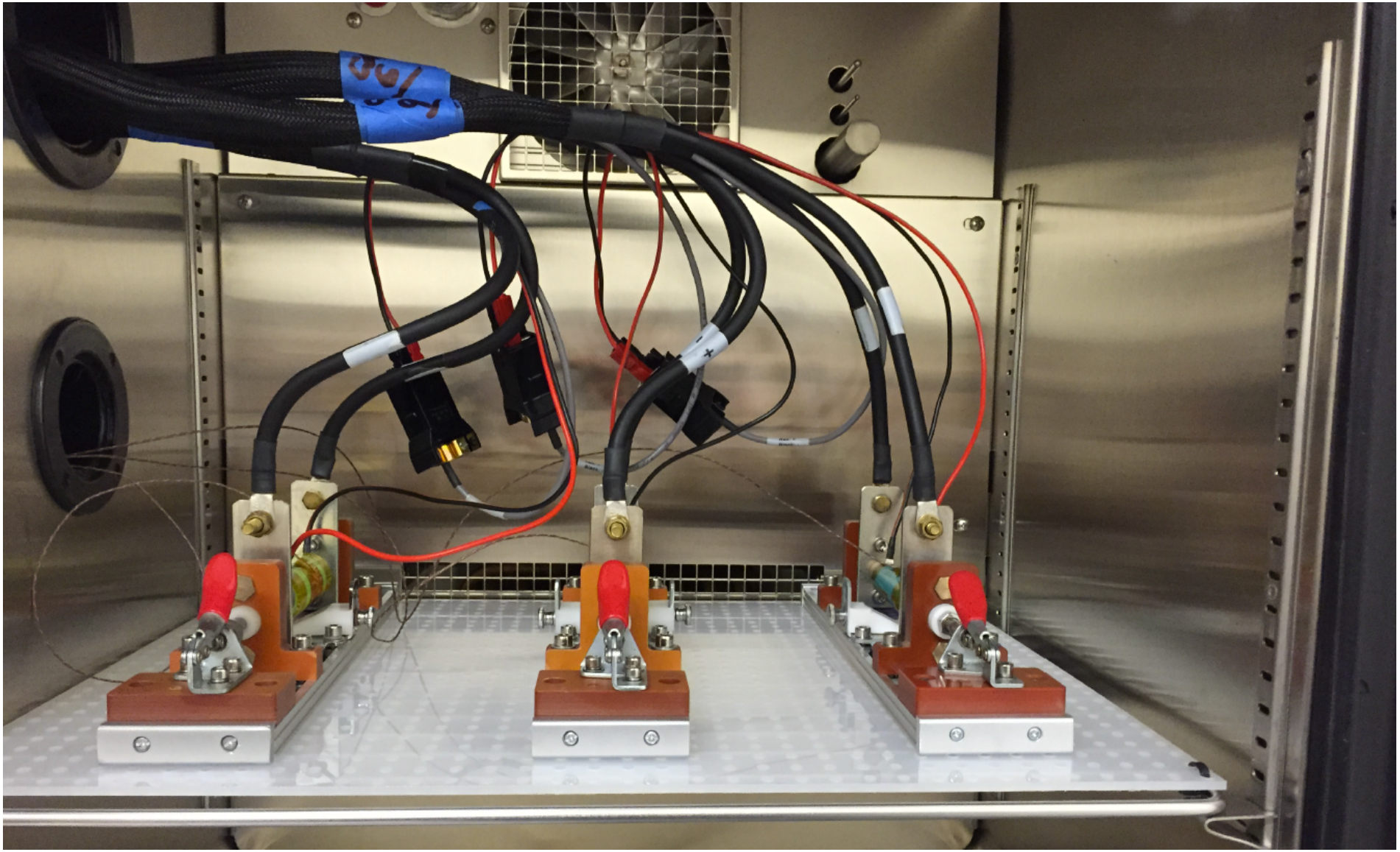

## Power Histogram



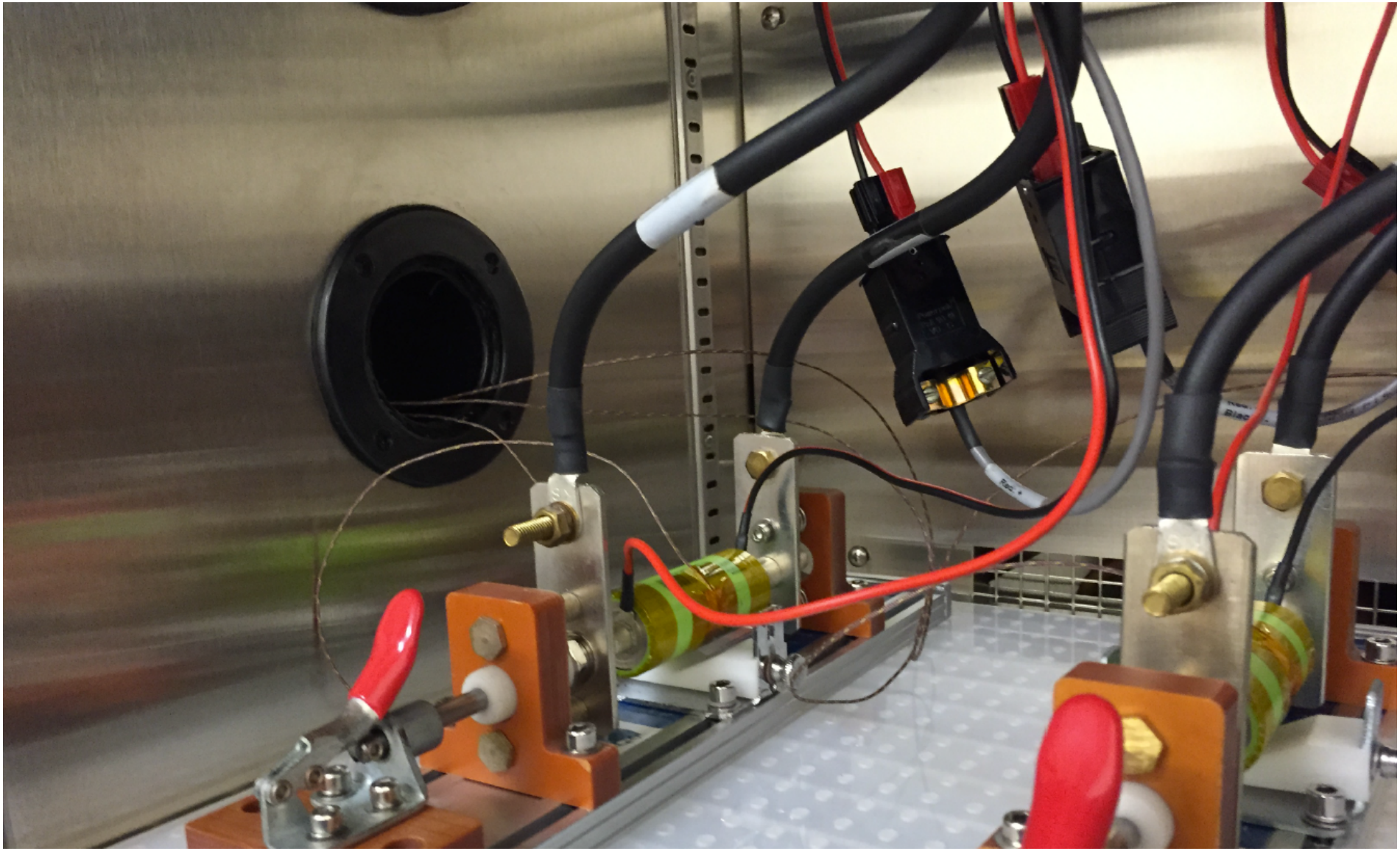
# Battery-in-the-Loop Test Facility



# Battery-in-the-Loop Test Facility



# Battery-in-the-Loop Test Facility



# Outline


1. BACKGROUND & BATTERY ELECTROCHEMISTRY FUNDAMENTALS
2. ESTIMATION AND CONTROL PROBLEM STATEMENTS
3. ELECTROCHEMICAL MODEL
4. STATE & PARAMETER ESTIMATION
5. CONSTRAINED OPTIMAL CONTROL
6. SUMMARY AND OPPORTUNITIES

# Summary

- Background & Electrochemistry Fundamentals
- SOC Estimation, SOH Estimation, Charge/Discharge Control
- The DFN Electrochemical Model
- Combined SOC/SOH Estimation
- Charge/Discharge Control with MRGs and EChem Models

# Summary

- Background & Electrochemistry Fundamentals
- SOC Estimation, SOH Estimation, Charge/Discharge Control
- The DFN Electrochemical Model
- Combined SOC/SOH Estimation
- Charge/Discharge Control with MRGs and EChem Models

Applicable control theoretic tools:

- PDE Control
- State estimation
- System identification
- Nonlinear and adaptive systems
- Optimal & constrained control

# Reading Materials

- S. J. Moura and H. Perez, "Better Batteries through Electrochemistry and Controls," *ASME Dynamic Systems and Control Magazine*, v 2, n 2, pp. S15-S21, July 2014. (Invited Paper).
- N. A. Chaturvedi, R. Klein, J. Christensen, J. Ahmed, and A. Kojic, "Algorithms for advanced battery-management systems," *IEEE Control Systems Magazine*, vol. 30, no. 3, pp. 49-68, 2010.
- H. E. Perez, N. Shahmohammadhamedani, S. J. Moura, "Enhanced Performance of Li-ion Batteries via Modified Reference Governors & Electrochemical Models," *IEEE/ASME Transactions on Mechatronics*, v 20, n 4, pp. 1511-1520, Aug 2015.
- S. J. Moura, N. A. Chaturvedi, M. Krstic, "Adaptive PDE Observer for Battery SOC/SOH Estimation via an Electrochemical Model," *ASME Journal of Dynamic Systems, Measurement, and Control*, v 136, n 1, pp. 011015-011026, Oct 2013.
- H. Perez, S. J. Moura, "Sensitivity-Based Interval PDE Observer for Battery SOC Estimation," *2015 American Control Conference*, Chicago, IL, 2015. **Best Student Paper**.
- S. J. Moura, F. Bribiesca Argomedo, R. Klein, A. Mirtabatabaei, M. Krstic, "Battery State Estimation for a Single Particle Model with Electrolyte Dynamics."

# VISIT US!

# ありがとう

Energy, Controls, and Applications Lab (eCAL)

ecal.berkeley.edu

smoura@berkeley.edu



# Our Team at UC Berkeley



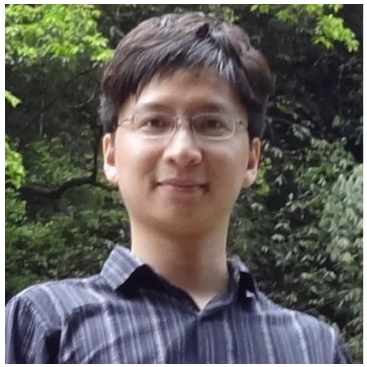
Dr. Satadru Dey



Hector Perez



Saehong Park



Dr. Xiaosong Hu



Caroline Le Floch



Eric Burger



Eric Munsing



Laurel Dunn

# APPENDIX SLIDES

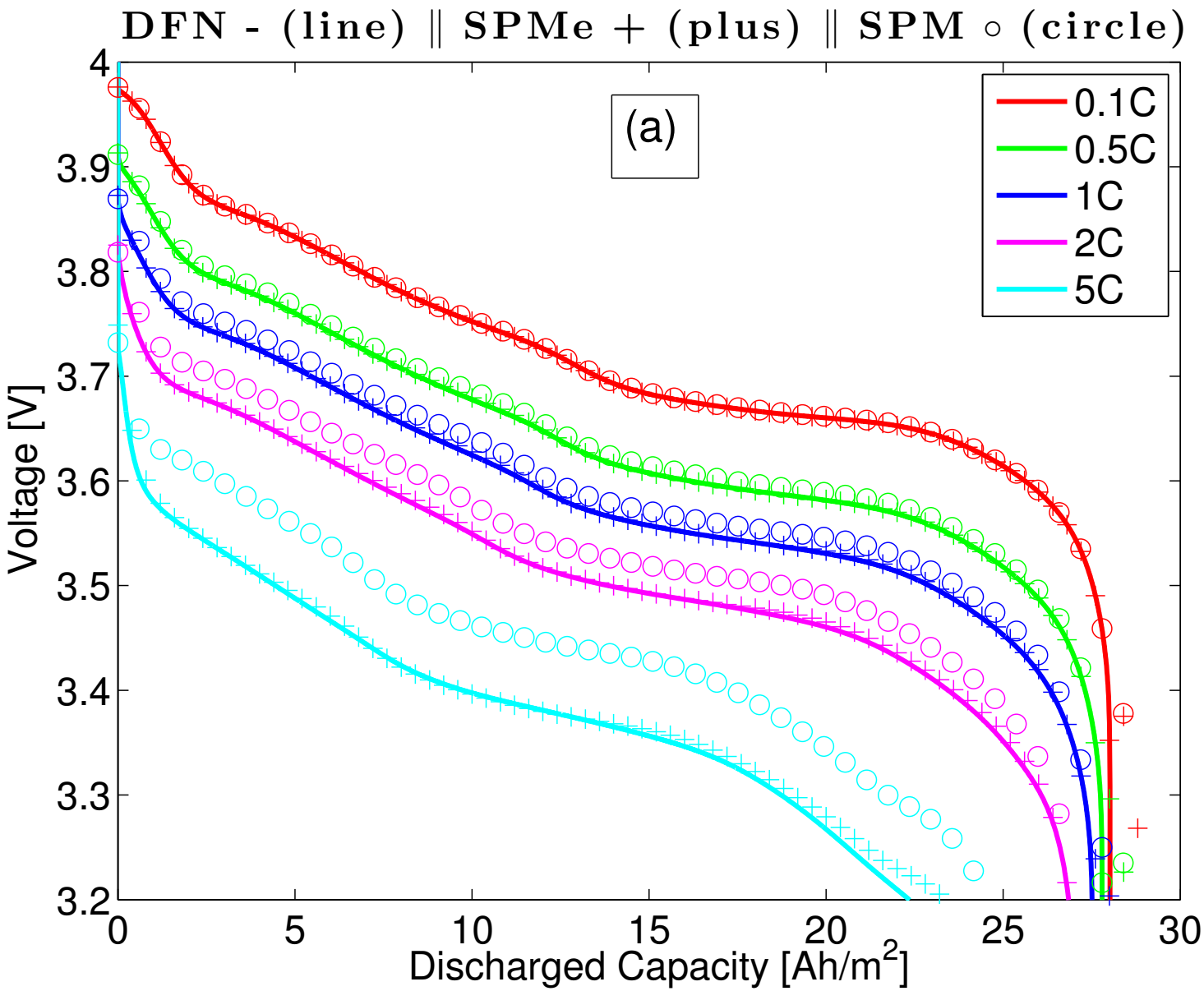
# Research Opportunities

- Fault Diagnostics (Detection, Isolation, Estimation)
- Coupled Electrochemical-Thermal-Mechanical dynamics
- Application to novel materials (LMBs, Silicon, Li-Air)
- Battery packs $\rightarrow$ heterogeneous cells (2nd life batts)

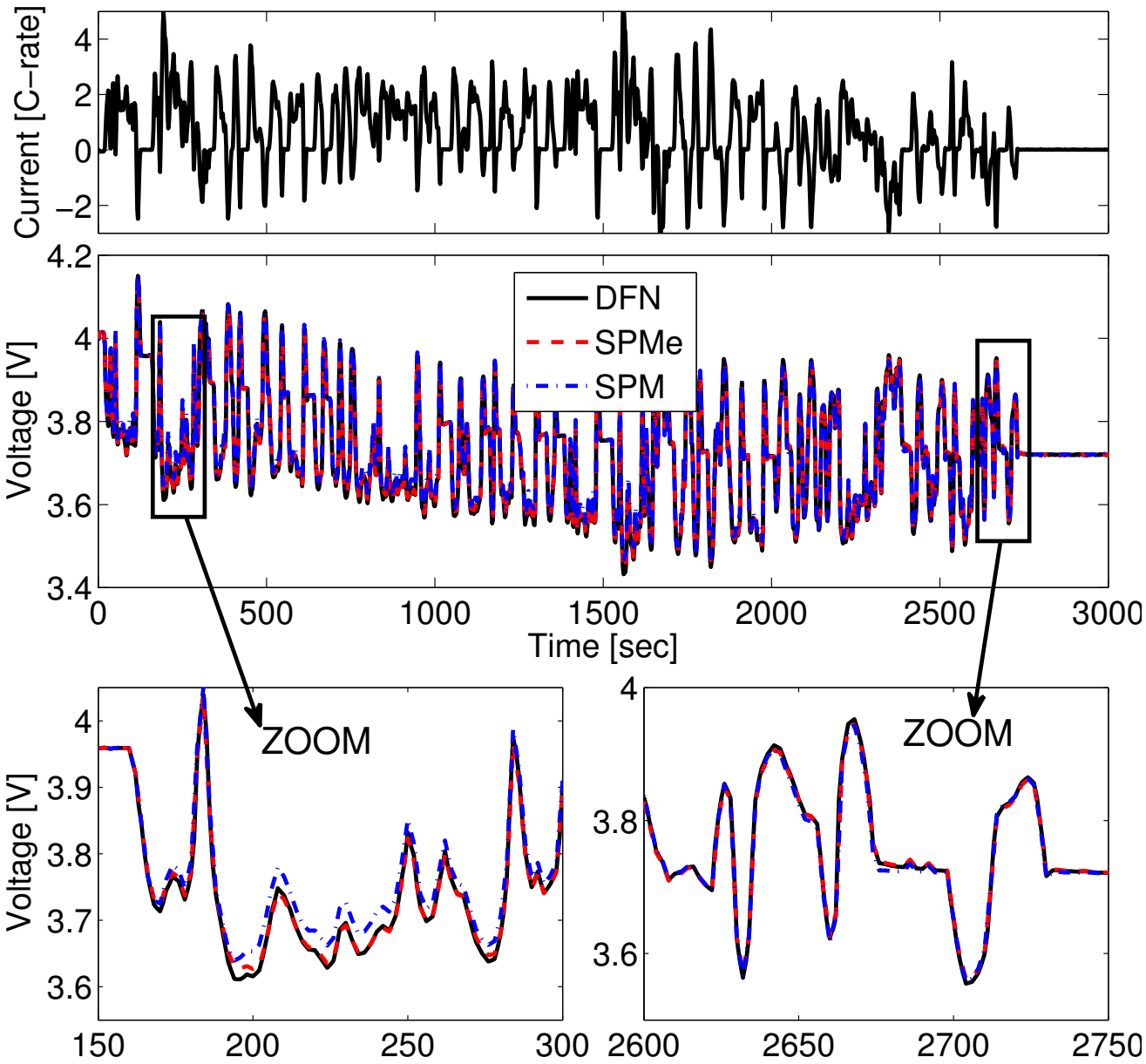
Applicable control theoretic tools:

- Nonlinear systems
- State estimation
- Adaptive control
- Fault Diagnostics
- PDE Control
- Model reduction

# Model Comparison



# Model Comparison



# Model Comparison

Table: RMS Voltage Error with respect to DFN Model

| | 0.1C | 0.5C | 1C | 2C | 5C | UDDSx2 |
|---|---|---|---|---|---|---|
| SPM | 2 mV | 8 mV | 17 mV | 31 mV | 72 mV | 14 mV |
| SPMe | 2 mV | 5 mV | 9 mV | 13 mV | 19 mV | 7 mV |